ASRock Industrial

AI MAX 300 BOX SERIES

User Manual

Version 1.1
Updated September 9, 2026
Copyright©2026 ASRockInd INC. All rights reserved.

Copyright Notice:

No part of this documentation may be reproduced, transcribed, transmitted, or translated in any language, in any form or by any means, except duplication of documentation by the purchaser for backup purpose, without written consent of ASRockInd Inc.

Products and corporate names appearing in this documentation may or may not be registered trademarks or copyrights of their respective companies, and are used only for identification or explanation and to the owners' benefit, without intent to infringe.

Disclaimer:

Specifications and information contained in this documentation are furnished for informational use only and subject to change without notice, and should not be constructed as a commitment by ASRockInd. ASRockInd assumes no responsibility for any errors or omissions that may appear in this documentation.

To the extent permitted by law, with respect to the contents of this documentation, ASRockInd does not provide warranty of any kind, either expressed or implied, including but not limited to the implied warranties or conditions of merchantability or fitness for a particular purpose. In no event shall ASRockInd, its directors, officers, employees, or agents be liable for any indirect, special, incidental, or consequential damages (including damages for loss of profits, loss of business, loss of data, interruption of business and the like), even if ASRockInd has been advised of the possibility of such damages arising from any defect or error in the documentation or product.

This device complies with Part 15 of the FCC Rules. Operation is subject to the following two conditions:

(1) this device may not cause harmful interference, and

(2) this device must accept any interference received, including interference that may cause undesired operation.

The terms HDMI® and HDMI High-Definition Multimedia Interface, and the HDMI logo are trademarks or registered trademarks of HDMI Licensing LLC in the United States and other countries.

HIGH-DEFINITION MULTIMEDIA INTERFACE

WARNING

THIS PRODUCT CONTAINS A BUTTON BATTERY
If swallowed, a button battery can cause serious injury or death.
Please keep batteries out of sight or reach of children.

Replaceable batteries

Be sure to turn off the power and then disconnect the power cords from your system before performing any installation or servicing. A sudden surge of power could damage sensitive electronic components.

CAUTION

RISK OF EXPLOSION IF BATTERY IS REPLACED BY AN INCORRECT TYPE.

DISPOSE OF USED BATTERIES ACCORDING TO THE INSTRUCTIONS

Button Battery Safety Notice

WARNING

- **INGESTION HAZARD:** This product contains a button cell or coin battery.
- **DEATH** or serious injury can occur if ingested.
- A swallowed button cell or coin battery can cause **Internal Chemical Burns** in as little as **2 hours**.
- **KEEP** new and used batteries **OUT OF REACH of CHILDREN**
- **Seek immediate medical attention** if a battery is suspected to be swallowed or inserted inside any part of the body.

- Remove and immediately recycle or dispose of used batteries according to local regulations and keep away from children. Do NOT dispose of batteries in household trash or incinerate.
- Even used batteries may cause severe injury or death.
- Call a local poison control center for treatment information.
- Battery type: CR2032
- Battery voltage: 3V
- Non-rechargeable batteries are not to be recharged.
- Do not force discharge, recharge, disassemble, heat above (manufacturer's specified temperature rating) or incinerate. Doing so may result in injury due to venting, leakage or explosion resulting in chemical burns.
- This product contains an irreplaceable battery.
- This icon indicates that a swallowed button battery can cause serious injury or death. Please keep batteries out of sight or reach of children.

CALIFORNIA, USA ONLY

The Lithium battery adopted on this motherboard contains Perchlorate, a toxic substance controlled in Perchlorate Best Management Practices (BMP) regulations passed by the California Legislature. When you discard the Lithium battery in California, USA, please follow the related regulations in advance.

"Perchlorate Material-special handling may apply, see www.dtsc.ca.gov/hazardouswaste/perchlorate"

AUSTRALIA ONLY

Our goods come with guarantees that cannot be excluded under the Australian Consumer Law. You are entitled to a replacement or refund for a major failure and compensation for any other reasonably foreseeable loss or damage caused by our goods. You are also entitled to have the goods repaired or replaced if the goods fail to be of acceptable quality and the failure does not amount to a major failure. If you require assistance please call ASRockInd Tel : +886-2-28965588 ext.123 (Standard International call charges apply)

CE

ASRockInd follows the green design concept to design and manufacture our products, and makes sure that each stage of the product life cycle of ASRockInd product is in line with global environmental regulations. In addition, ASRockInd disclose the relevant information based on regulation requirements.

DO NOT throw the motherboard in municipal waste. This product has been designed to enable proper reuse of parts and recycling. This symbol of the crossed out wheeled bin indicates that the product (electrical and electronic equipment) should not be placed in municipal waste. Check local regulations for disposal of electronic products.

CAUTION (or Warning)

Hot surface
Do not touch

This product should be connected to an outlet with a grounded connection via an external power cord.

Be sure to turn off the power and then disconnect the power cords from your system before performing any installation or servicing. A sudden surge of power could damage sensitive electronic components.

Contact Information

If you need to contact ASRock Industrial or want to know more about ASRock Industrial, you're welcome to visit ASRock Industrial's website at https://www.asrockind.com; or you may contact your dealer for further information.

ASRock Industrial Incorporation

Email: Info_ipc@asrockind.com

Contents

Chapter 1 Introduction **1**

1.1 Package Contents 1

1.2 Product Specifications 2

1.3 Block Diagram 4

Chapter 2 Product Overview **5**

2.1 Top View 5

2.2 Rear View 6

2.3 Inside View 8

Chapter 3 Hardware Installation **9**

3.1 How to Remove the Side Covers 9

3.2 How to Install the WiFi Module (Type 2230) 10

3.3 How to Install the M.2 SSD (Type 2280) into the M2_M1 Socket 11

3.4 How to Install the M.2 SSD (Type 2242) into the M2_M1 Socket 13

3.5 How to Install the M.2 SSD (Type 2280) into the M2_M2 Socket 15

3.6 How to Install the Handle 17

3.7 How to Install the Antennas 18

3.8 Position 19

Chapter 4 Motherboard **20**

4.1 Motherboard Layout 20

4.2 Jumpers Setup 23

4.3 Onboard Headers and Connectors 24

4.4 Expansion Slots (M.2 Slots) 28

Chapter 5 UEFI Setup Utility 29

5.1 Introduction 29

5.1.1 Entering BIOS Setup 29

5.1.2 UEFI Menu Bar 30

5.1.3 Navigation Keys 31

5.2 Main Screen 32

5.3 Advanced Screen 33

5.3.1 CPU Configuration 34

5.3.2 Chipset Configuration 35

5.3.3 Super IO Configuration 37

5.3.4 ACPI Configuration 38

5.3.5 USB Configuration 39

5.3.6 Trusted Computing 40

5.4 Hardware Health Event Monitoring Screen 42

5.5 Security Screen 44

5.6 Boot Screen 45

5.7 Exit Screen 46

Chapter 6 Software Support 47

6.1 Install Operating System 47

Chapter 1 Introduction

Because the hardware specifications might be updated, the content of this documentation will be subject to change without notice.

1.1 Package Contents

- 1 x AI MAX 300 BOX SERIES
- 1 x Power cord
- 1 x Handle Kit
- 2 x Antenna
- 1 x M.2 NUT
- 1 x Quick Installation Guide
- 1 x M.2 Heatsink Module
- 1 x M.2 Thermal Pad
- 2 x M.2 Screw

The barebone system does not include hard drive and M.2 SSD.
If any items are missing or appear damaged, contact your authorized dealer.

1.2 Product Specifications

Processor System

CPU	AMD Ryzen™ AI Max 300 Series (AMD Ryzen™ AI Max+395, 16C, Boost up to 5.1GHz)
Chipset	N/A
BIOS	2 x AMI SPI 256 Mbit* *This motherboard has two BIOS chips, a primary BIOS (BIOS1) and a redundant BIOS (BIOS2), which enhances the safety and stability of your system. Normally, the system will work on the primary BIOS (BIOS1). However, if the primary BIOS is corrupted or damaged, the system will recover from redundant BIOS (BIOS2) to primary BIOS BIOS1). When the system fails to recover, the redundant BIOS (BIOS2) will take over on the next system boot with warning message. For safety issues, users are not able to update the redundant BIOS (BIOS2) manually.

Memory

Technology	Onboard LPDDR5X, up to 8000 MT/s
Capacity	128GB

Graphics

Controller	AMD Radeon™ 8060S Graphics
HDMI	HDMI 2.1 Max resolution up to 7680x4320@60Hz
DisplayPort	DisplayPort 2.1 Max resolution up to 7680x4320@60Hz
MultiDisplay	Quad display (included 3 outputs from Type-C)

Expansion Slot

M.2/ WLAN	1 x Wi-Fi 7 802.11be+ BT 5.4

Audio

Interface	Realtek ALC897, High Definition Audio.

Ethernet

Controller/ Speed	LAN1: Marvell AQC113 with 10/100/1000/2500/5000/10000 Mbps LAN2: Realtek RTL8125BG with 10/100/1000/2500 Mbps
Connector	2 x RJ-45

Storage

M.2	1 x M.2 (Key M, 2242/2280) with PCIe Gen4 x4 for SSD 1 x M.2 (Key M, 2280) with PCIe Gen4 x4 for SSD
RAID	Supports RAID 0/1

English

Top I/O

USB	2 x USB2.0

Rear I/O

HDMI	2 x HDMI 2.1
Ethernet	1 x 10 Gigabit LAN 1 x 2.5 Gigabit LAN
USB	2 x USB4 (5V/3A, supports DP 2.1 output) 1 x USB 3.2 Gen2 (Type C ,5V/3A, supports DP 2.1 output) 2 x USB 3.2 Gen2
Audio	2 (Mic-In/Line-Out)

Watchdog Timer

Output	From Super I/O to drag RESETCON#
Interval	256 Segments, 0, 1, 2, ...255sec

Power Requirements

Power	AC INPUT (100-240V, 60-50Hz, 400W)
Power On	AT/ATX Supported - AT : Directly PWR on as power input ready - ATX : Press button to PWR on after power input ready

Environment

Operating Temp	0ºC ~ 40ºC
Storage Temp	-40° C – 85° C
Operating Humidity	5% ~ 90% (non-condensing)
Storage Humidity	5% ~ 90% (non-condensing)

Mechanical

Mounting	Aluminum housing
Dimensions (L x W x H)	200 x 100 x 232mm (7.87" x 3.94" x 9.13")
Weight	Net Weight: 2.8KG

Others

OS Support	Windows 11
TPM	TPM 2.0 onboard IC
Certifications	CE, FCC, BSMI
Packing list	1 x Power cord, 1 x Handle Kit, 2 x Antenna, 1 x M.2 NUT, 1 x QIG 1 x M.2 Heatsink Module, 1 x M.2 Thermal Pad, 2 x M.2 Screw

1.3 Block Diagram

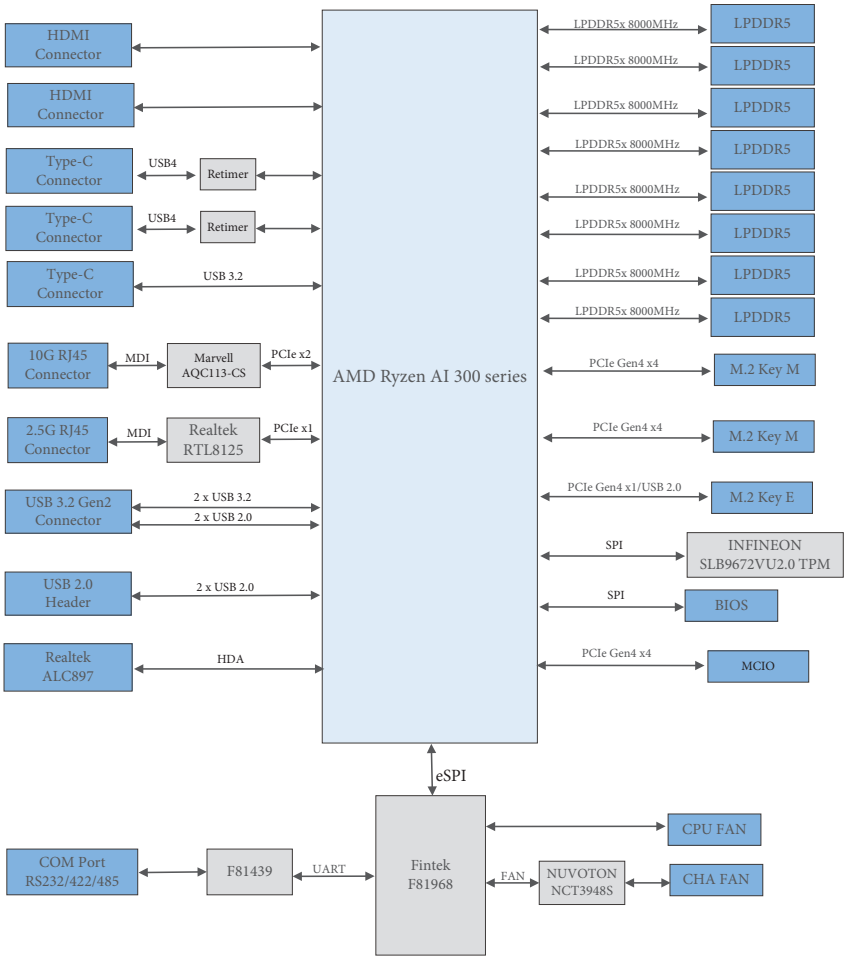

English

Chapter 2 Product Overview

This chapter provides diagrams showing the location of important components of the AI MAX 300 BOX SERIES.

2.1 Top View

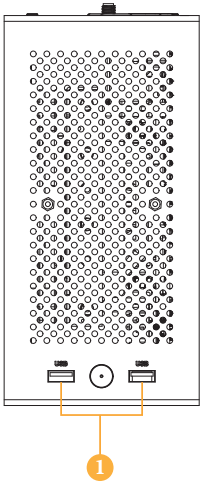

No.	Description
1	2 x USB 2.0

2.2 Rear View

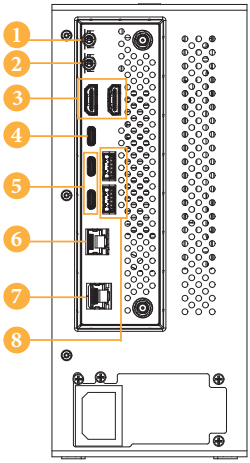

No.	Description
1	Line Out
2	Mic In
3	2 x HDMI 2.1
4	USB 3.2 Gen2 (Type-C, 5V/3A, supports DP 2.1 output)
5	2 x USB4 (Type-C, 5V/3A, supports DP 2.1 output)
6	LAN1: RJ-45 (10GbE)*
7	LAN2: RJ-45 (2.5GbE)**
8	2 x USB 3.2 Gen2 (Type-A)

** There are two LEDs on the LAN1 port. Please refer to the table below for the LAN2 port LED indications.*

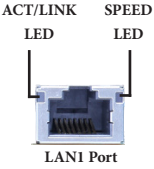

Activity / Link LED		Speed LED	
Status	Description	Status	Description
Off	No Link	Orange	10Mbps/100Mbps/ 1Gbps/2.5Gbps/5Gbps connection
Blinking	Data Activity		
On	Link	Green	10Gbps connection

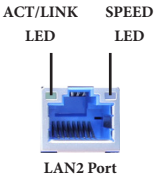

*** There are two LEDs on the LAN2 port. Please refer to the table below for the LAN1 port LED indications.*

Activity / Link LED		Speed LED	
Status	**Description**	**Status**	**Description**
Off	No Link	Off	10Mbps connection
Blinking	Data Activity	Orange	100Mbps/1Gbps connection
On	Link	Green	2.5Gbps connection

2.3 Inside View

Left Side Panel Opened

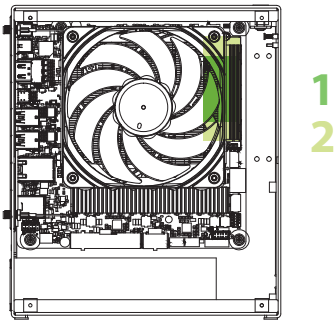

Right Side Panel Opened

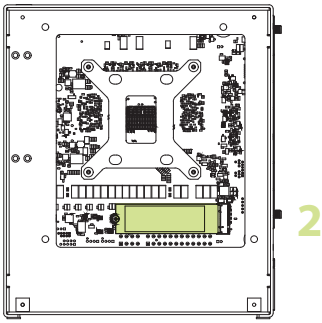

No.	Description
1	WiFi Module Slot (2230)
2	Left side panel: M.2 SSD slot (2242/2280) Right side panel: M.2 SSD slot (2280)

M.2 is not included with this system.

Chapter 3 Hardware Installation

This chapter helps you install or remove important components.

Be sure to turn off the power and then disconnect the power cords from your system before performing any installation or servicing. A sudden surge of power could damage sensitive electronic components.

3.1 How to Remove the Side Covers

1. Remove the four screws on the side cover.
2. Then lift up and remove the side cover.

Left Side Cover Removed

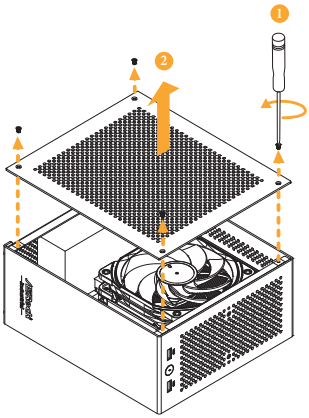

Right Side Cover Removed

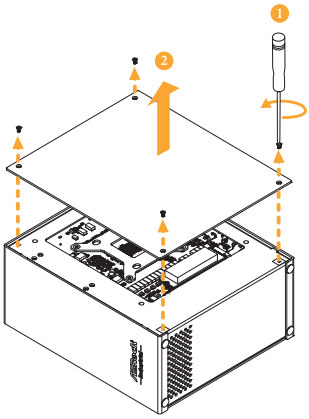

3.2 How to Install the WiFi Module (Type 2230)

1. Locate the WiFi Module slot on the motherboard.

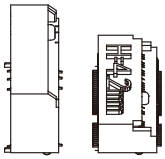

2. Carefully insert the WiFi Module into the slot at a 30-degree angle.

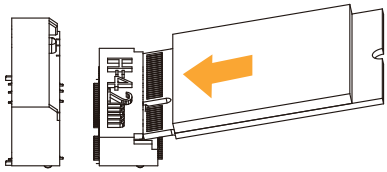

3. Tighten the screw to secure the WiFi Module to the motherboard.

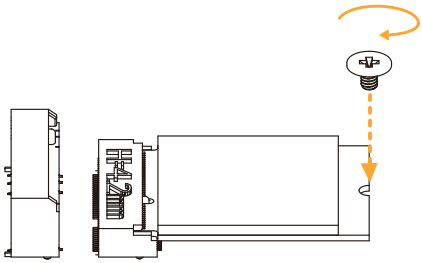

3.3 How to Install the M.2 SSD (Type 2280) into the M2_M1 Socket

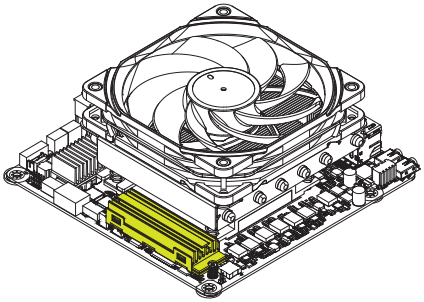

1. Gently insert the M.2 module, along the guiding tabs, into the heatsink bracket.

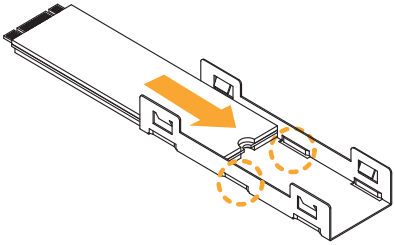

2. Remove the membrane from the M.2 thermal pad and attach it to the heatsink. Align the heatsink with the bracket edge and press it into the bracket.

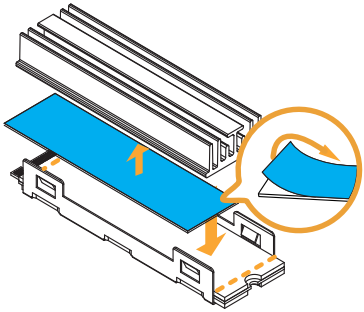

3. Carefully insert the M.2 Module with heatstink into the slot at a 30-degree angle.

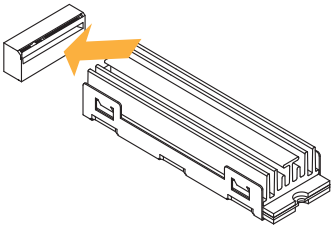

4. Tighten the screw to secure the M.2 module and the heatsink to the motherboard.

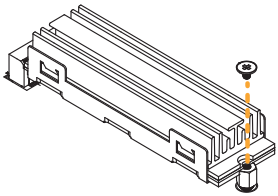

3.4 How to Install the M.2 SSD (Type 2242) into the M2_M1 Socket

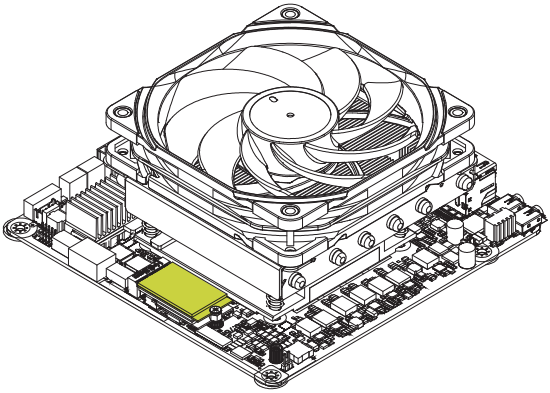

1. Remove the screw secured to the Key E.

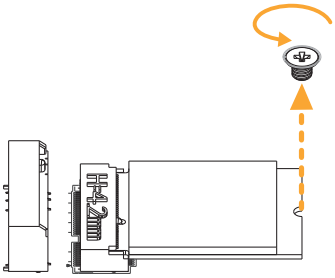

2. Screw the nut into the Key E mounting hole.

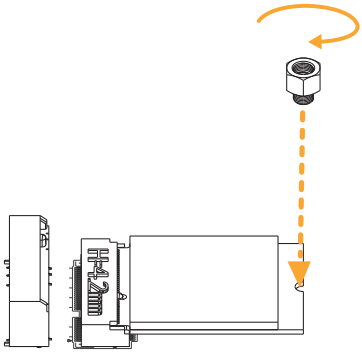

3. Carefully insert the M.2 SSD (Type 2242) into the Key M slot at a 30-degree angle. Then tighten the screw to secure the M.2 SSD (Type 2242) to the nut.

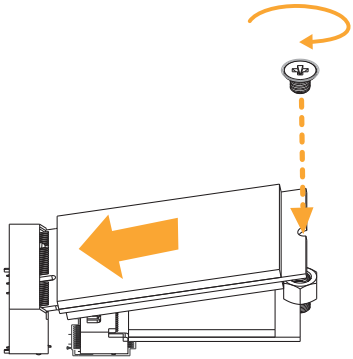

3.5 How to Install the M.2 SSD (Type 2280) into the M2_M2 Socket

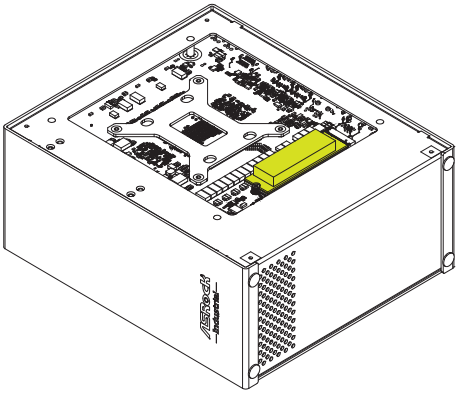

1. Locate the M.2 slot on the motherboard.

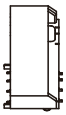

2. Carefully insert the M.2 SSD into the slot at a 30-degree angle.

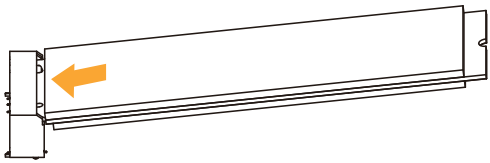

3. Tighten the screw to secure the M.2 SSD to the motherboard.

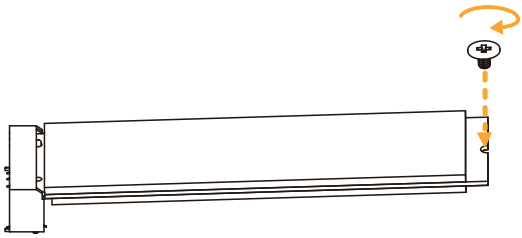

4. Paste the thermal pad onto the M.2 SSD. Then remove the membrane.

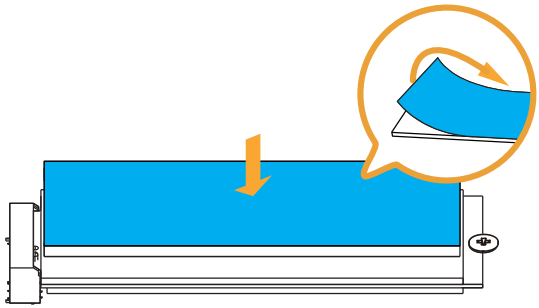

3.6 How to Install the Handle

1. Secure the handle to the front panel with two M3×12 screws. Ensure the screws are firmly tightened.

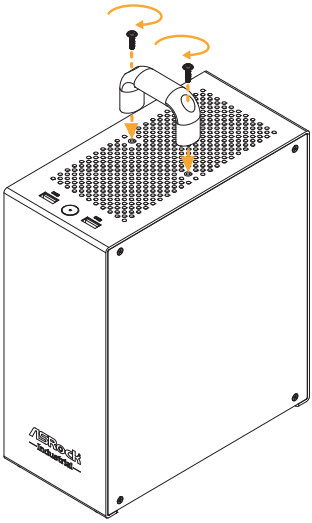

2. The handle is installed.

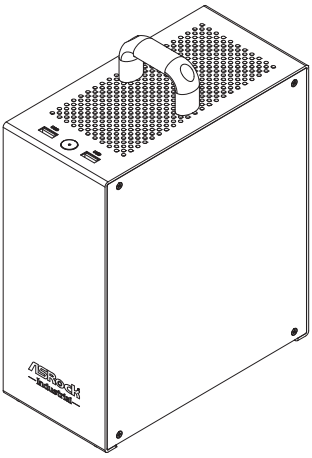

3.7 How to Install the Antennas

1. Align the antennas with the antenna connectors and screw them on until fully tightened.

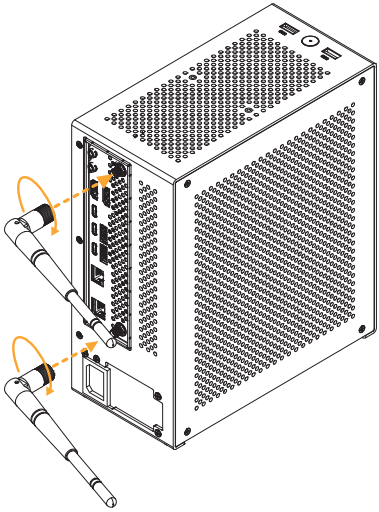

2. The antennas are installed.

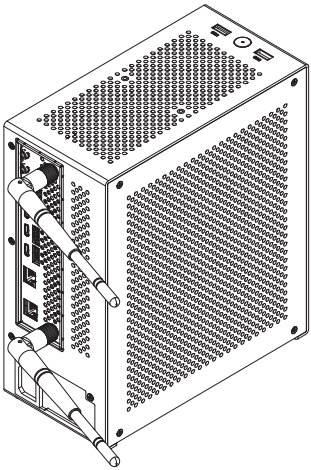

3.8 Position

The AI MAX 300 BOX SERIES can be placed in vertical position only.

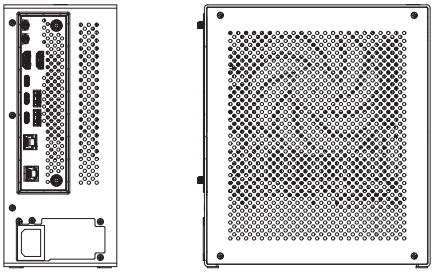

Please note that keeping the AI MAX 300 BOX SERIES in a vertical position will ensure better cooling performance.

Chapter 4 Motherboard

4.1 Motherboard Layout

Top:

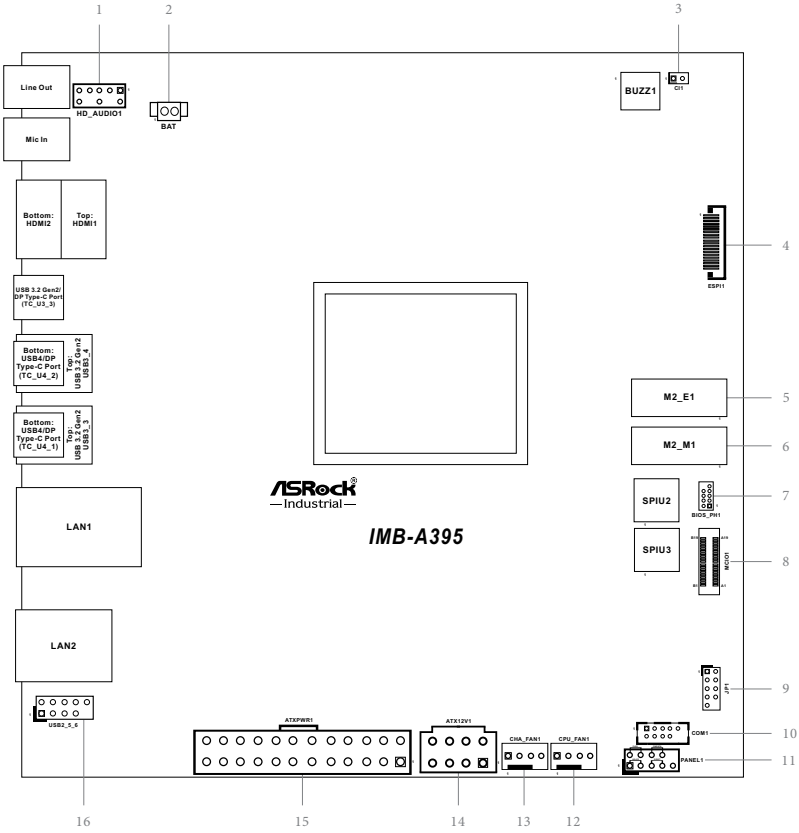

English

Bottom:

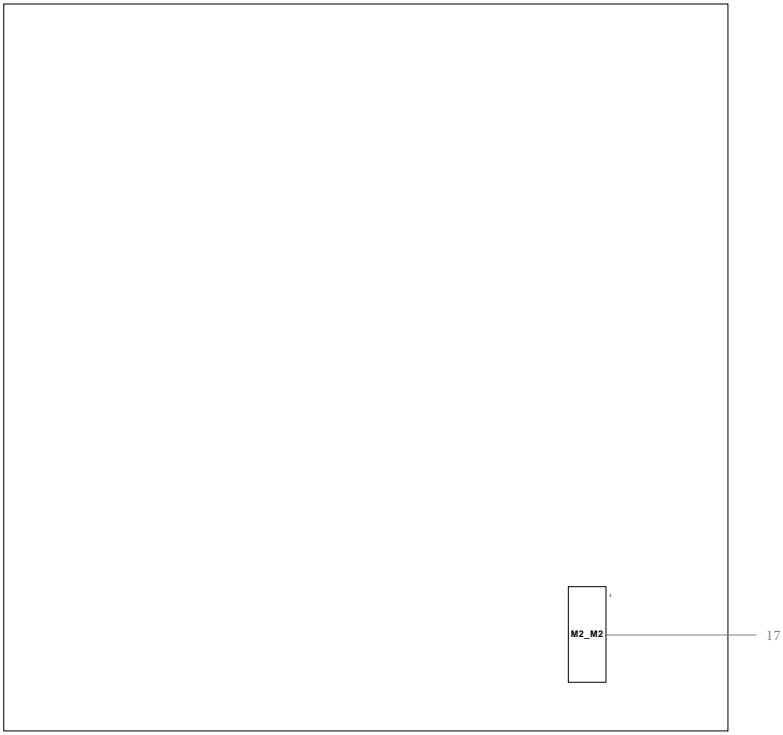

1 : Front Panel Audio Header (HD_AUDIO1)
2 : Battery Connector (BAT1)
3 : Chassis Intrusion Header (CI1)
4 : ESPI Header (ESPI1)
5 : M.2 Key-E Socket (M2_E1)
6 : M.2 Key-M Socket (M2_M1)
7 : BIOS_PH1
8 : MCIO Connector (MCIO1)
9 : JP1
10 : COM Port Header (COM1) (RS-232/422/485)
11 : System Panel Header (PANEL1)
12 : CPU FAN Connector (+12V) (CPU_FAN1)
13 : Chassis FAN Connector (+12V) (CHA_FAN1)
14 : 8-pin ATX 12V Power Connector (ATX12V1)
15 : 24-pin ATX Power Input Connector (ATXPWR1)
16 : USB 2.0 Header (USB2_5_6)

Backside:
17 : M.2 Key-M Socket (M2_M2)

4.2 Jumpers Setup

The illustration shows how jumpers are setup. When the jumper cap is placed on pins, the jumper is "Short." If no jumper cap is placed on pins, the jumper is "Open." The illustration shows a 3-pin jumper whose pin1 and pin2 are "Short" when jumper cap is placed on these 2 pins.

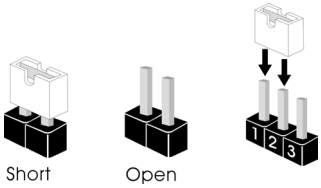

Chassis Intrusion Header
(2-pin CI1)
(see p. 20, No. 3)

Setting	Description
Open	Normal (Default)
Short	Active Case Open

This motherboard supports CASE OPEN detection feature that detects if the chassis cover has been removed. This feature requires a chassis with chassis intrusion detection design.

JP1
(9-pin JP1)
(see p. 20, No. 9)

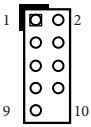

Setting	Description
JP1_12	Open: AT Mode Short: ATX mode (Default)
JP1_34	CMOS Normal (Default)
JP1_46	Clear CMOS

English

4.3 Onboard Headers and Connectors

Onboard headers and connectors are NOT jumpers. Do NOT place jumper caps over these headers and connectors. Placing jumper caps over the headers and connectors will cause permanent damage to the motherboard!

Front Panel Audio Header

(8-pin HD_AUDIO1)

(see p. 20, No. 1)

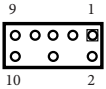

Pin	Signal Name	Signal Name	Pin
1	MIC2_L	GND	2
3	MIC2_R		4
5	OUT2_R	MIC_RET	6
7	J_SENSE		8
9	OUT2_L	OUT_RET	10

This is line out/microphone interface for front panel audio cable that allows jack detection, convenient connection and control of audio devices.

Battery Connector

(2-pin BAT1)

(see p. 20, No. 2)

Pin	Signal Name
1	+BAT
2	GND

ESPI Header

(20-pin ESPI1)

(see p. 20, No. 4)

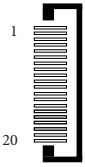

Pin	Signal Name
1	GND
2	ESPI_CLK
3	GND
4	ESPI_CS#
5	ESPI_RESET#
6	GND
7	+3V
8	GND
9	SMB_CLK
10	SMB_DATA
11	ESPI_IO0
12	ESPI_IO1
13	ESPI_IO2
14	ESPI_IO3
15	GND
16	+3VSB
17	Internal Use
18	Internal Use
19	ESPI_ALERT#
20	GND

BIOS_PH1

(9-pin BIOS_PH1)

(see p. 20, No. 7)

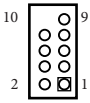

Pin	Signal Name	Signal Name	Pin
1	SPI_CS#	+1.8VSB	2
3	SPI_MISO	SPI_HOLD#	4
5	SPI_WP#	SPI_CLK	6
7	RSMRST#	SPI_MOSI	8
9	GND		10

COM Port Header (RS-232/422/485)*

(9-pin COM1)

(see p. 20, No. 10)

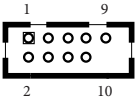

Pin	Signal Name	Signal Name	Pin
1	DDCD#	RRXD	2
3	TTXD	DDTR#	4
5	GND	DDSR#	6
7	RRTS#	CCTS#	8
9	NA		10

There is one 2.00mm-pitch COM port header (COM1) on the motherboard, and the header supports RS232/422/485.

** This motherboard supports RS232/422/485 on COM1 port. Please refer to the table below for the pin definition. In addition, COM1 port (RS232/422/485) can be adjusted by Jumper Setting. You may refer to our user manual for details.*

COM1 Port Pin Definition

Pin	RS232	RS422	RS485
1	DCD	TX-	RTX-
2	RXD	TX+	RTX+
3	TXD	RX+	NA
4	DTR	RX-	NA
5	GND	GND	GND
6	DSR	NA	NA
7	RTS	NA	NA
8	CTS	NA	NA
9	NA	NA	NA
10	NA	NA	NA

System Panel Header

(9-pin PANEL1)

(see p. 20, No. 11)

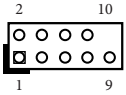

Pin	Signal Name	Signal Name	Pin
1	HDLED+	PLED+	2
3	HDLED-	PLED-	4
5	GND	PWRBTN#	6
7	RESET#	GND	8
9	+5VSB		10

This header accommodates several system front panel functions.

Connect the power switch, reset switch and system status indicator on the chassis to this header according to the pin assignments below. Note the positive and negative pins before connecting the cables.

PWRBTN (Power Switch):
Connect to the power switch on the chassis front panel. You may configure the way to turn off your system using the power switch.
RESET (Reset Switch):
Connect to the reset switch on the chassis front panel. Press the reset switch to restart the computer if the computer freezes and fails to perform a normal restart.
PLED (System Power LED):
Connect to the power status indicator on the chassis front panel. The LED is on when the system is operating. The LED keeps blinking when the sys-tem is in S1 sleep state. The LED is off when the system is in S3/S4 sleep state or powered off (S5).
HDLED (Hard Drive Activity LED):
Connect to the hard drive activity LED on the chassis front panel. The LED is on when the hard drive is reading or writing data.

The front panel design may differ by chassis. A front panel module mainly consists of power switch, reset switch, power LED, hard drive activity LED, speaker and etc. When connecting your chassis front panel module to this header, make sure the wire assignments and the pin assignments are matched correctly.

CPU Fan Connector (+12V)

(4-pin CPU_FAN1)

(see p. 20, No. 12)

Pin	Signal Name
1	GND
2	+12V
3	CPU_FAN_SPEED
4	FAN_SPEED_CONTROL

The board offers one 4-pin CPU fan (Smart Fan) connector which is compatible with 3-pin CPU fan. If you connect a 3-pin CPU fan to the CPU fan connector on this motherboard, please connect it to pin 1-3. The maximum current is 1A.

Chassis Fan Connector (+12V)

(4-pin CHA_FAN1)

(see p. 20, No. 13)

Pin	Signal Name
1	GND
2	+12V
3	CHA_FAN_SPEED
4	FAN_SPEED_CONTROL

The board offers one 4-pin chassis fan (Smart Fan) connector which is compatible with 3-pin chassis fan. If you connect a 3-pin chassis fan to the chassis fan connector on this motherboard, please connect it to pin 1-3. The maximum current is 1A.

8-pin ATX 12V Power Connector

(84-pin ATX12V1)

(see p. 20, No. 14)

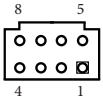

Pin	Signal Name	Signal Name	Pin
1	GND	ATX12V	5
2	GND	ATX12V	6
3	GND	ATX12V	7
4	GND	ATX12V	8

This motherboard provides one 8-pin ATX 12V power connectors. To use a 4-pin ATX power supply, please plug it along Pin 1 and Pin 5.

24-pin ATX Power Input Connector

(24-pin ATXPWR1)

(see p. 6, No. 15)

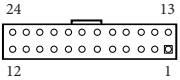

Pin	Signal Name	Signal Name	Pin
1	+3V	+3V	13
2	+3V	-12V	14
3	GND	GND	15
4	+5V	PSON#	16
5	GND	GND	17
6	+5V	GND	18
7	GND	GND	19
8	PWROK_PS	NA	20
9	ATX+5VSB	+5V	21
10	+12V	+5V	22
11	+12V	+5V	23
12	+3V	GND	24

This motherboard provides a 24-pin ATX power connector. To use a 20-pin ATX power supply, please plug it along Pin 1 and Pin 13.

USB 2.0 Header

(9-pin USB2_5_6)

(see p. 20, No. 16)

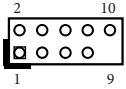

Pin	Signal Name	Signal Name	Pin
1	USB_PWR	USB_PWR	2
3	USB_D-	USB_D-	4
5	USB_D+	USB_D+	6
7	GND	GND	8
9		DUMMY	10

The board provides one internal 2.54mm pitch header, which can support two USB 2.0 ports. The maximum current per port is 0.5A.

4.4 Expansion Slots (M.2 Slots)

There are three M.2 sockets and one MCIO connector on this motherboard.

M.2 sockets: 1 x M.2 (Key E, 2230) with PCIe Gen4 x1 and USB 2.0 for wireless modules.
1 x M.2 (Key M, 2242/2280) with PCIe Gen4 x4 for SSD.
1 x M.2 (Key M, 2280) with PCIe Gen4 x4 for SSD.

MCIO connector: 1 x MCIO connector supporting PCIe Gen4 x4 link for external PCIe-based expansion modules.

M.2 Key-E Socket (M2_E1)

Pin	Signal Name	Signal Name	Pin
1	GND	+3.3V	2
3	USB_D+	+3.3V	4
5	USB_D-	NA	6
7	GND	NA	8
9	NA	NA	10
11	NA	NA	12
13	NA	NA	14
15	NA	NA	16
17	NA	GND	18
19	NA	NA	20
21	NA	NA	22
23	NA		
		NA	32
33	GND	NA	34
35	PETp	NA	36
37	PETn	NA	38
39	GND	NA	40
41	PERp	NA	42
43	PERn	NA	44
45	GND	NA	46
47	PEFCLKp	NA	48
49	PEFCLKn	NA	50
51	GND	PERST0#	52
53	CLKREQ#	W_DISABLE1#	54
55	NA	W_DISABLE2#	56
57	GND	NA	58
59	NA	NA	60
61	NA	NA	62
63	GND	NA	64
65	NA	NA	66
67	NA	NA	68
69	GND	NA	70
71	NA	+3.3V	72
73	NA	+3.3V	74
75	GND		

M.2 Key-M Sockets (M2_M1, M2_M2)

Pin	Signal Name	Signal Name	Pin
1	GND	+3.3V	2
3	GND	+3.3V	4
5	PERn3	NA	6
7	PERp3	NA	8
9	GND	HDLED	10
11	PETn3	+3.3V	12
13	PETp3	+3.3V	14
15	GND	+3.3V	16
17	PERn2	+3.3V	18
19	PERp2	NA	20
21	GND	NA	22
23	PETn2	NA	24
25	PETp2	NA	26
27	GND	NA	28
29	PERn1	NA	30
31	PERp1	NA	32
33	GND	NA	34
35	PETn1	NA	36
37	PETp1	NA	38
39	GND	NA	40
41	PERn0	NA	42
43	PERp0	NA	44
45	GND	NA	46
47	PETn0	NA	48
49	PETP0	PERST#	50
51	GND	CLKREQ#	52
53	PEFCLKn	NA	54
55	PEFCLKp	NA	56
57	GND	NA	58
67	NA	NA	68
69	NA	+3.3V	70
71	GND	+3.3V	72
73	GND	+3.3V	74
75	GND		

MCIO Connector (MCIO1)

Pin	Signal Name	Signal Name	Pin
A1	GND	GND	B1
A2	RX 0+	TX 0+	B2
A3	RX 0-	TX 0-	B3
A4	GND	GND	B4
A5	RX 1+	TX 1+	B5
A6	RX 1-	TX 1-	B6
A7	GND	GND	B7
A8	BP_TYPE	SCL1	B8
A9	WAKE1	SDA1	B9
A10	GND	GND	B10
A11	CLK1+	PERST1	B11
A12	CLK1-	Presense	B12
A13	GND	GND	B13
A14	RX 2+	TX 2+	B14
A15	RX 2-	TX 2-	B15
A16	GND	GND	B16
A17	RX 3+	TX 3+	B17
A18	RX 3-	TX 3-	B18
A19	GND	GND	B19

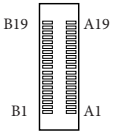

English

Chapter 5 UEFI Setup Utility

5.1 Introduction

ASRock Industrial UEFI (Unified Extensible Firmware Interface) is a BIOS utility which offers tweak-friendly options in an advanced viewing interface. The UEFI system works with a USB mouse and offers users a faster, sleeker experience.

This BIOS utility can perform the Power-On Self-Test (POST) during system startup, record hardware parameters of the system, load operating system, and so on. The battery on the motherboard supplies the power needed to the CMOS when the system power is turned off, and the values configured in the UEFI utility are kept in the CMOS.

Please note that inadequate BIOS settings may cause system instability, mulfunction or boot failure. We strongly recommend that you do not alter the UEFI default configurations or change the settings only with the assistance of a trained service person.

If the system becomes unstable or fails to boot after you change the setting, try to clear the CMOS values and reset the board to default values. See your motherboard manual for instructions.

5.1.1 Entering BIOS Setup

You may run the UEFI SETUP UTILITY by pressing <F2> or <Delete> right after you power on the computer; otherwise, the Power-On-Self-Test (POST) will continue with its test routines. If you wish to enter the UEFI SETUP UTILITY after POST, restart the system by pressing <Ctl> + <Alt> + <Delete>, or by pressing the reset button on the system chassis. You may also restart by turning the system off and then back on.

This setup guide explains how to use the UEFI SETUP UTILITY to configure all the supported system. The screenshots in this manual are for reference only. UEFI Settings and options may vary owing to different BIOS release versions or CPU installed. Please refer to the actual BIOS version of the motherboard you purchased for detailed screens, settings and options.

5.1.2 UEFI Menu Bar

The top of the screen has a menu bar with the following selections:

Main	For setting system time/date information
Advanced	For advanced system configurations
H/W Monitor	Displays current hardware status
Security	For security settings
Boot	For configuring boot settings and boot priority
Exit	Exit the current screen or the UEFI Setup Utility

Because the UEFI software is constantly being updated, the following UEFI setup screens and descriptions for reference purpose only, and may vary from the latest BIOS and do not exactly match what you see on your screen.

5.1.3 Navigation Keys

Use < ← > key or < → > key to choose among the selections on the menu bar, and use < ↑ > key or < ↓ > key to move the cursor up or down to select items, then press <Enter> to get into the sub screen. You can also use the mouse to click your required item.

Please check the following table for the descriptions of each navigation key.

Navigation Key(s)	Description
+ / -	To change option for the selected items
<Tab>	Switch to next function
<PGUP>	Go to the previous page
<PGDN>	Go to the next page
<HOME>	Go to the top of the screen
<END>	Go to the bottom of the screen
<F1>	To display the General Help Screen
<F7>	Discard changes and exit the SETUP UTILITY
<F9>	Load optimal default values for all the settings
<F10>	Save changes and exit the SETUP UTILITY
<F12>	Print screen
<ESC>	Jump to the Exit Screen or exit the current screen

5.2 Main Screen

When you enter the UEFI SETUP UTILITY, the Main screen will appear and display the system overview.

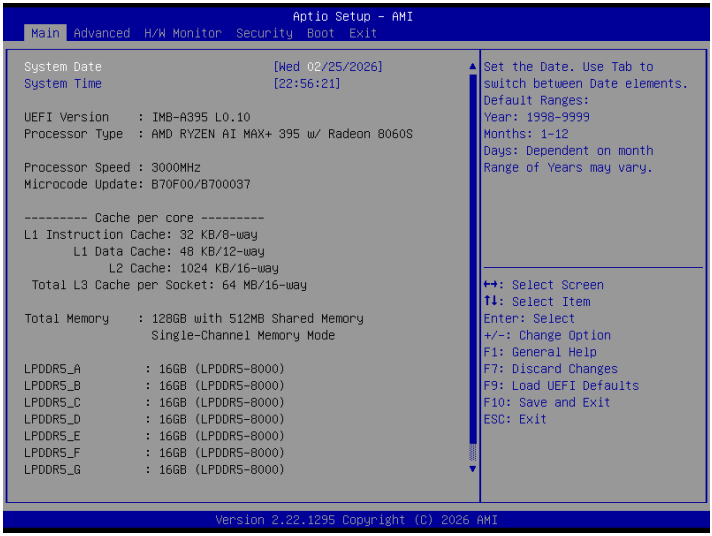

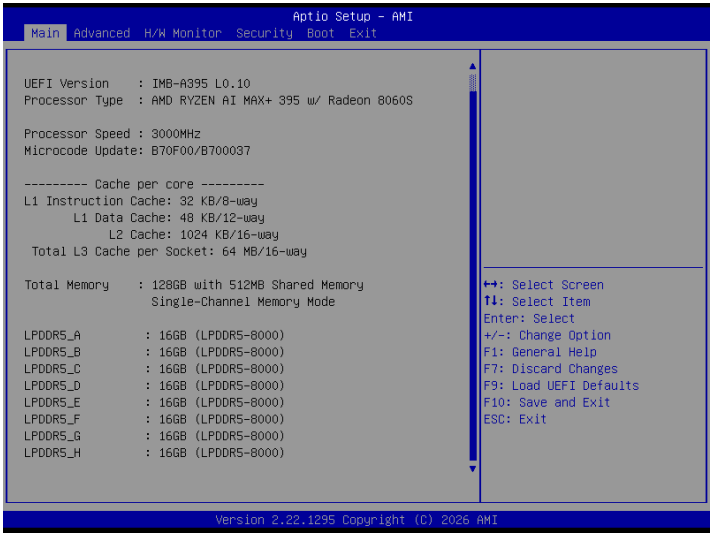

Because the UEFI software is constantly being updated, the following UEFI setup screens and descriptions are for reference purpose only, and they may not exactly match what you see on your screen. Options may also vary depending on the features of your motherboard.

English

5.3 Advanced Screen

In this section, you may set the configurations for the following items: CPU Configuration, Chipset Configuration, Super IO Configuration, ACPI Configuration, USB Configuration, and Trusted Computing.

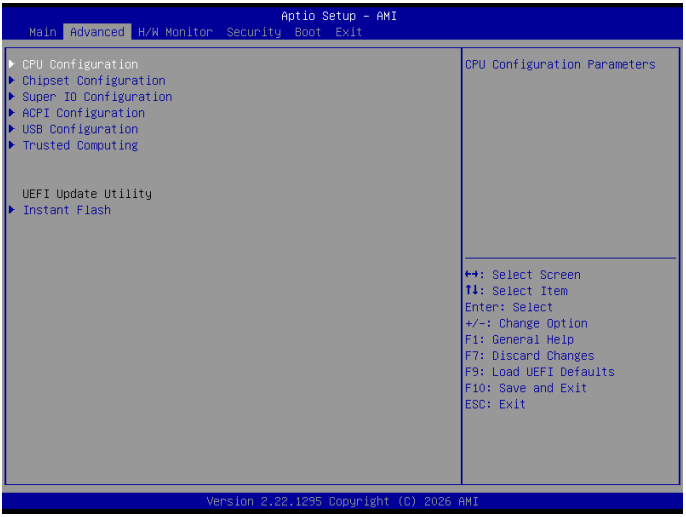

Setting wrong values in this section may cause the system to malfunction.

Instant Flash

Instant Flash is a UEFI flash utility embedded in Flash ROM. This convenient UEFI update tool allows you to update system UEFI without entering operating systems first like Windows®. Just launch this tool and save the new UEFI file to your USB flash drive, floppy disk or hard drive, and then you can update your UEFI in only a few clicks without preparing an additional floppy diskette or other complicated flash utility. Please be noted that the USB flash drive or hard drive must use FAT32/16/12 file system. If you execute Instant Flash utility, the utility will show the UEFI files and their respective information. Select the proper UEFI file to update your UEFI, and reboot your system after UEFI update process completes.

5.3.1 CPU Configuration

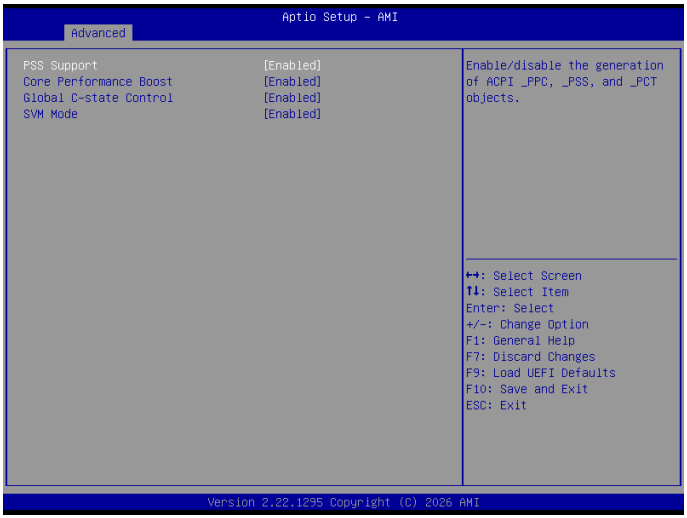

PSS Support

Enable/disable the generation of ACPI _PPC, _PSS, and _PCT objects.

Core Performance Boost

Core Performance Boost controls whether the processor transitions to a higher frequency than the processor's rated speed if the processor has available power and is within temperature specifications. The default value is [Enabled].

Global C-state Control

Enable/Disable Global C-state Control.

SVM Mode

When this is set to [Enabled], a VMM (Virtual Machine Architecture) can utilize the additional hardware capabilities provided by AMD-V. The default value is [Enabled]. Configuration options: [Enabled] and [Disabled].

5.3.2 Chipset Configuration

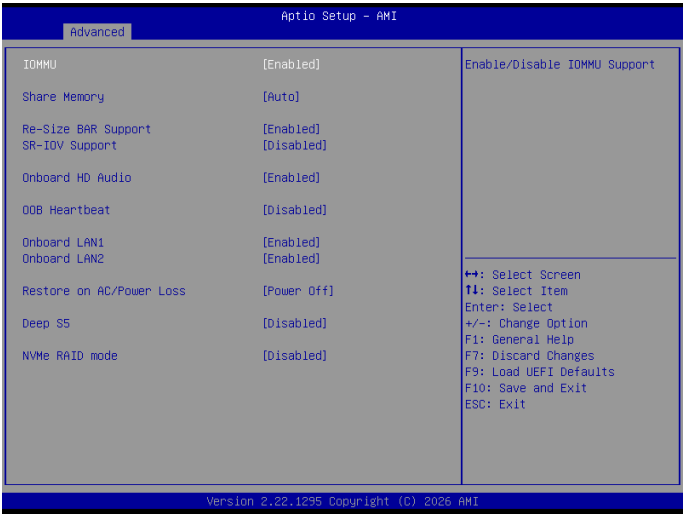

IOMMU

Enable/Disable IOMMU Support.

Share Memory

Share memory allows you to configure the size of memory that is allocated to the integrated graphics processor when the system boots up.

Configuration options: [512M] [1G] [2G] [4G] [8G] [16G] [32G] [48G] [64G] [96G] [Auto]
Options vary depending on the memory you use on your motherboard.

Re-Size BAR Support

If system has Resizable BAR capable PCIe Devices, this option enables or disables Resizable BAR Support.

SR-IOV Support

If system has SR-IOV capable PCIe Devices, this option Enables or Disables Single Root IO Virtualization Support.

Configuration options: [Enabled] [Disabled]

Onboard HD Audio

Onboard HD Audio allows you to enable or disable the onboard HD audio controller. Set this item to [Auto] to enable the onboard HD and automatically disable it when a sound card is installed.

Configuration options: [Enabled] [Disabled]

OOB Heartbeat

The OOB Heartbeat option is a specialized monitoring feature designed for industrial and remote management environments.

How it works: When enabled, the system continuously sends a heartbeat signal.

Please pair with OOBM card for function enablement.

Onboard LAN1

This allows you to enable or disable the Onboard LAN1 feature.

Onboard LAN2

This allows you to enable or disable the Onboard LAN2 feature.

Restore on AC/Power Loss

The option allows you to select the power state after a power failure.

[Power Off] sets the power to remain off when the power recovers.

[Power On] sets the system to start to boot up when the power recovers.

Deep S5

Mobile platforms support Deep S5 in DC only and desktop platforms support Deep S5 in AC only. The default value is [Disabled].

Configuration options: [Auto] [Disabled]

NVMe RAID mode

Enable or disable NVMe RAID mode.

5.3.3 Super IO Configuration

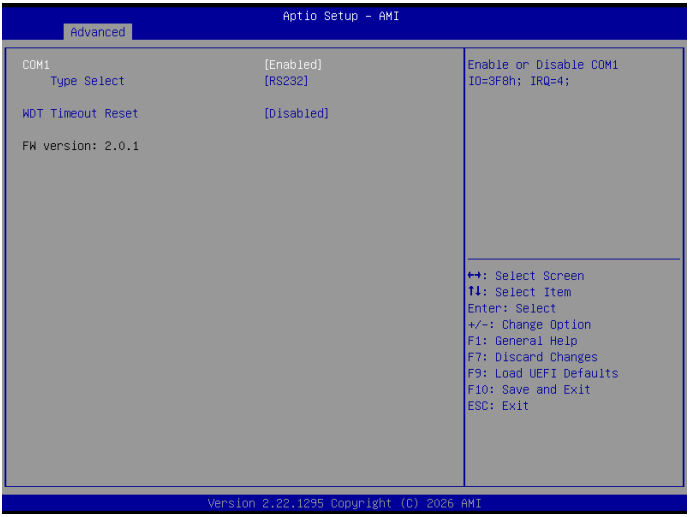

COM1

Use this to set parameters of COM1.

Type Select

Use this to select COM1 port type: [RS232], [RS422] or [RS485].

WDT Timeout Reset

Use this to set the Watch Dog Timer.

5.3.4 ACPI Configuration

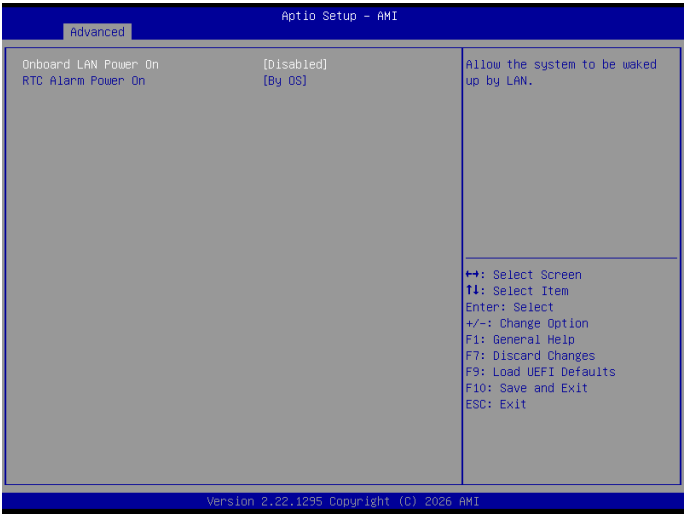

Onboard LAN Power On

Use this item to enable or disable onboard LAN to turn on the system from the power-soft-off mode.

Configuration options: [Enabled] [Disabled]

RTC Alarm Power On

RTC Alarm Power On allows the system to be waked up by the real time clock alarm. Set it to By OS to let it be handled by your operating system.

Configuration options: [Enabled] [Disabled] [By OS]

5.3.5 USB Configuration

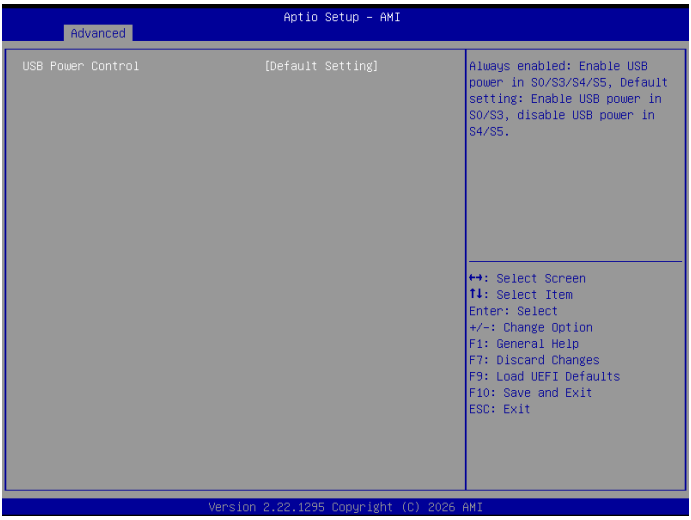

USB Power Control

Use this option to control USB power.

5.3.6 Trusted Computing

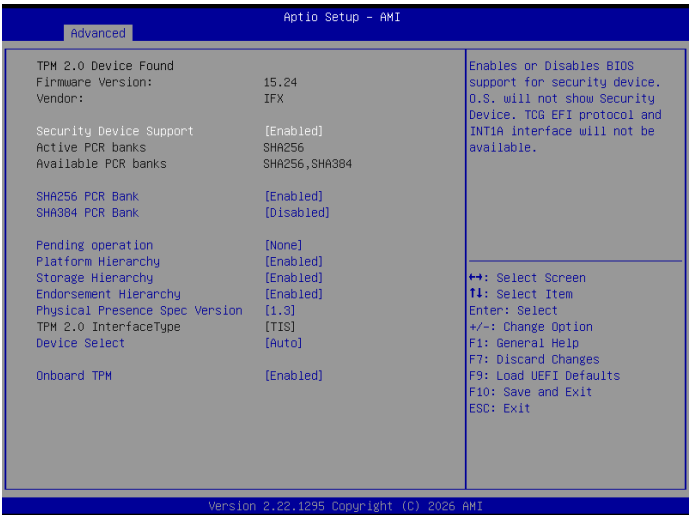

NOTE: Options vary depending on the version of your connected TPM module.

Security Device Support

Security Device Support allows you to enable or disable BIOS support for security device. O.S. will not show Security Device. TCG EFI protocol and INT1A interface will not be available.

Configuration options: [Enabled] [Disabled]

Active PCR banks

This item displays active PCR Banks.

Available PCR Banks

This item displays available PCR Banks.

SHA256 PCR Bank

SHA256 PCR Bank allows you to enable or disable SHA256 PCR Bank.

Configuration options: [Enabled] [Disabled]

SHA384 PCR Bank

SHA384 PCR Bank allows you to enable or disable SHA384 PCR Bank.

Configuration options: [Enabled] [Disabled]

Pending Operation

Pending Operation allows you to schedule an Operation for the Security Device.

NOTE: Your computer will reboot during restart in order to change State of the Device.

Configuration options: [None] [TPM Clear]

Platform Hierarchy

This item allows you to enable or disable Platform Hierarchy.

Configuration options: [Enabled] [Disabled]

Storage Hierarchy

This item allows you to enable or disable Storage Hierarchy.

Configuration options: [Enabled] [Disabled]

Endorsement Hierarchy

This item allows you to enable or disable Endorsement Hierarchy.

Configuration options: [Enabled] [Disabled]

Physical Presence Spec Version

Select this item to tell OS to support PPI spec version 1.2 or 1.3. Please note that some HCK tests might not support version 1.3.

Configuration options: [1.2] [1.3]

TPM 2.0 InterfaceType

This item allows you to view the Communication Interface to TPM 2.0 Device: CRB or ITS.

Device Select

This item allows you to select the TPM device to be supported.

[TPM 1.2] restricts support to TPM 1.2 devices.

[TPM 2.0] restricts support to TPM 2.0 devices.

[Auto] supports both TPM 1.2 and TPM 2.0 devices with the default set to TPM 2.0 devices. If TPM 2.0 devices are not found, TPM 1.2 devices will be enumerated.

Onboard TPM

Enable or disable the onboard TPM interface controller.

5.4 Hardware Health Event Monitoring Screen

This section allows you to monitor the status of the hardware on your system, including the parameters of the CPU temperature, motherboard temperature, CPU fan speed, chassis fan speed, and the critical voltage.

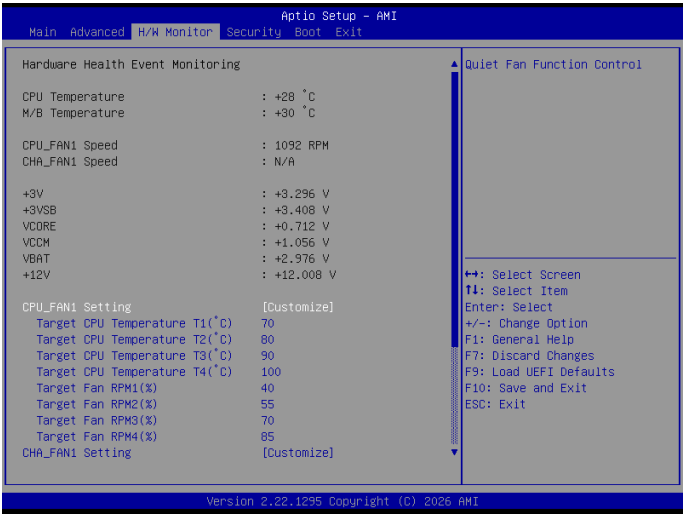

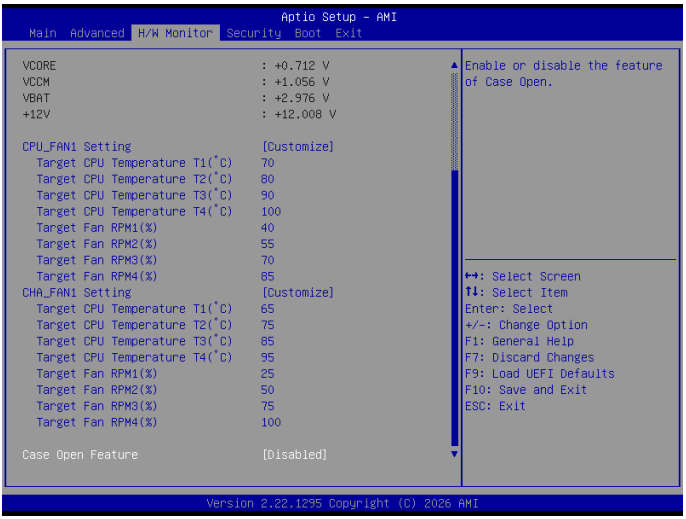

English

NOTE: Options vary depending on the features of your motherboard.

CPU_Fan 1 Setting

This item allows you to select a fan mode for CPU Fan 1. The default value is [Customize]. Configuration options: [Full On] [Customize].

CHA_Fan 1 Setting

This allows you to set chassis fan 1's speed. The default value is [Customize].

Configuration options: [Full On] [Customize]

Case Open Feature

This allows you to enable or disable case open detection feature. The default is value [Disabled].

Clear Status

This option appears only when the case open has been detected. Use this option to keep or clear the record of previous chassis intrusion status.

5.5 Security Screen

In this section you may set or change the supervisor/user password for the system. You may also clear the user password.

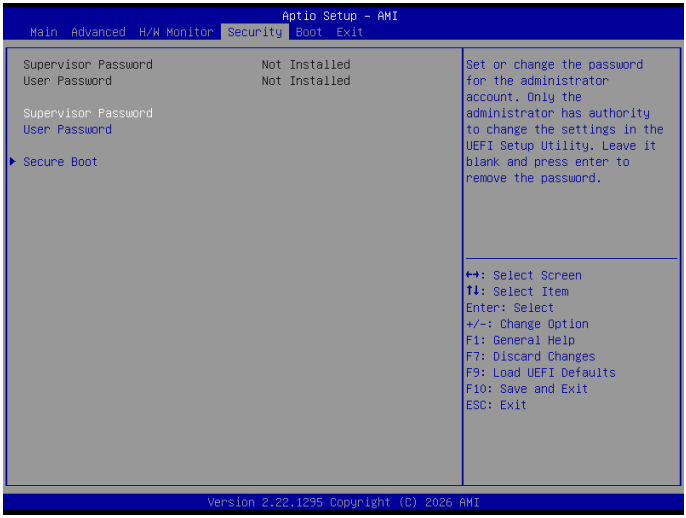

Supervisor Password

Set or change the password for the administrator account. Only the administrator has the authority to change the settings in the UEFI Setup Utility. Leave it blank and press enter to remove the password.

User Password

Set or change the password for the user account. Users are unable to change the settings in the UEFI Setup Utility. Leave it blank and press enter to remove the password.

Secure Boot

Press [Enter] to configure the Secure Boot Settings. The feature protects the system from unauthorized access and malwares during POST.

5.6 Boot Screen

This section displays the available devices on your system for you to configure the boot settings and the boot priority.

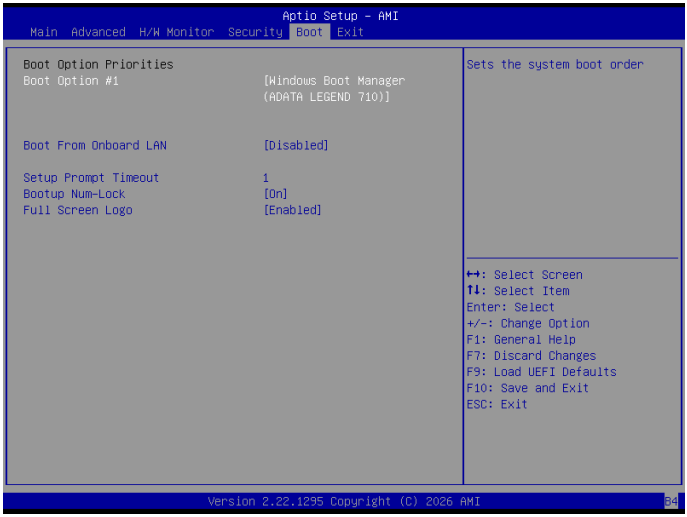

Boot Option #1

The item allows you to set the system boot order.

Boot From Onboard LAN

The item allows the system to be waked up by the onboard LAN.

Configuration options: [Enabled] [Disabled]

Setup Prompt Timeout

The item allows you to configure the number of seconds to wait for the UEFI setup utility.

Configuration options: [1] - [65535]

Bootup Num-Lock

The item allows you to select whether Num Lock should be turned on or off when the system boots up.

Configuration options: [On] [Off]

Full Screen Logo

[Enabled] Select this item to display the boot logo.

[Disabled] Select this item to show normal POST messages.

5.7 Exit Screen

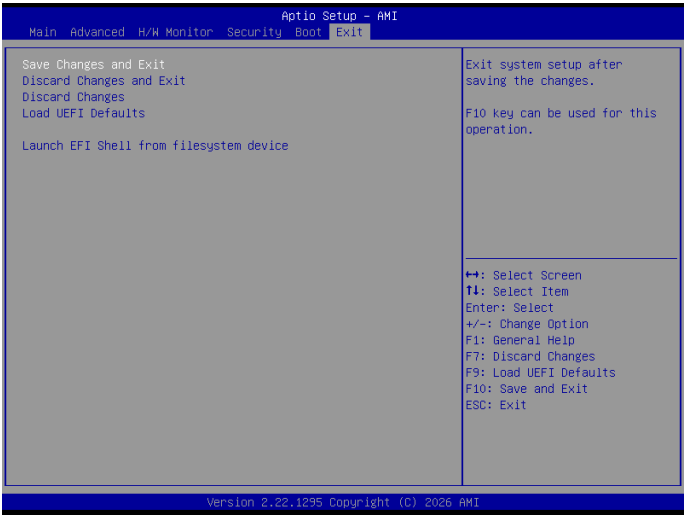

Save Changes and Exit

When you select this option, the following message "Save configuration changes and exit setup?" will pop out. Select [Yes] to save the changes and exit the UEFI SETUP UTILITY.

Discard Changes and Exit

When you select this option, the following message "Discard changes and exit setup?" will pop out. Select [Yes] to exit the UEFI SETUP UTILITY without saving any changes.

Discard Changes

When you select this option, the following message "Discard changes?" will pop out. Select [Yes] to discard all the changes.

Load UEFI Defaults

The item allows you to load UEFI default values for all options. The F9 key can be used for this operation.

Launch EFI Shell from filesystem device

The item allows you to copy shellx64.efi to the root directory to launch EFI Shell.

Chapter 6 Software Support

6.1 Install Operating System

This motherboard supports various Microsoft® Windows® operating system: 11 64-bit. Because motherboard settings and hardware options vary, use the setup procedures in this chapter for general reference only. Refer your OS documentation for more information.