AIE800-904-FL Series

Embedded System

User's Manual

USER'S MANUAL

AXIOMTEK

www.axiomtek.com

Disclaimers

This manual has been carefully checked and believed to contain accurate information. Axiomtek Co., Ltd. assumes no responsibility for any infringements of patents or any third party's rights, and any liability arising from such use.

Axiomtek does not warrant or assume any legal liability or responsibility for the accuracy, completeness or usefulness of any information in this document. Axiomtek does not make any commitment to update the information in this manual.

Axiomtek reserves the right to change or revise this document and/or product at any time without notice.

No part of this document may be reproduced, stored in a retrieval system, or transmitted, in any form or by any means, electronic, mechanical, photocopying, recording, or otherwise, without the prior written permission of Axiomtek Co., Ltd.

Trademarks Acknowledgments

Axiomtek is a trademark of Axiomtek Co., Ltd.

Windows® is a trademark of Microsoft Corporation.

NVIDIA®, the NVIDIA logo, Jetson™, Jetson Xavier™, and Jetson AGX Xavier™ are trademarks of the NVIDIA Corporation.

Other brand names and trademarks are the properties and registered brands of their respective owners.

©Copyright 2022 Axiomtek Co., Ltd.

All Rights Reserved

September 2022, Version A2

Printed in Taiwan

Safety Precautions

Before getting started, please read the following important safety precautions.

1. The AIE800-904-FL does not come with an operating system which must be loaded first before installation of any software into the computer.
2. Be sure to ground yourself to prevent static charge when installing any internal components. Use a wrist grounding strap and place all electronic components in any static-shielded devices. Most electronic components are sensitive to static electrical charge.
3. Disconnect the power cord from the AIE800-904-FL prior to making any installation. Be sure both the system and all external devices are turned OFF. Sudden surge of power could ruin sensitive components. Make sure the AIE800-904-FL is properly grounded.
4. Make sure the voltage of the power source is correct before connecting it to any power outlet.
5. Turn off system power before cleaning. Clean the system using a cloth only. Do not spray any liquid cleaner directly onto the screen.
6. Do not leave equipment in an uncontrolled environment where the storage temperature is below -40℃ or above 80℃ as it may damage the equipment.
7. Do not open the system's back cover. If opening the cover for maintenance is a must, only a trained technician is allowed to do so. Integrated circuits on computer boards are sensitive to static electricity. To avoid damaging chips from electrostatic discharge, observe the following precautions:
   - Before handling a board or integrated circuit, touch an unpainted portion of the system unit chassis for a few seconds. This will help discharge any static electricity on human body.
   - When handling boards and components, wear a wrist grounding strap available from most electronic component stores.

Classifications

1. Degree of production against electric shock: not classified
2. Degree of protection against ingress of water: IP67
3. Equipment not suitable for use in the presence of a flammable anesthetic mixture with air, oxygen or nitrous oxide.
4. Mode of operation: Continuous

Note: **All I/O connectors should be connected with corresponding cables when the system Is operating with IP67 rated definition. If some of the I/O ports are not to be used or Connected during operation, users must use I/O covers to plug the ports in order to meet the IP67 standard.**

General Cleaning Tips

Please keep the following precautions in mind while understanding the details fully before and during any cleaning of the computer and any components within.

A piece of dry cloth is ideal to clean the device.

1. Be cautious of any tiny removable components when using a vacuum cleaner to absorb dirt on the floor.
2. Turn the system off before cleaning up the computer or any components within.
3. Avoid dropping any components inside the computer or getting the circuit board damp or wet.
4. For cleaning, be cautious of all kinds of cleaning solvents or chemicals which may cause allergy to certain individuals.
5. Keep foods, drinks or cigarettes away from the computer.

Cleaning Tools:

Although many companies have created products to help improve the process of cleaning computer and peripherals, users can also use household items accordingly for cleaning. Listed below are items available for cleaning computers or computer peripherals.

Pay special attention to components requiring designated products for cleaning as mentioned below.

- Cloth: A piece of cloth is the best tool to use when rubbing up a component. Although paper towels or tissues can be used on most hardware as well, it is recommended to use a piece of cloth.
- Water or rubbing alcohol: A piece of cloth may be somewhat moistened with water or rubbing alcohol before being rubbed on the computer. Unknown solvents may be harmful to plastic parts.
- Vacuuming dust, dirt, hair, cigarette and other particles outside of a computer can be one of the best methods of cleaning a computer. Over time these items may restrict the airflow in a computer and cause circuitry to corrode.
- Cotton swabs: Cotton swabs moistened with rubbing alcohol or water are applicable to reach areas in a keyboard, mouse and other areas.
- Foam swabs: If possible, it is better to use lint free swabs such as foam swabs.

.

Note: **It is strongly recommended that the customer should shut down the system before starting to clean any single components.**

Please follow the steps below:

1. Close all application programs;
2. Close operating software;
3. Turn off power switch;
4. Remove all devices;
5. Pull out the power cable.

Scrap Computer Recycling

Please inform the nearest Axiomtek distributor as soon as possible for suitable solutions in case computers require maintenance or repair; or for recycling in case computers are out of order or no longer in use.

Trademarks Acknowledgments

Axiomtek is a trademark of Axiomtek Co., Ltd.
IBM, PC/AT, PS/2, VGA are trademarks of International Business Machines Corporation.
Intel® and Pentium® are registered trademarks of Intel Corporation.
NVIDIA® and Jetson™, Jetson Xavier™, and Jetson AGX Xavier™ are registered trademarks of NVIDIA Corporation.
MS-DOS, Microsoft C and QuickBasic are trademarks of Microsoft Corporation.
Windows 10, Linux and other brand names and trademarks are the properties and registered brands of their respective owners.

Table of Contents

Disclaimers ii
Safety Precautions iii
Classifications iv
General Cleaning Tips v
Scrap Computer Recycling vi

SECTION 1 INTRODUCTION 1
1.1 General Descriptions 1
1.2 System Specifications 2
1.2.1 Product Specification 2
1.2.2 I/O System 3
1.2.3 System Specification 3
1.3 Dimensions 4
1.3.1 System Dimensions 4
1.3.2 Wall-mount Bracket Dimensions 5
1.3.3 VESA-mount Bracket Dimensions 6
1.4 I/O Outlets 7
1.5 Packing List 8
1.6 Model List 8

SECTION 2 HARDWARE INSTALLATION 9
2.1 M.2 SSD Installation 10
2.2 Installation of LTE Mini PCIe Module 12

SECTION 3 JUMPER & CONNECTOR SETTINGS 15
3.1 Jumper & Connector Location 15
3.2 Jumper Setting Summary 17
3.3 Connectors 18
3.3.1 PoE Power Output Connector (M12 X-Code 8 pos Female) 19
3.3.2 USB 2.0 Connector (C3 Type 4 pos Female) 19
3.3.3 AC Power Jack Connector (M12 S-Code 4 pos Male) 19
3.3.4 HDMI Connector (C3 Type 19 pos Female) 20
3.3.5 Micro USB 2.0 Connector (CN1) 20
3.3.6 Debug Port Connector (CN2) 21
3.3.7 CMOS Battery Interface (BAT1) 21
3.3.8 M.2 2242 Key B NVMe SSD (SCN1) 22
3.3.9 SIM Card Slot (SCN2) 23
3.3.10 PCI-Express Mini Card Connector (SCN3) 24

SECTION 4 JETPACK FLASH METHOD 25
4.1 Jetpack Flash Method 25
4.2 Image Information Inquiry Command 29
4.3 JTOP — Third-party Jetson Platform Monitor Tool 30

This page is intentionally left blank.

SECTION 1
INTRODUCTION

This chapter contains general information and detailed specifications of the AIE800-904-FL. Section 1 consist of the following sub-sections:

- General Description
- System Specifications
- Dimensions
- I/O Outlets
- Packing List
- Model List

1.1 General Descriptions

The AIE800-904-FL comes with the NVIDIA® Jetson Xavier™ NX System-on-module (SoM) and supports Linux Ubuntu 18.04. In order to achieve optimal durability and heat dissipation, this ruggedized box PC adopts a fanless and streamlined enclosure made from IP67-rated aluminum die-casting and heavy-duty steel.

The AIE800-904-FL is designed to operate under a wide temperature range from -30°C to 50°C. It also supports wide-range AC power input from 100 to 240 VAC and features M12 lockable connectors, making the box PC particularly suited for operation in mission-critical applications and harsh outdoor environments.

- **Features**

  1. IP67-rated design, specifically for outdoor environments
  2. NVIDIA® Jetson Xavier™ NX with Volta™ GPU architecture with 384 NVIDIA CUDA® cores
  3. High AI computing performance for GPU accelerated processing
  4. -30˚C to +50˚C wide operating temperature range

5. 100 ~ 240 VAC wide range power input with 10kV surge protection
6. 1 IEEE 802.3at GbE PoE (30W)
7. Flexible I/O for customized and mission-critical projects

- **Reliable and Stable Design**
  Powered by the NVIDIA® Jetson Xavier™ NX SoM, the AIE800-904-FL is equipped with M12 lockable connectors while supporting a wall mount / VESA mount kit for outdoor applications.

- **JetPack Supported**

  The AIE800-904-FL supports JetPack 4.4 or later. NVIDIA JetPack SDK is the most comprehensive solution for building AI applications. All Jetson modules are supported by JetPack SDK.

  JetPack SDK includes the Linux Driver Package (L4T) with Linux operating system and CUDA-X accelerated libraries and APIs for Deep Learning, Computer Vision, Accelerated Computing and Multimedia. It also includes samples, documentation, and developer tools for both host computer and AIE series, and supports higher level SDKs such as DeepStream for streaming video analytics and Isaac for robotics.

- **O.S. Supported**
  The AIE800-904-FL supports Linux Ubuntu 18.04 or later.

- **Various Storage devices supported**
  For optimized storage capacity, the AIE800-904-FL supports one M.2 Key B 2242 with PCI-Express 2.0 x2 Interface (supports NVMe SSD), and an onboard 16GB eMMC (via Jetson Xavier™ NX).

1.2 System Specifications

1.2.1 Product Specification

- **CPU Board**
  - NVIDIA® Jetson Xavier™ NX
- **CPU**
  - 6-core NVIDIA Carmel ARM® v8.2 64-bit CPU 6 MB L2 + 4 MB L3
- **GPU**
  - 384-core NVIDIA Volta™ GPU with 48 Tensor Cores
- **Storage**
  - 16GB eMMC onboard
  - One M.2 Key B 2242 with PCI-Express 2.0 x2 NVMe SSD slot
- **System Memory**
  - One 8GB 128-bit LPDDR4x onboard
- **WLAN & WWAN**
  - Supports Wi-Fi/Bluetooth/LTE/GPS through an optional Mini PCI-Express module

1.2.2 I/O System

- **One C3 type HDMI for display (HDMI Full HD Resolution: up to 1920 x 1080)**
- **One M12 X-Code IEEE 802.3at Gigabit PoE (30W, Intel® I210-IT)**
- **One C3 type USB 2.0 connector**
- **One full-size PCI Express Mini Card slot (USB + PCI Express signal)**
- **One SIM slot**
- **Four N Jack type antenna openings with waterproof design**

  ※ **The AIE800-904-FL supports either LTE or Wi-Fi only. To facilitate maintenance, the AIE800-904-FL supports 4 antenna openings and comes with two pre-installed LTE and two pre-installed Wi-Fi RF cables before shipment.**
- **One M12 S-Code 4-pos AC in power input**

1.2.3 System Specification

- **Watchdog Timer**
  - Supports the watchdog timer embedded in NVIDIA® Jetson Xavier™ NX
- **Power Supply**
  - Input: 100 ~ 240 VAC
- **Operation Temperature**
  - -30℃ ~ 50℃ (-22 ºF ~ 122ºF)
- **Storage Temperature**
  - -40℃ ~ 80℃ (-40 ºF ~ 176ºF)
- **Humidity**
  - 10% ~ 95% (non-condensation)
- **Vibration Endurance**
  - 3Grm with eMMC (5-500Hz, X, Y, Z directions)
- **Weight**
  - 4.13 kg (9.11 lb) without package
  - 5.5 kg (12.13 lb) with package
- **Dimensions**
  - 366.8 mm (14.44") (W) x 235 mm (9.25") (D) x 83.8 mm (3.3") (H)

Note: **All specifications and images are subject to change without notice.**

1.3 Dimensions

The following diagrams show the dimensions and outlines of the AIE800-904-FL.

1.3.1 System Dimensions

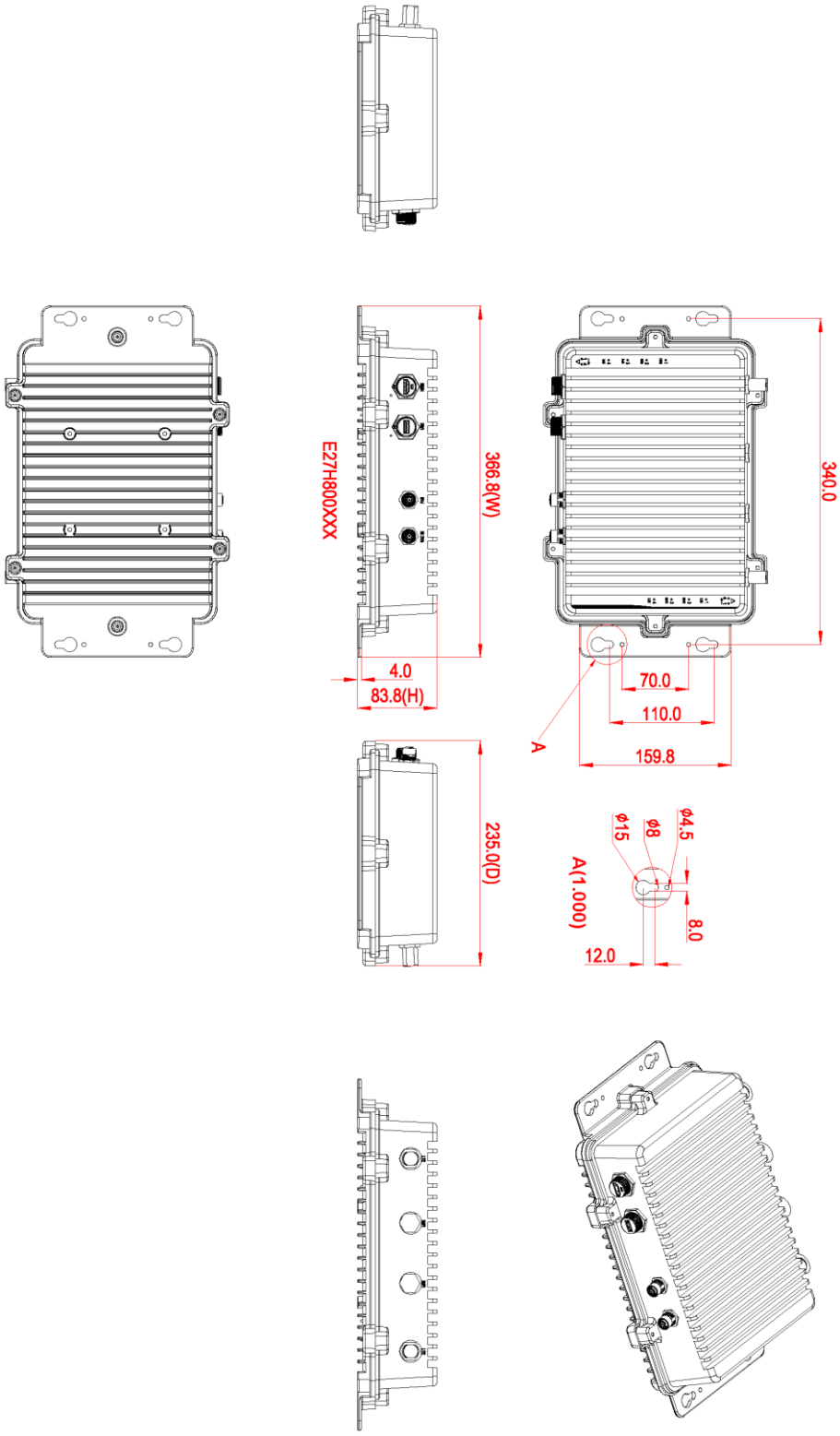

1.3.2 Wall-mount Bracket Dimensions

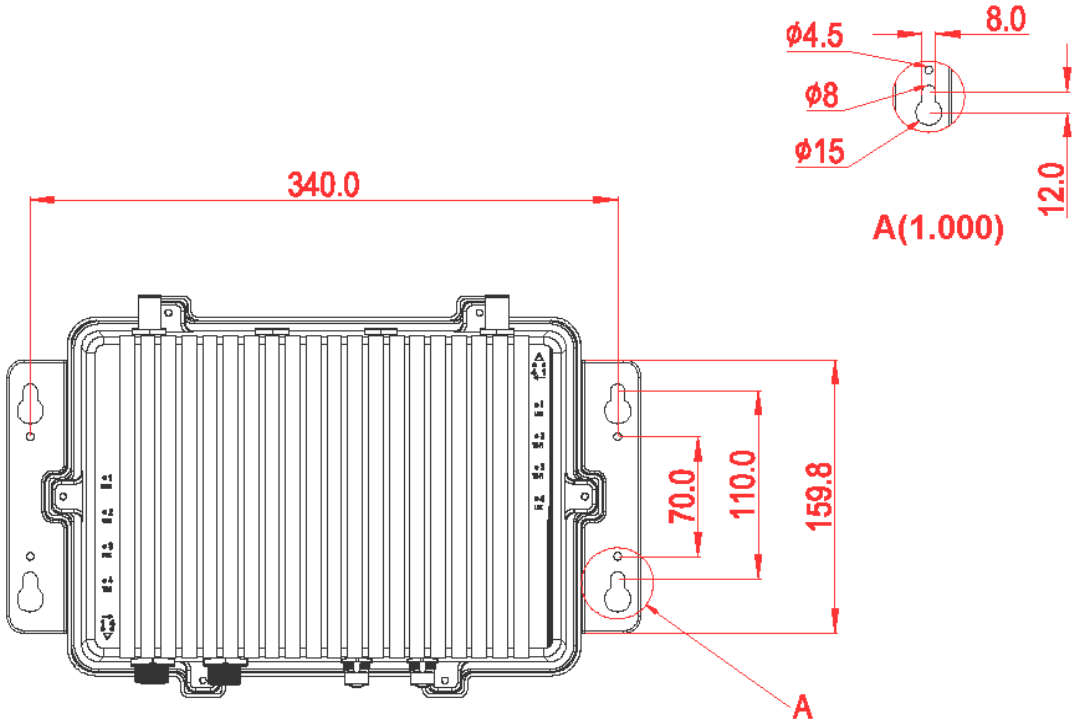

1.3.3 VESA-mount Bracket Dimensions

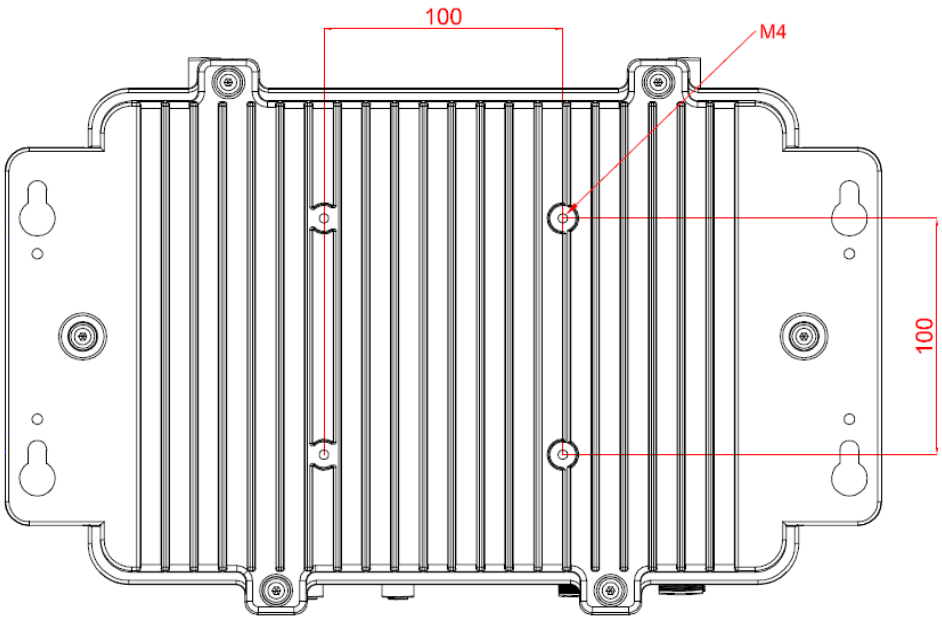

1.4 I/O Outlets

The following figures show I/O outlets on the front of the AIE800-904-FL.

Top View

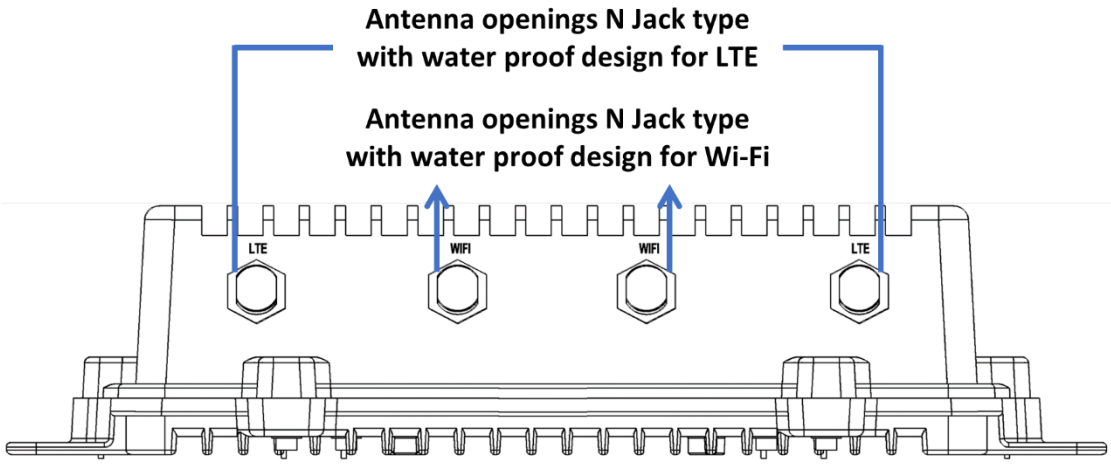

Bottom View

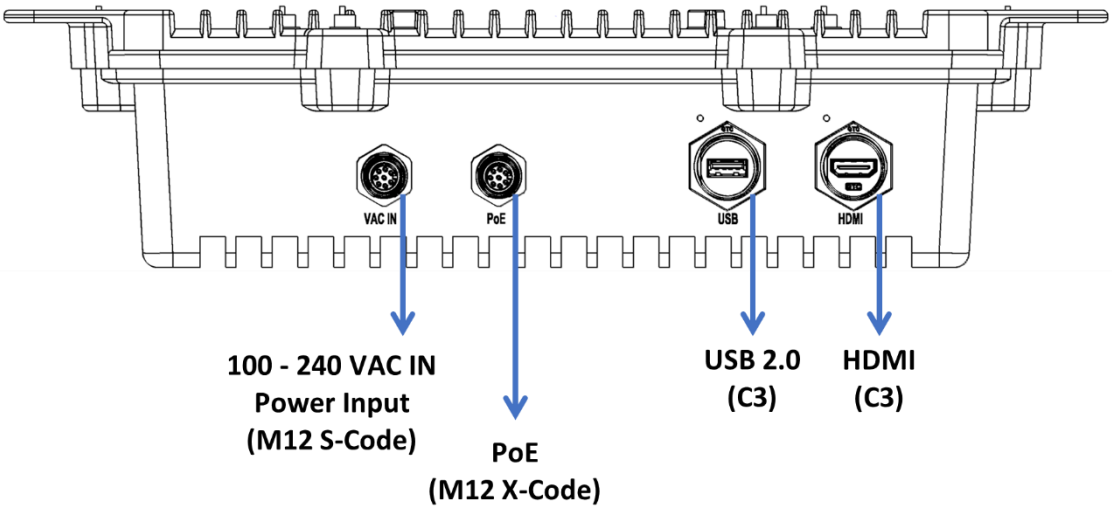

1.5 Packing List

The package bundled with your AIE800-904-FL should contain the following items:

- **AIE800-904-FL system unit x 1**
- **Screws pack x 1**
- **Thermal pad kit x 1**

※Regarding the latest product manual, please download them from Axiomtek official website.

1.6 Model List

AIE800-904-FL	Rugged IP67-rated Fanless Edge AI System with NVIDIA® Jetson Xavier™ NX, 1 HDMI, 1 GbE PoE, 1 USB and 100 to 240 VAC Power Input

Please contact Axiomtek's distributors immediately in case any abovementioned items are missing.

SECTION 2
HARDWARE INSTALLATION

The AIE800-904-FL is convenient for various hardware configurations, such as SSD (Solid State Drive) and PCI Express Mini card modules. Section 2 contains guidelines for hardware installation.

※CAUTION:

Run Waterproof capability may be affected if the system is improperly disassembled. Under such circumstances Axiomtek shall not be held liable for any quality deterioration.

Please refer to the tightening torque information below for all system screws:

⦿ **HEX socket set screw: 7.5 kgf**

HEX KEY specifications are shown below:

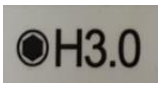

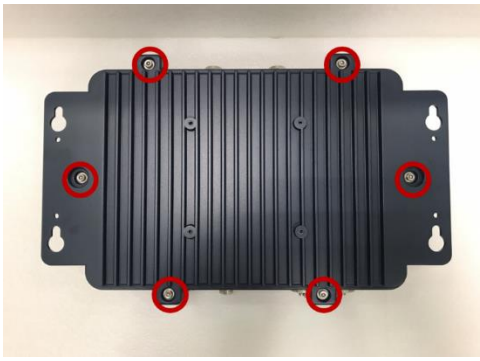

⦿ **N jack connector:**

- **VAC IN, PoE, Wi-Fi & LTE: 10 kgf**
- **USB & HDMI: 19 kgf**

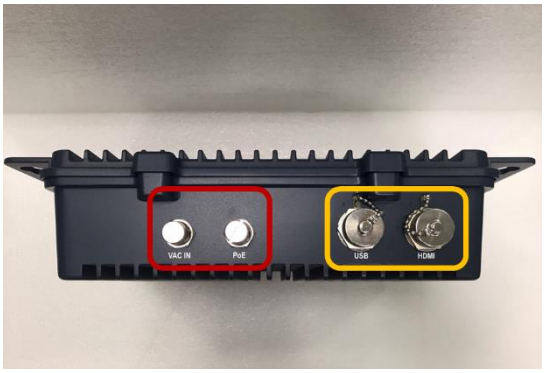

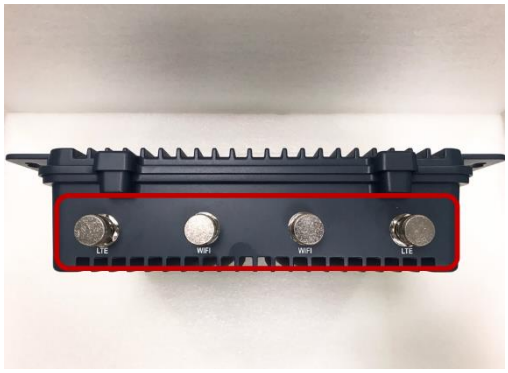

2.1 M.2 SSD Installation

Step 1 **Turn off the system and unplug the power cord.**

Step 2 **Turn the system upside down to locate and loosen the six screws at the bottom, as marked by the red circles in the figure below. Then remove the bottom cover.**

Step 3 **After removing the bottom cover, locate the M.2 2242 Key B slot on the board, then take two thermal pads out of the package box, and apply one thermal pad on the M.2 2242 Key B slot.**

Step 4 **While holding the M.2 2242 Key B SSD card at a 30-degree angle up from the horizontal, slowly insert the golden finger into the M.2 2242 Key B slot until it is fully inserted in place. And secure the M.2 2242 Key B SSD card to the carrier by tightening up one M3*3L screw to the marked position. Then apply another thermal pad on the M.2 2242 Key B SSD card.**

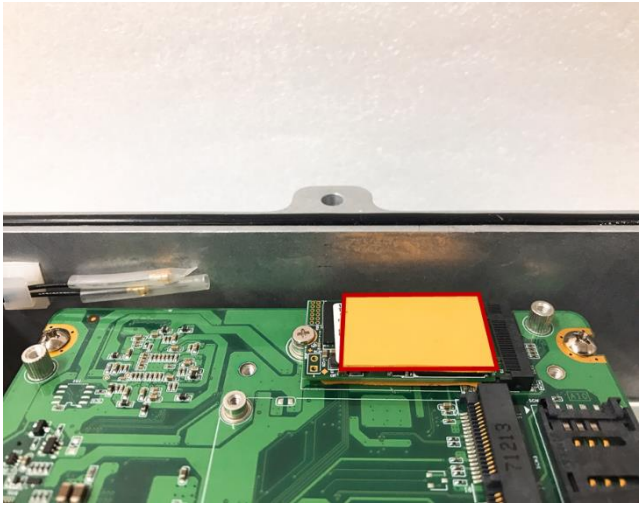

2.2 Installation of LTE Mini PCIe Module

Step 1 **Turn off the system and unplug the power cord.**

Step 2 **Turn the system upside down to locate and loosen the six screws at the bottom, as marked by the red circles in the figure below. Then remove the bottom cover.**

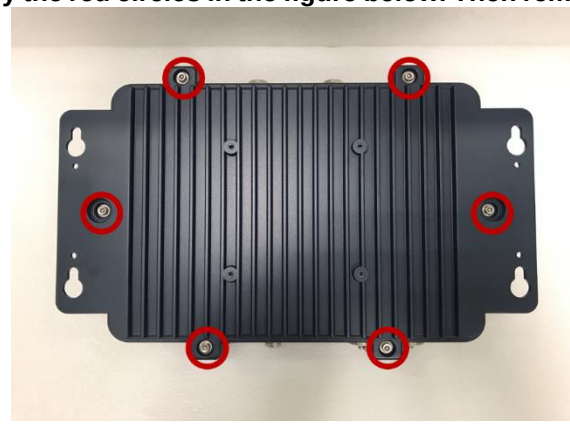

Step 3 **After removing the bottom cover, locate the PCI Express mini card slot on the board.**

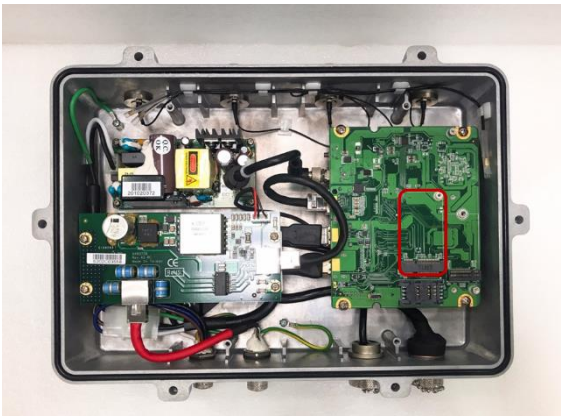

Step 4 **While holding the PCI Express mini card at a 45-degree angle up from the horizontal, slowly insert the golden finger into the PCI Express slot until it is fully inserted in place.**

Step 5 **Press the PCI Express mini card down gently, but firmly, and then secure the card to the carrier by tightening up the one M2*3L screw to the marked position.**

Step 6 **Find the SMA cables from the adhesive backed cord clip attached to the chassis, as shown in the picture below.**

Note: **The LTE and Wi-Fi modules come with different types of SMA cables: one is IPEX, and the other is IPEX4. Do not mix them up to avoid mismatch.**

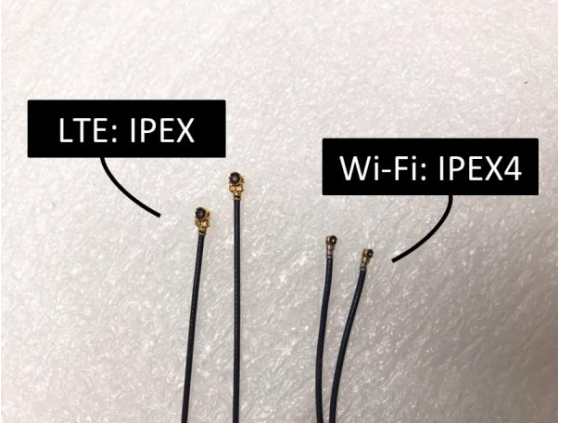

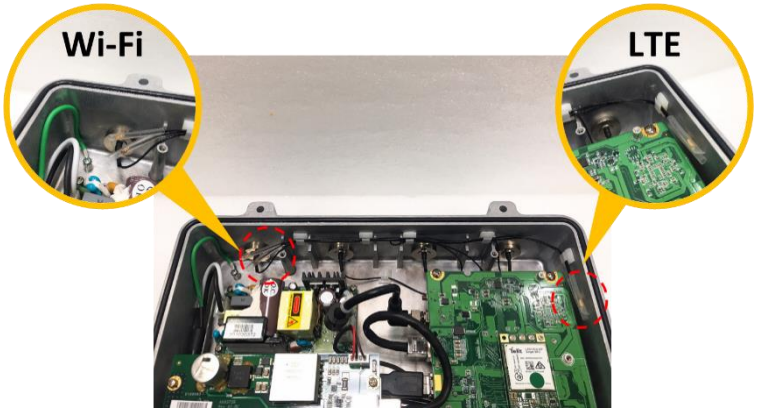

Step 7 Connect the SMA cables to the I-PEX connector of the LTE Module and install LTE antennas.

SECTION 3
JUMPER & CONNECTOR SETTINGS

Proper jumper settings configure the **AIE800-904-FL** to meet your application purpose. This section explains all jumpers and connectors as well as their default settings for onboard devices, respectively.

3.1 Jumper & Connector Location

Carrier Board Top View

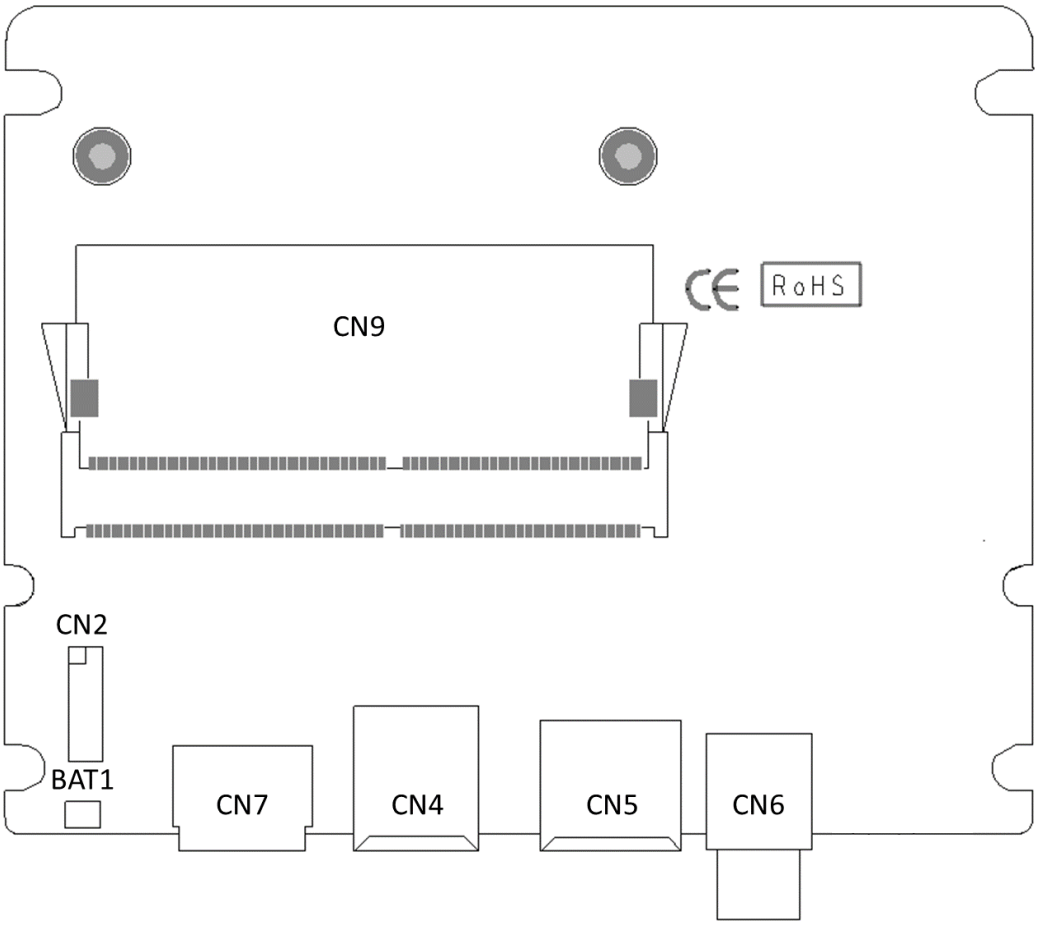

Carrier Board Bottom View

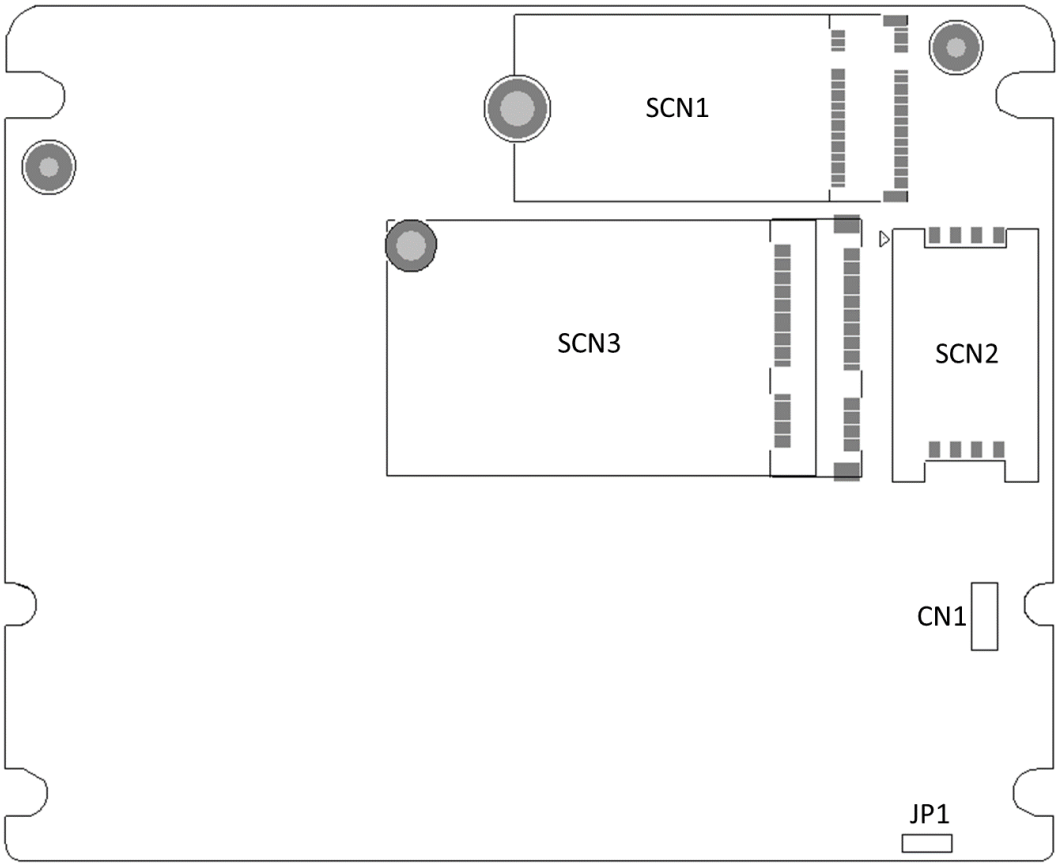

Note: **We strongly recommended that you should not modify any unmentioned jumper setting without Axiomtek FAE's instruction. Any modification without instruction might cause damage to the system.**

3.2 Jumper Setting Summary

Proper jumper settings configure the AIE800-904-FL to meet your application purpose. We are herewith listing a summary table of all jumpers and default settings for onboard devices, respectively.

Carrier Board:

Jumper & Switch	Descriptions		Settings
JP1	Force Recovery Mode	Force Recovery Mode	1-2 Close
		Normal Mode	2-3 Close

Note: How to set up Jumpers

The illustration shows how to set up jumpers. When the jumper cap is placed on pins, the jumper is "closed"; if not, that means the jumper is "open".

[Open]

[Closed]

[Pin1-2 Closed]

3.3 Connectors

The AIE800-904-FL has one PoE, one USB, one HDMI and one 100~240 VAC connector. Please refer to pin assignments below:

External Connectors	Sections
PoE Power Output Connector (M12 X-Code 8 pos Female)	3.3.1
USB 2.0 Connector (C3 Type 4 pos Female)	3.3.2
AC Power Jack Connector (M12 S-Code 4 pos Male)	3.3.3
HDMI Connector (C3 Type 19 pos Female)	3.3.4
Internal Connectors	**Sections**
Micro USB 2.0 Connector (CN1) (For Jetpack flash only)	3.3.5
Debug Port Connector (CN2)	3.3.6
CMOS Battery Interface (BAT1)	3.3.7
M.2 2242 Key B NVMe SSD (SCN1)	3.3.8
SIM Card Slot (SCN2)	3.3.9
PCI-Express Mini Card Connector (SCN3)	3.3.10

3.3.1 PoE Power Output Connector (M12 X-Code 8 pos Female)

This is a power connector for the internal PoE board. It complies with IEEE 802.3at standard via an internal cable connected to the LAN port on an SBC to power an external PoE device.

Pin	Signal	Pin	Signal
L1	MDI0P	L5	MDI2P
L2	MDI0N	L6	MDI2N
L3	MDI1P	L7	MDI3P
L4	MDI1N	L8	MDI3N

3.3.2 USB 2.0 Connector (C3 Type 4 pos Female)

The USB (Universal Serial Bus) connectors are compliant with USB 2.0 (480Mbps), ideal for installing USB peripherals such as the keyboard, mouse, scanner, etc.

Pin	Signal
1	USB_PWR3
2	USB_PN6
3	USB_PP6
4	GND

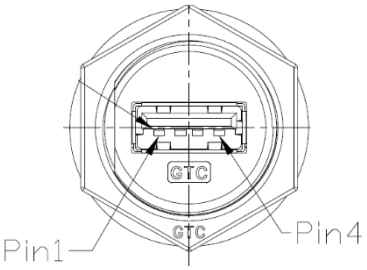

3.3.3 AC Power Jack Connector (M12 S-Code 4 pos Male)

This is an AC power jack connector. Firmly insert the power cable into this connector. To prevent system instability caused by loose connection, make sure all components / devices are properly installed before connecting.

Pin	Signal
1	Line
2	NC
3	Neutral
4	PE/GND

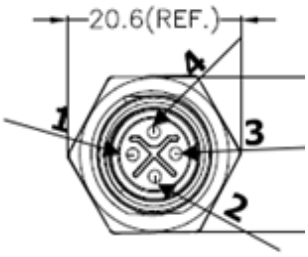

3.3.4 HDMI Connector (C3 Type 19 pos Female)

The HDMI (High-Definition Multimedia Interface) is a compact digital interface which is capable of transmitting high-definition video and high-resolution audio over a single cable.

Pin	Signal	Pin	Signal
1	HDMI DATA2+	2	GND
3	HDMI DATA2-	4	HDMI DATA1+
5	GND	6	HDMI DATA1-
7	HDMI DATA0+	8	GND
9	HDMI DATA0-	10	HDMI Clock+
11	GND	12	HDMI Clock-
13	N.C.	14	N.C.
15	HDMI SCL	16	HDMI SDA
17	GND	18	+5V
19	HDMI_HTPLG		

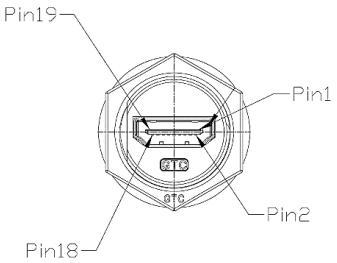

3.3.5 Micro USB 2.0 Connector (CN1)

The CN1 is specifically designed for image flashing only. To flash Jetpack, please set JP1 to "Force Recovery" before booting up the system, which would force the system to recovery mode.

Pin	Signal
1	+5V
2	USB0 DN
3	USB0 DP
4	GND
5	GND

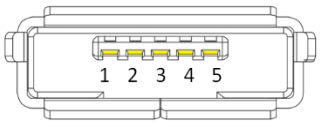

3.3.6 Debug Port Connector (CN2)

The CN2 is UART interface (UART Port0) for the debug port when developing software.

Pin	Signal	Pin	Signal
1	+5V	2	UART2_TXD_3.3V
3	GND	4	UART2_RXD_3.3V
5	GND	6	UART0_TXD_3.3V
7	NC	8	UART0_RXD_3.3V
9	GND	10	PSIN#
11	GND	12	RESET#
13	3.3V	14	M.2_LED#

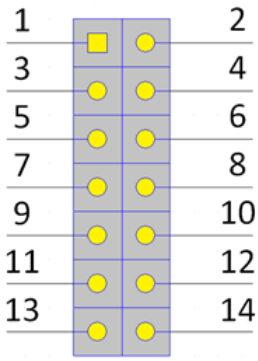

3.3.7 CMOS Battery Interface (BAT1)

This connector is used for CMOS battery interface.

Pin	Signal
1	+3.3V
2	GND

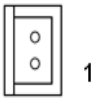

3.3.8 M.2 2242 Key B NVMe SSD (SCN1)

The AIE800-904-FL comes with one M.2 2242 Key B PCIex2 NVM Express SSD for storage use.

Pin	Signal	Pin	Signal	Pin	Signal
1	GND	2	+3.3V	3	GND
4	+3.3V	5	GND	6	NC
7	NC	8	NC	9	NC
10	SSD_LED#	11	GND	12	Connector Key
13	Connector Key	14	Connector Key	15	Connector Key
16	Connector Key	17	Connector Key	18	Connector Key
19	Connector Key	20	NC	21	GND
22	NC	23	NC	24	NC
25	NC	26	NC	27	GND
28	NC	29	PERn1	30	NC
31	PERp1	32	NC	33	GND
34	NC	35	PETn1	36	NC
37	PETp1	38	DEVSLP*	39	GND
40	NC	41	PERn0	42	NC
43	PERp0	44	NC	45	GND
46	NC	47	PETn0	48	NC
49	PETp0	50	PERST#	51	GND
52	CLKREQ#	53	REFCLKN	54	PEWAKE#
55	REFCLKP	56	NC	57	GND
58	NC	59	NC	60	NC
61	NC	62	NC	63	NC
64	NC	65	NC	66	NC
67	NC	68	NC	69	NC
70	+3.3V	71	GND	72	+3.3V
73	GND	74	+3.3V	75	GND

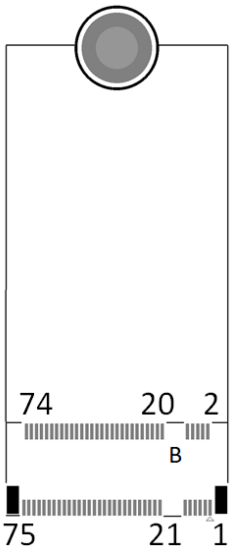

3.3.9 SIM Card Slot (SCN2)

The AIE800-904-FL includes one SIM slot on the bottom side of the system for holding a SIM card. It is mainly used in 3G/LTE wireless network applications on CN3.

Pin	Signal
1	PWR
2	RST
3	CLK
4	NC
5	GND
6	VPP
7	I/O
8	NC

3.3.10 PCI-Express Mini Card Connector (SCN3)

The AIE800-904-FL supports a full-size PCI-Express Mini Card slot. SCN3 is applying to either PCI-Express or USB 2.0 signal, and complies with PCI-Express Mini Card Spec. V1.2.

Pin	Signal	Pin	Signal
1	WAKE#	2	+3.3V
3	No use	4	GND
5	No use	6	+1.5V
7	CLKREQ#	8	No use
9	GND	10	No use
11	REFCLK-	12	No use
13	REFCLK+	14	No use
15	GND	16	No use
17	No use	18	GND
19	No use	20	W_DISABLE#
21	GND	22	PERST#
23	PE_RXN3	24	+3.3V
25	PE_RXP3	26	GND
27	GND	28	+1.5V
29	GND	30	No use
31	PE_TXN3	32	No use
33	PE_TXP3	34	GND
35	GND	36	USB_D8-
37	GND	38	USB_D8+
39	+3.3V	40	GND
41	+3.3V	42	No use
43	GND	44	No use
45	No use	46	No use
47	No use	48	+1.5V
49	No use	50	GND
51	No use	52	+3.3V

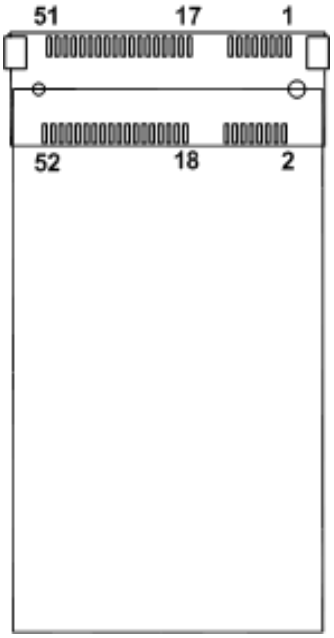

***** W_DISABLE# is controlled by GPIO05 (Pin.128) of NVIDIA® Jetson Xavier™ NX .

SECTION 4
JETPACK FLASH METHOD

This chapter provides users with a detailed description of how to flash NVIDIA Jetpack BSP for AIE800-904-FL, the user could follow the below instruction to install or reinstall Jetpack BSP by themselves.

4.1 Jetpack Flash Method

Please use the following instructions to flash the JetPack to the AIE800-904-FL.

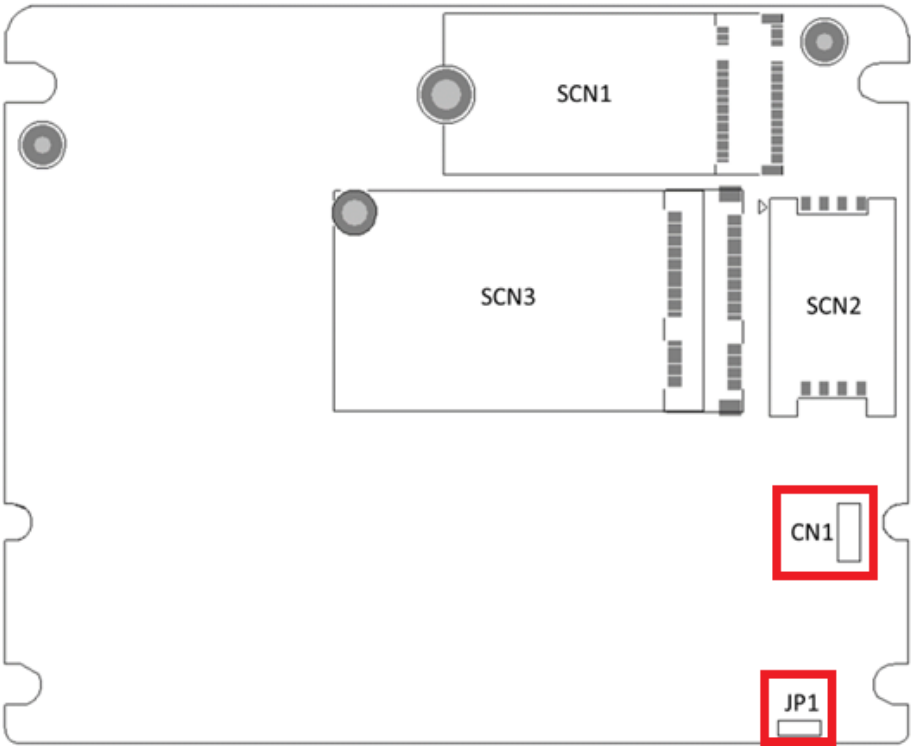

Please contact our sales or FAE for the latest Jetpack SDK, and prepare a Linux host system running x86_64 Ubuntu v16.04

Note: If the Linux host system is running x86_64 Ubuntu v18.04, please follow the instructions below to install Python first.

Step 1. Connect the Linux host system to internet

Step 2. Install Python with the command below:

```
sudo apt-get update
sudo apt-get install python
```

Step1. AIE800-904-FL connection as follows:

- Connect a USB cable from the Linux host system to the Micro USB port (CN1) inside AIE800-904-FL, and set JP1 to "Force Recovery". For more details, please refer to **3.2 Jumper Setting Summary** and **3.3.5 Micro USB 2.0 Connector (CN1)**.
- Connect an HDMI monitor to the AIE800-904-FL.

Step2. Open the terminal at the host system, and change the path to the image file directory,e.g., "~/Downloads", and check image tarball data integrity with the following commands:

```
$ cd ~/Downloads
```

```
$ md5sum -c <image_tarball_file_name>.tbz2.md5sum
```

Command Example:

$ md5sum -c mfi_jetson-xavier-nx-JP4.6.2-SBC87904-V1.0.0.tbz2.md5sum

axio@axio-B460MD3H: ~/Downloads

```
axio@axio-B460MD3H:~/Downloads$ md5sum -c mfi_jetson-xavier-nx-JP4.6.2-SBC87904-V1.0.0.tbz2.md5sum
mfi_jetson-xavier-nx-JP4.6.2-SBC87904-V1.0.0.tbz2: OK
axio@axio-B460MD3H:~/Downloads$
```

Step3. If the check result returns OK, untar the image file with the command below:

```
$ tar jxvf <image_tarball_file_name>.tbz2
```

Command Example:

$ tar jxvf mfi_jetson-xavier-nx-JP4.6.2-SBC87904-V1.0.0.tbz2

axio@axio-B460MD3H: ~/Downloads

```
axio@axio-B460MD3H:~/Downloads$ tar jxvf mfi_jetson-xavier-nx-JP4.6.2-SBC87904-V1.0.0.tbz2
```

Step4. Change the directory to the image package folder with the command below:

```
$ cd <image_file_name>
```

Command Example:

$ cd mfi_jetson-xavier-nx-JP4.6.2-SBC87904-V1.0.0

axio@axio-B460MD3H: ~/Downloads/mfi_jetson-xavier-nx-JP4.6.2-SBC87904-V1.0.0

```
axio@axio-B460MD3H:~/Downloads$ cd mfi_jetson-xavier-nx-JP4.6.2-SBC87904-V1.0.0/
axio@axio-B460MD3H:~/Downloads/mfi_jetson-xavier-nx-JP4.6.2-SBC87904-V1.0.0$
```

Step5. Make sure the recovery switch(SSW2) has been switched to ON, and run the command lsusb, then the command line "0955:7e19 Nvidia Corp." should be listed.

```
$ lsusb
```

axio@axio-B460MD3H: ~/Downloads/mfi_jetson-xavier-nx-JP4.6.2-SBC87904-V1.0.0

```
axio@axio-B460MD3H:~/Downloads/mfi_jetson-xavier-nx-JP4.6.2-SBC87904-V1.0.0$ lsusb
Bus 002 Device 001: ID 1d6b:0003 Linux Foundation 3.0 root hub
Bus 001 Device 073: ID 1c4f:0002 SiGma Micro Keyboard TRACER Gamma Ivory
Bus 001 Device 076: ID 0955:7e19 NVidia Corp.
Bus 001 Device 005: ID 05e3:0608 Genesys Logic, Inc. Hub
Bus 001 Device 004: ID 1c4f:0034 SiGma Micro
Bus 001 Device 001: ID 1d6b:0002 Linux Foundation 2.0 root hub
axio@axio-B460MD3H:~/Downloads/mfi_jetson-xavier-nx-JP4.6.2-SBC87904-V1.0.0$
```

Step6. Running the following command to flash the image.

```
$ sudo ./nvmflash.sh
```

axio@axio-B460MD3H: ~/Downloads/mfi_jetson-xavier-nx-JP4.6.2-SBC87904-V1.0.0

```
axio@axio-B460MD3H:~/Downloads/mfi_jetson-xavier-nx-JP4.6.2-SBC87904-V1.0.0$ sudo ./nvmflash.sh
Start flashing device: 1-7, PID: 25902
Ongoing processes: 25902
Ongoing processes: 25902
Ongoing processes: 25902
Ongoing processes: 25902
Ongoing processes: 25902
Ongoing processes: 25902
Ongoing processes: 25902
Ongoing processes: 25902
Ongoing processes: 25902
Ongoing processes: 25902
Ongoing processes: 25902
Ongoing processes: 25902
Ongoing processes: 25902
```

Step7. The flashing procedure takes approximately 20 minutes or more. Once finished, you should see "Flash complete (SUCCESS)" as shown below, and AIE800-904-FL will automatically reboot, and please set JP1 to "Normal Mode" to return to standard mode.

```
Ongoing processes: 25902
Ongoing processes: 25902
Ongoing processes: 25902
Ongoing processes: 25902
Ongoing processes: 25902
Ongoing processes: 25902
Ongoing processes: 25902
Ongoing processes:
Flash complete (SUCCESS)
axio@axio-B460MD3H:~/Downloads/mfi_jetson-xavier-nx-JP4.6.2-SBC87904-V1.0.0$
```

THE DEFAULT LOGIN CREDENTIALS:

Username: nvidia Password: nvidia

※CAUTION:

Running `$ sudo apt upgrade` command for NVIDIA JetPack OTA may overwrite the BSP of the AIE series platform, which can cause unexpected results including losing I/O ports. For regular JetPack updates or reflashing, please contact our sales or FAE to get the latest AIE Series JetPack image.

4.2 Image Information Inquiry Command

Running `axiomtek.sh` command to inquiry the current image information, image version, L4T version, Linux kernel version, and Ubuntu version.

```
nvidia@nvidia-desktop: ~
nvidia@nvidia-desktop:~$ axiomtek.sh
BUILD_MODEL=SBC87904 + Jetson-NX
BUILD_VERSION=JetPack-4.6.2_Linux
BSP_BUILD_VERSION=V1.0.0
BSP_BUILD_COMMIT_ID=master_80a171572
BUILD_DATE=2022/07/27 17:52:23
BUILD_ID=axio
L4T_VERSION=R32-7.2
LINUX_KERNEL_VERSION=4.9.253
UBUNTU_VERSION=Ubuntu 18.04.6 LTS
nvidia@nvidia-desktop:~$
```

4.3 JTOP — Third-party Jetson Platform Monitor Tool

JTOP is a third-party system monitoring utility that runs on the terminal and see and control realtime the status of the AIE Series Platform. CPU, RAM, GPU status, power mode management, toolkits version and more.

Installation Guide:

Please connect to the internet and enter the following commands in the terminal to install JTOP.

```
$ sudo apt install python-pip python3-pip
```

```
$ sudo -H pip install -U jetson-stats
```

Once installation is completed, reboot the device and then type the below command in the terminal to launch JTOP:

```
$ sudo jtop
```
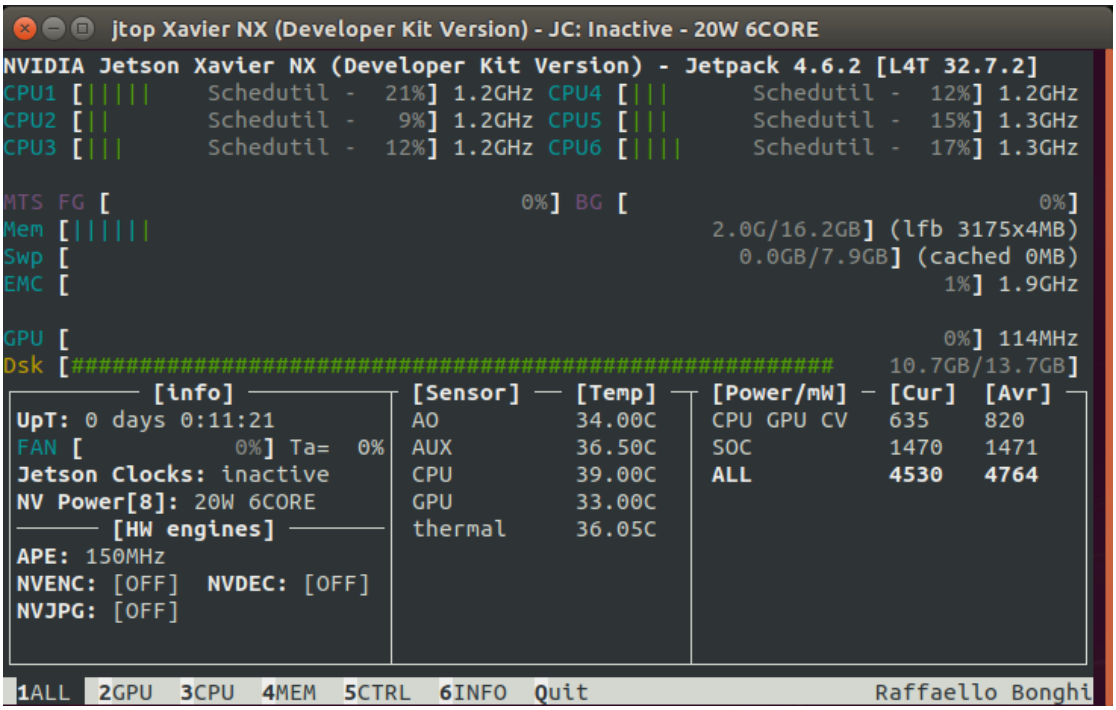
Note: JTOP may require approximately 200 to 300 MB of storage space.