Intel Atom® Processor E3900 Series Mini-ITX

IoT Solutions Alliance

Atom

AL170

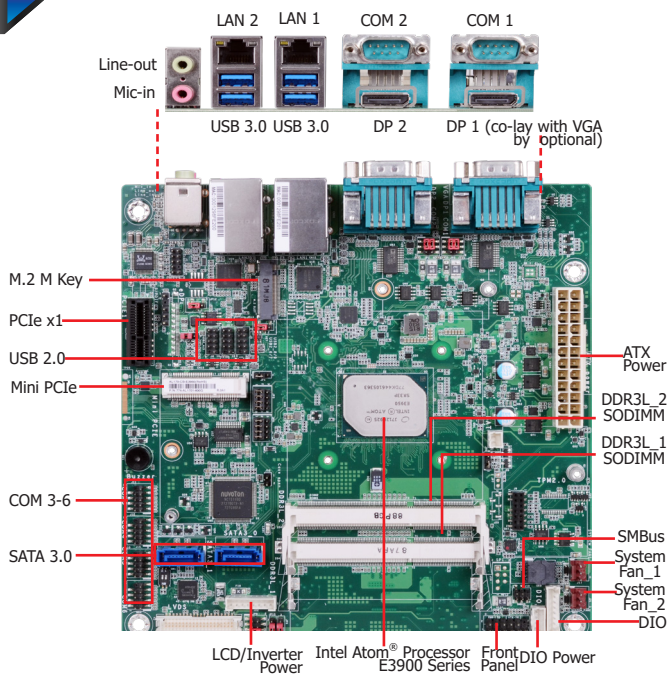

Features

- 2 DDR3L 1867MHz SODIMM up to 8GB
- Three independent displays: (VGA/DP++) + (DP++) + (LVDS/eDP)
- DP++ resolution supports up to 4096x2160 @ 60Hz
- Multiple expansion: 1 M.2 M Key, 1 PCIe x1 (Gen 2), 1 Full-Sized Mini PCIe
- LPC EXT-RS232/485 module extends additional 4 COM ports
- Rich I/O: 2 Intel GbE, 6 COM, 4 USB 3.0, 6 USB 2.0

2 Extension Modules for Additional 4 COM Ports (via the LPC connector)

DFI's Proprietary Technology

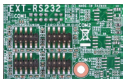

EXT-RS232
- 4 RS232

EXT-RS485
- 4 RS485

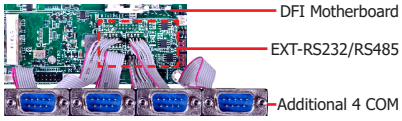

Ordering Information

Model Name	P/N	Processor	Memory	VGA/ DP++	DP++/ DP++	LVDS/ eDP	RS-232/422/485	RS-232	USB 3.0	USB 2.0	Power	Thermal	Temp.
AL170-CT-E3950	770-AL1703-000G	E3950	2 SODIMM	VGA	DP++	LVDS	2	4	4	6	ATX	Fanless	-40 to 85°C
AL170-CT-E3940	770-AL1703-100G	E3940	2 SODIMM	VGA	DP++	LVDS	2	4	4	6	ATX	Fanless	-40 to 85°C
AL170-CT-E3930	770-AL1703-200G	E3930	2 SODIMM	VGA	DP++	LVDS	2	4	4	6	ATX	Fanless	-40 to 85°C
AL170-CB-N4200	770-AL1703-300G	N4200	2 SODIMM	DP++	DP++	eDP	2	4	4	6	ATX	Fanless	0 to 60°C
AL170-CB-N3350	770-AL1703-400G	N3350	2 SODIMM	DP++	DP++	eDP	2	4	4	6	ATX	Fanless	0 to 60°C
AL170-CB-E3940	770-AL1703-500G	E3940	2 SODIMM	DP++	DP++	LVDS	2	4	4	6	ATX	Fanless	0 to 60°C
AL170-CB-E3950	770-AL1703-600G	E3950	2 SODIMM	DP++	DP++	LVDS	2	4	4	6	ATX	Fanless	0 to 60°C

Mechanical Drawing

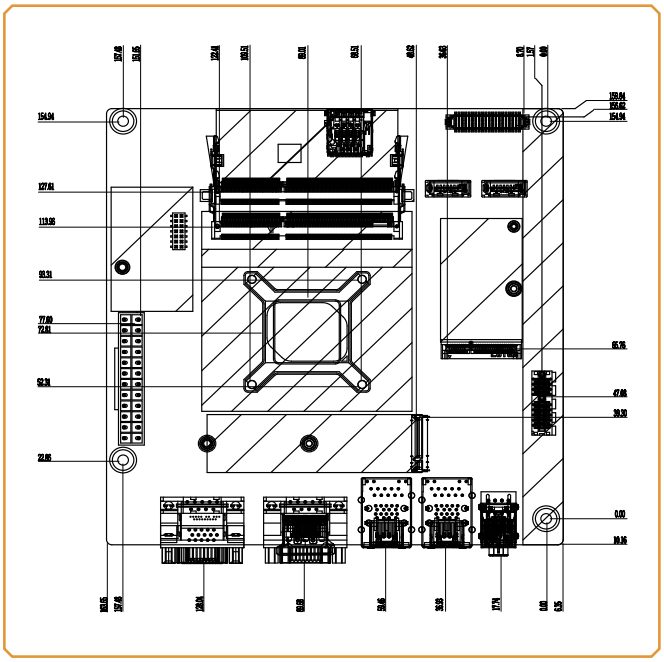

Block Diagram

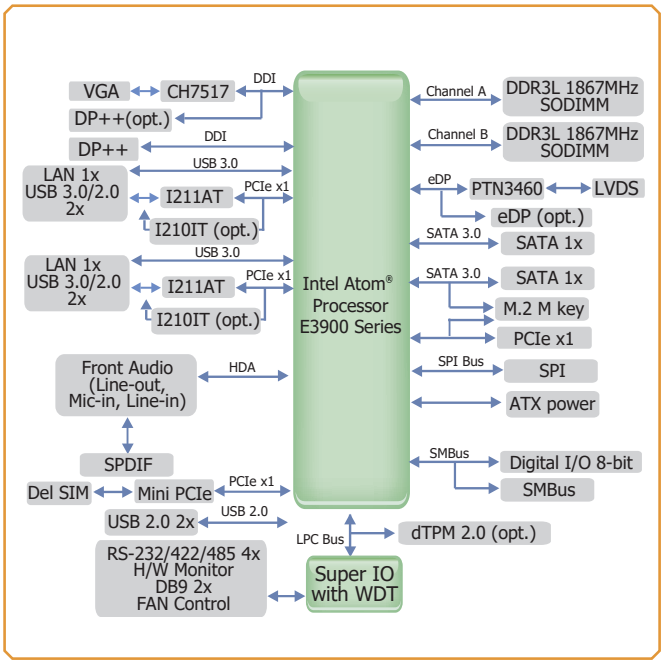

Specifications

SYSTEM	**Processor**	Intel Atom® Processor E3900 Family, BGA 1296 Intel Atom® x7-E3950 Processor, Quad Core, 2M Cache, 1.6GHz (2.0GHz), 12W Intel Atom® x5-E3940 Processor, Quad Core, 2M Cache, 1.6GHz (1.8GHz), 9.5W Intel Atom® x5-E3930 Processor, Dual Core, 2M Cache, 1.3GHz (1.8GHz), 6.5W Intel® Pentium® N4200 Processor, Quad Core, 2M Cache, 1.1GHz (2.5GHz), 6W Intel® Celeron® Processor N3350, Dual core, 2M Cahe 1.1GHz (2.4GHz) , 6W	
	Memory	Two 204-pin SODIMM up to 8GB	Dual Channel DDR3L 1867MHz
	BIOS	SPI 64Mbit (supports UEFI boot only)	
GRAPHICS	**Controller**	Intel® HD Graphics GT Series	
	Feature	OpenGL 5.0, DirectX 12, OpenCL 2.1 HW Decode: AVC/H.264, MPEG2, VC1/WMV9, JPEG/MJPEG, HEVC/H.265, VP8, VP9, MVC HW Encode: AVC/H.264, JPEG/MJPEG, HEVC/H.265, VP8, VP9, MVC	
	Display	1 x VGA/DP++ 1 x DP++ 1 x LVDS/eDP VGA: resolution up to 2560x1600 @ 60Hz LVDS: dual channel 48-bit, resolution up to 1920x1200 @ 60Hz DP++: resolution up to 4096x2160 @ 60Hz eDP: resolution up to 4096x2160 @ 60Hz	
	Triple Displays	VGA + DP++ + LVDS VGA + DP++ + eDP	DP++ + DP++ + LVDS DP++ + DP++ + eDP
EXPANSION	**Interface**	1 x PCIEx (Gen2, signal share w/M.2) 1 x M.2 M key (support 2242/2280, PCIE&SATA signal, default SATA) 1 x Full-size Mini PCIe (PCIe2.0/USB2.0)(USB3.1 Gen 1)(opt.)	
AUDIO	**Audio Codec**	Realtek ALC888	
ETHERNET	**Controller**	-40 to 85°C: 2 x Intel® I210IT PCIe (10/100/1000Mbps) or 0 to 60°C: 2 x Intel® I211AT PCIe (10/100/1000Mbps)	
REAR I/O	**Ethernet**	2 x GbE (RJ-45)	
	USB	4 x USB 3.0	
	Display	1 x VGA/DP++	1 x DP++
	Audio	1 x Line-out 1 x Line-in (available upon request) 1 x Mic-in	
	Serial	2 x RS-232/422/485 (RS-232 w/ power) (DB-9)	
INTERNAL I/O	**Serial**	4 x RS-232 (2.0mm pitch)	
	USB	6 x USB 2.0 (2.0mm pitch)	
	Display	1 x LVDS LCD Panel connector or 1 x eDP LCD panel connector 1 x LCD/intverter Power	
	Audio	1 x S/PDIF	
	SATA	2 x SATA 3.0 (up to 6Gb/s) colay with M.2 M key	
	DIO	1 x 8-bit DIO	
	LPC	1 x LPC (supports LPC EXT-RS232/RS485 module)	
	SMBus	1 x SMBus	
WATCHDOG TIMER	**Output & Interval**	System Reset, Programmable via Software from 1 to 255 Seconds	
SECURITY	**TPM**	dTPM 2.0 (opt.)	
POWER	**Type**	ATX	
	Connector	24-pin ATX power	
	Consumption	TDP 6~12W	
	RTC Battery	CR2032 Coin Cell	
OS SUPPORT (UEFI Only)	**Microsoft/Linux**	Windows 10 64bits (LTSB) Linux	
ENVIRONMENT	**Temperature**	Operating: 0 to 60°C, -40 to 85°C	Storage: -40 to 85°C
	Humidity	Operating: 5 to 90% RH	Storage: 5 to 90% RH
	MTBF	357,197 hrs @ 25°C; 206,214 hrs @ 45°C ; 130,208 hrs @ 60°C Calculation model: Telcordia Issue 2, Method I Case 3 Environment: GB, GC – Ground Benign, Controlled	
MECHANICAL	**Dimensions**	Mini-ITX Form Factor	170mm (6.7") x 170mm (6.7")
	Height	PCB: 1.6mm	Top Side: 38.5mm, Bottom Side: 3.00mm

Packing List

• 1 AL170 motherboard	
• I/O shield	A49-AL1700-010G (VGA/DP++) or A49-AL1700-000G (DP++/DP++)
• Serial ATA data cable (Length: 500mm)	332-553001-005G
• COM port cable (Length: 250mm, 1 x COM ports)	A81-015011-001G
• 1 Heat sink	A71-008106-000G (for E series CPU 0 to 60°C/-40 to 85°C) A71-008101-020G (for N series CPU 0 to 60°C)

Optional Items

• USB 2.0 port cable (Length: 200mm)	A81-001032-016G
• LPC EXT-RS232 module (4 x RS232 ports)	770-EXTRS1-000G
• LPC EXT-RS485 module (4 x RS485 ports)	770-EXTRS1-100G

DFI reserves the right to change the specifications at any time prior to the product's release. Changes thereafter will be based on the product's revision. Please contact your sales representative for the exact revision offered in your area. All product names mentioned are trademarks of their respective companies. © August 19, 2026 DFI Inc.