Intel® Atom™ Processor E3900 Series Mini-ITX

Atom

AL171/AL173

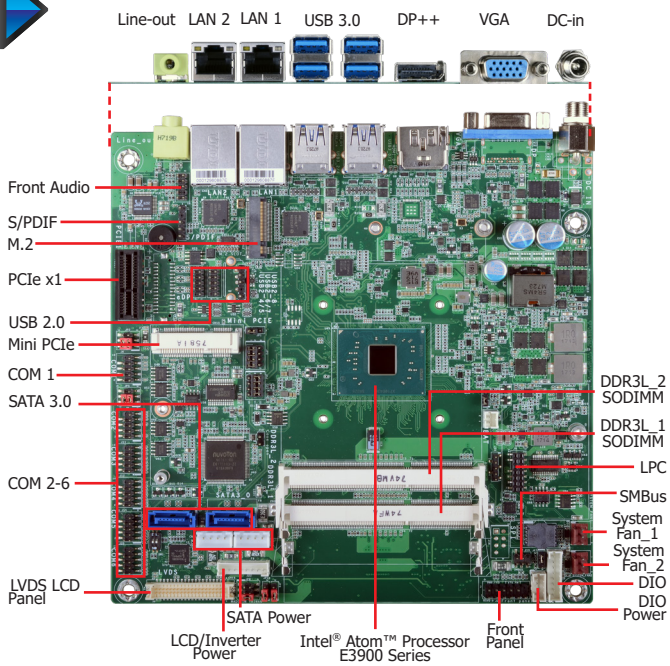

* The photos above refer to AL173.

Features

- 2 DDR3L 1867MHz SODIMM up to 8GB
- Three independent displays: (VGA/DP++) + (DP++) + (LVDS/eDP)
- DP++ resolution supports up to 4096x2160 @ 60Hz
- Multiple expansion: 1 M.2 B key, 1 PCIe x1, 1 Mini PCIe
- LPC EXT-RS232/485 module extends additional 4 COM ports
- Rich I/O: 2 Intel GbE, 6 COM, 4 USB 3.0, 5 USB 2.0

2 Extension Modules for Additional 4 COM Ports (via the LPC connector)

DFI's Proprietary Technology

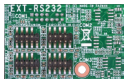

EXT-RS232
- 4 RS232

EXT-RS485
- 4 RS485

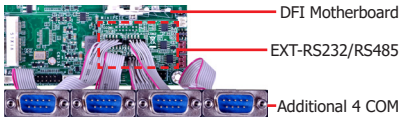

Ordering Information

Model Name	P/N	Processor	Memory	VGA/ DP++	DP++	LVDS/ eDP	RS-232/422/485	RS-232	USB 3.0	USB 2.0	Power	Thermal	Temp.
AL171-CB-N4200	770-AL1714-000G	N4200	2 SODIMM	VGA	1	LVDS	2	4	4	5	12V DC	Fanless	0 to 60°C
AL171-CT-E3930	770-AL1714-100G	E3930	2 SODIMM	VGA	1	LVDS	2	4	4	5	12V DC	Fanless	-40 to 85°C
AL171-CB-E3950	770-AL1714-300G	E3950	2 SODIMM	VGA	1	LVDS	2	4	4	5	12V DC	Fanless	0 to 60°C
AL171-CT-E3950	770-AL1714-800G	E3950	2 SODIMM	VGA	1	LVDS	2	4	4	5	12V DC	Fanless	-40 to 85°C
AL173-CB-N4200	770-AL1734-000G	N4200	2 SODIMM	VGA	1	LVDS	2	4	4	5	15-36V DC	Fanless	0 to 60°C
AL173-CT-E3930	770-AL1734-100G	E3930	2 SODIMM	VGA	1	LVDS	2	4	4	5	15-36V DC	Fanless	-40 to 85°C
AL173-CT-E3950	770-AL1734-800G	E3950	2 SODIMM	VGA	1	LVDS	2	4	4	5	15-36V DC	Fanless	-40 to 85°C

Mechanical Drawing

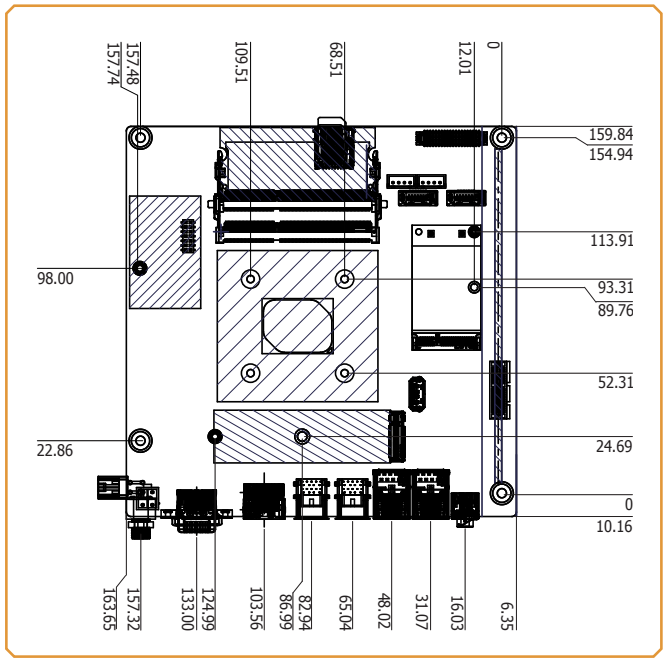

Block Diagram

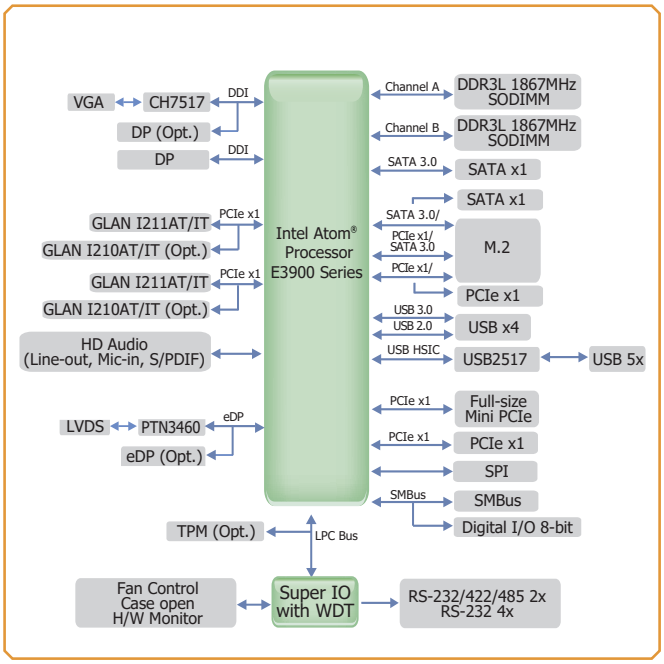

Specifications

SYSTEM	**Processor**	Intel Atom® Processor E3900 Family, BGA 1296 Intel Atom® x7-E3950 Processor, Quad Core, 2M Cache, 1.6GHz (2.0GHz), 12W Intel Atom® x5-E3940 Processor, Quad Core, 2M Cache, 1.6GHz (1.8GHz), 9.5W Intel Atom® x5-E3930 Processor, Dual Core, 2M Cache, 1.3GHz (1.8GHz), 6.5W Intel® Pentium® N4200 Processor, Quad Core, 2M Cache, 1.1GHz (2.5GHz), 6W	
	Memory	Two 204-pin SODIMM up to 8GB	Dual Channel DDR3L 1867MHz
	BIOS	Insyde SPI 128Mbit (supports UEFI boot only)	
GRAPHICS	**Controller**	Intel® HD Graphics GT Series	
	Feature	OpenGL 5.0, DirectX 12, OpenCL 2.1 HW Decode: AVC/H.264, MPEG2, VC1/WMV9, JPEG/MJPEG, HEVC/H.265, VP8, VP9, MVC HW Encode: AVC/H.264, JPEG/MJPEG, HEVC/H.265, VP8, VP9, MVC	
	Display	1 x VGA/DP++ 1 x DP++ 1 x LVDS/eDP	VGA: resolution up to 1920x1200 @ 60Hz LVDS: dual channel 48-bit, resolution up to 1920x1200 @ 60Hz DP++: resolution up to 4096x2160 @ 60Hz eDP: resolution up to 3840x2160 @ 60Hz
	Triple Displays	VGA + DP + LVDS VGA + DP + eDP DP + DP + LVDS DP + DP + eDP	
EXPANSION	**Interface**	1 x PCIe x1 (Gen 2) 1 x M.2 B Key 2242/2280 (PCIE/SATA/USB)	1 x Full-size Mini PCIe (PCIe/USB)
AUDIO	**Audio Codec**	Realtek ALC888S-VD2-GR	
ETHERNET	**Controller**	-40~85°C: 2 x Intel® I211IT/I210IT PCIe (10/100/1000Mbps) or 0-60°C: 2 x Intel® I211AT/I210AT PCIe (10/100/1000Mbps)	
REAR I/O	**Ethernet**	2 x GbE (RJ-45)	
	USB	4 x USB 3.0	
	Display	1 x DP++	1 x VGA/DP++
	Audio	1 x Line-out	
INTERNAL I/O	**Serial**	2 x RS-232/422/485 (RS-232 w/ power) (2.0mm pitch) 4 x RS-232 (2.0mm pitch)	
	USB	4 x USB 2.0 (2.0mm pitch) 1 x USB 2.0 (2.54mm pitch) or 1 x Vertical USB 2.0 (type A) (available upon request)	
	Display	1 x LVDS LCD Panel Connector 1 x LCD/Inverter Power 1 x eDP LCD Panel Connector	
	Audio	1 x S/PDIF 1 x Audio (Line-out/Mic-in)	
	SATA	2 x SATA 3.0 (up to 6Gb/s)	
	DIO	1 x 8-bit DIO	
	LPC	1 x LPC (supports LPC EXT-RS232/RS485 module)	
	SMBus	1 x SMBus	
WATCHDOG TIMER	**Output & Interval**	System Reset, Programmable via Software from 1 to 255 Seconds	
SECURITY	**TPM**	dTPM2.0 (opt.)	
POWER	**Type**	Single 12V +/-10% DC (AL171)	Wide Range 15~36V (AL173)
	Connector	DC-in Jack	Right Angle Connector (4-pin) (available upon request) Vertical Type Connector (4-pin) (available upon request)
	Consumption	Idle: E3950 12W: 12V @ 0.59A (7.08W) Max: E3950 12W: 12V @ 2.23A (26.76W)	
	RTC Battery	CR2032 Coin Cell	
OS SUPPORT (UEFI Only)	**Microsoft/Linux**	Windows 10 IoT Enterprise (64-bit)	Linux
ENVIRONMENT	**Temperature**	Operating: 0 to 60°C, -40 to 85°C	Storage: -40 to 85°C
	Humidity	Operating: 5 to 90% RH	Storage: 5 to 90% RH
	MTBF	AL171: 364,946 hrs @ 25°C; 201,162 hrs @ 45°C ; 122,570 hrs @ 60°C AL173: 358,096 hrs @ 25°C; 197,806 hrs @ 45°C ; 119,639 hrs @ 60°C Calculation model: Telcordia Issue 2 Environment: GB, GC – Ground Benign, Controlled	
MECHANICAL	**Dimensions**	Mini-ITX Form Factor	170mm (6.7") x 170mm (6.7")
	Height	PCB: 1.6mm	Top Side: 16.34mm, Bottom Side: 3.30mm
CERTIFICATION		CE, FCC, RoHS, UL	

Packing List

• 1 AL171/AL173 motherboard	
• 1 COM port cable (Length: 250mm, 1 x COM port)	A81-015011-001G
• 1 Serial ATA data with power cable (Length: 300mm)	A81-002013-000G
• 1 Heatsink	

Optional Items

• USB port cable (Length: 200mm)	A81-001032-016G
• COM port cable (Length: 250mm, 1 x COM port)	A81-015011-001G
• Serial ATA data with power cable (Length: 300mm)	A81-002013-000G
• LPC EXT-RS232 module (4 x RS232 ports)	770-EXTRS1-000G
• LPC EXT-RS485 module (4 x RS485 ports)	770-EXTRS1-100G
• I/O shield (DP++)	A49-AL171D-000G
• I/O shield (VGA)	A49-AL171V-000G

DFI reserves the right to change the specifications at any time prior to the product's release. Changes thereafter will be based on the product's revision. Please contact your sales representative for the exact revision offered in your area. All product names mentioned are trademarks of their respective companies. © August 19, 2026 DFI Inc.