ARS630-W880
ARS630-Q870

Desktop

Intel® Core™ Ultra Processors
ATX

IoT Solutions Alliance

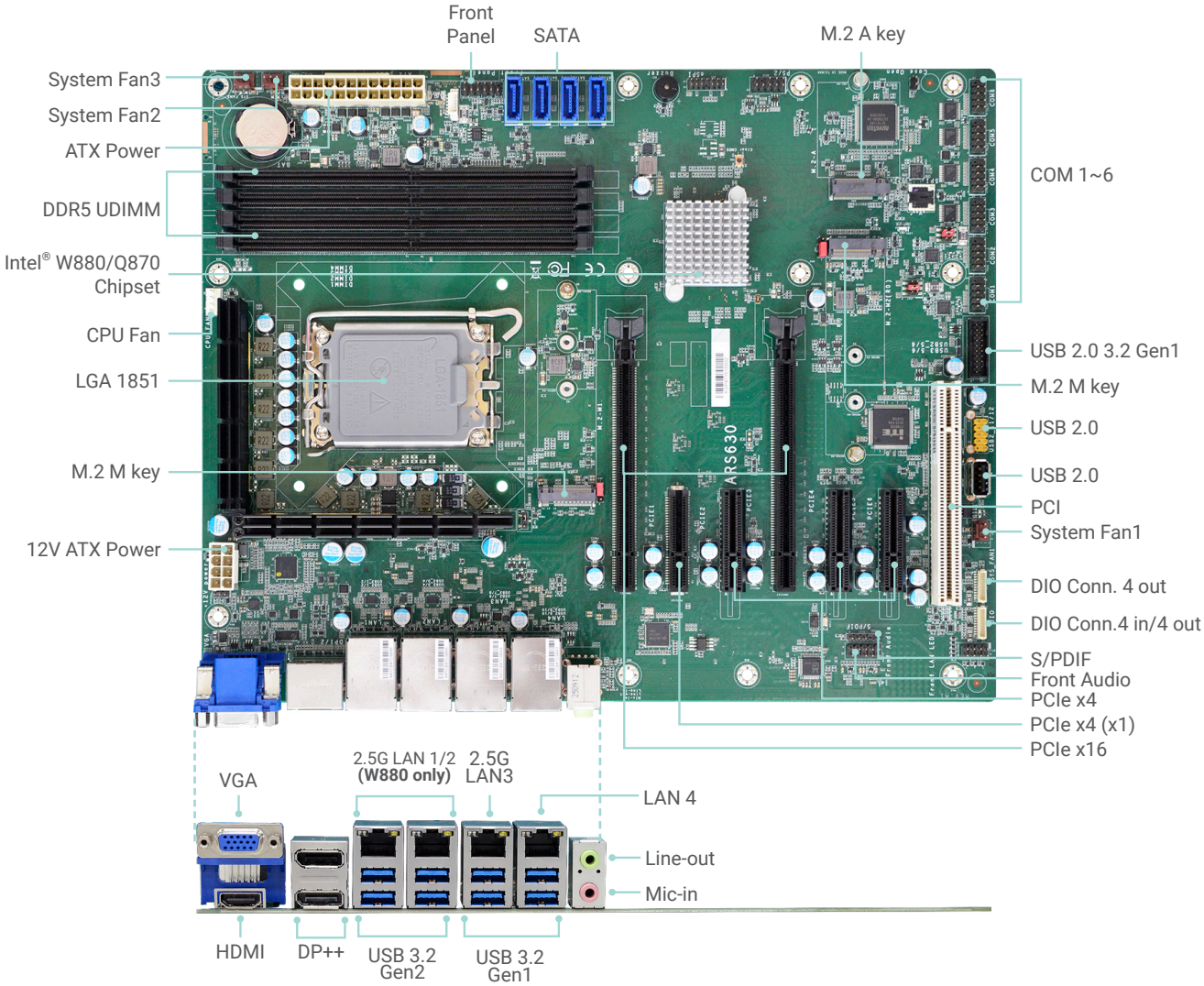

Top View (ARS630-W880)

KEY FEATURES

DDR5
4 DDR5 UDIMM up to 256GB

4K High Resolution
Supports 4K resolution

Quad Displays
VGA, 2 DP++, HDMI

Multiple Expansion
2 PCIe x16, 4 PCIe x4, 1 PCI, 2 M.2 M key, 1 M.2 A Key (for OOB)

Rich I/O
4 Intel 2.5GbE, 6 COM, 4 USB 3.2 Gen2, 6 USB 3.2 Gen1, 3 USB 2.0

BLOCK DIAGRAM

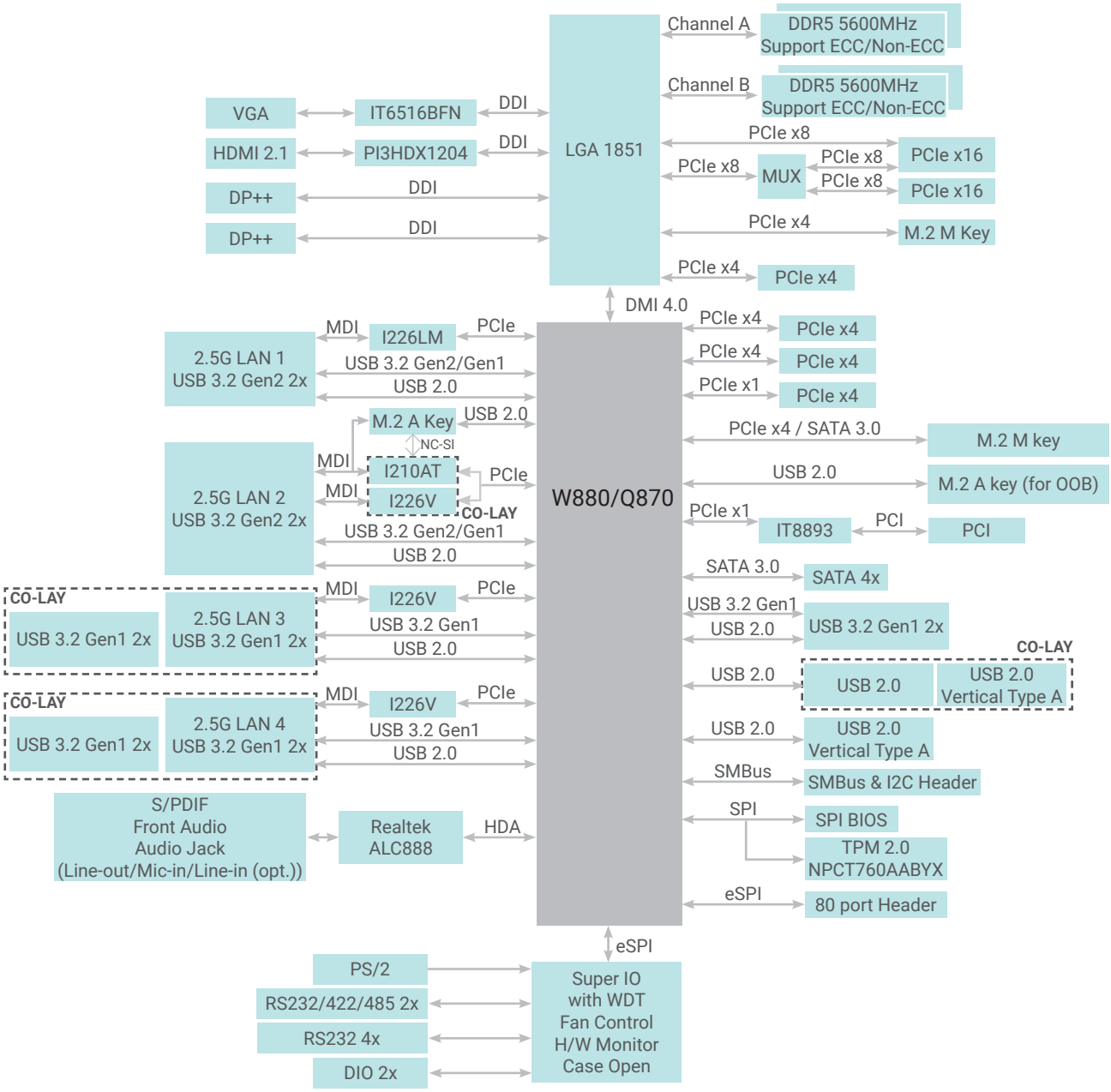

MECHANICAL DRAWING

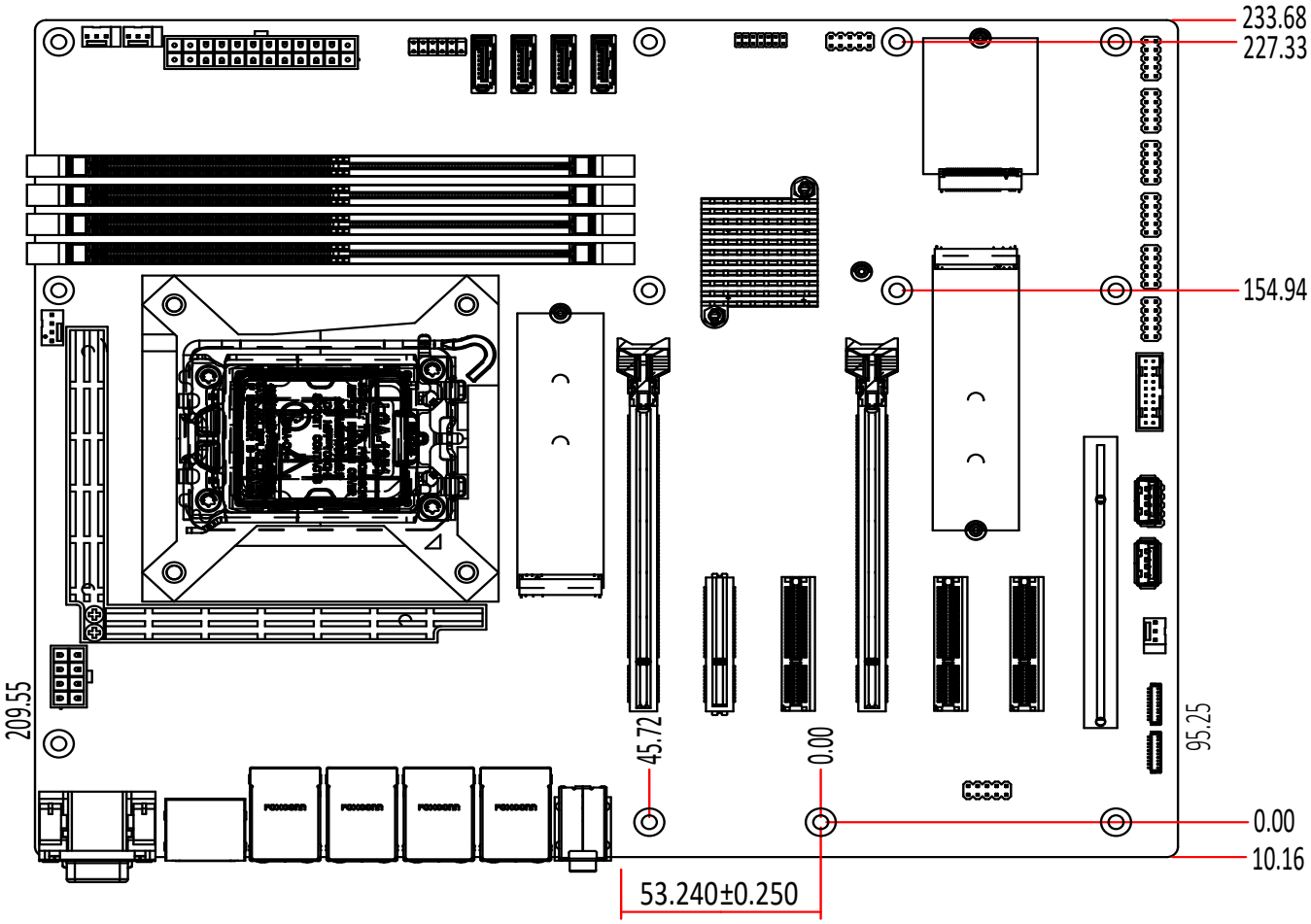

SPECIFICATION

Model Name		ARS630-W880	ARS630-Q870
SYSTEM	Processor	Intel® Core™ Ultra LGA 1851 Socket Processors, TDP support up to 125W Intel® Core™ Ultra 9 285 (24 Cores, 36M Cache, up to 5.6 GHz); 65W Intel® Core™ Ultra 9 285T (24 Cores, 36M Cache, up to 5.4 GHz); 35W Intel® Core™ Ultra 7 265 (20 Cores, 30M Cache, up to 5.3 GHz); 65W Intel® Core™ Ultra 7 265T (20 Cores, 30M Cache, up to 5.3 GHz); 35W Intel® Core™ Ultra 5 245 (14 Cores, 24M Cache, up to 5.1 GHz); 65W Intel® Core™ Ultra 5 245T (14 Cores, 24M Cache, up to 5.1 GHz); 35W Intel® Core™ Ultra 5 225 (10 Cores, 20M Cache, up to 4.9 GHz); 65W Intel® Core™ Ultra 5 225T (10 Cores, 20M Cache, up to 4.9 GHz); 35W	
	Chipset	Intel® W880 Chipset	Intel® Q870 Chipset
	Memory	Four 288-pin UDIMM up to 256GB (ECC/Non-ECC) Dual Channel DDR5 up to 5600 MHz *Speed support list follow User's Manual	Four 288-pin UDIMM up to 256GB (Non-ECC) Dual Channel DDR5 up to 5600 MHz *Speed support list follow User's Manual
	BIOS	AMI SPI 256Mbit	AMI SPI 256Mbit
GRAPHICS	Controller	Intel® UHD Graphics 700 series	Intel® UHD Graphics 700 series
	Feature	OpenGL 4.5, DirectX 12, OpenCL 2.1 **HW Decode:** AVC/H.264, MPEG2, VC1/WMV9, JPEG/MJPEG, HEVC/H265, VP8, VP9 **HW Encode:** MPEG2, AVC/H264, JPEG, HEVC/H265, VP8, VP9	OpenGL 4.5, DirectX 12, OpenCL 2.1 **HW Decode:** AVC/H.264, MPEG2, VC1/WMV9, JPEG/MJPEG, HEVC/H265, VP8, VP9 **HW Encode:** MPEG2, AVC/H264, JPEG, HEVC/H265, VP8, VP9
	Display	1 x VGA 2 x DP++ 1 x HDMI 2.0a **VGA:** resolution up to 1920x1200 @ 60Hz **DP++:** resolution up to 4096x2304 @ 60Hz **HDMI:** resolution up to 4096x2160 @ 24Hz	1 x VGA 2 x DP++ 1 x HDMI 2.0a **VGA:** resolution up to 1920x1200 @ 60Hz **DP++:** resolution up to 4096x2304 @ 60Hz **HDMI:** resolution up to 4096x2160 @ 24Hz
	Quad Displays	VGA + 2 DP++ + HDMI	VGA + 2 DP++ + HDMI
EXPANSION	Interface	2 x PCIe x16 (Gen 5, 16 or 8+8) **Support PCIE1/PCIE4 : single at x16(PCIE1)** **Support PCIE1/PCIE4 : dual at x8 (PCIE1)/x8 (PCIE4)** **Support PCIE1 : Riser card x16 or x8/x8 selected by Jumper**	2 x PCIe x16 (Gen 5, 16 or 8+8) **Support PCIE1/PCIE4 : single at x16(PCIE1)** **Support PCIE1/PCIE4 : dual at x8 (PCIE1)/x8 (PCIE4)** **Support PCIE1 : Riser card x16 or x8/x8 selected by Jumper**
		1 x PCIE x4 (Gen 4, x1, open edge slot)	1 x PCIE x4 (Gen 4, x1, open edge slot)
		3 x PCIe x4 (Gen 4, open edge slot)	3 x PCIe x4 (Gen 4, open edge slot)
		1 x PCI	1 x PCI
	M.2	1 x M.2 2242/2260/2280 M key (PCIe x4 Gen5 NVMe) 1 x M.2 2242/2260/2280 M key (PCIe x4 Gen4 NVMe, SATA) 1 x M.2 A key for M2-OOB	1 x M.2 2242/2260/2280M key (PCIe x4 Gen5 NVMe) 1 x M.2 2242/2260/2280 M key (PCIe x4 Gen4 NVMe, SATA) 1 x M.2 A key for M2-OOB
AUDIO	Audio Codec	Realtek ALC888S	Realtek ALC888S
ETHERNET	Controller	1 x Intel® I226-LM 1 x Intel® I210-AT (co-lay I226-V) 2 x Intel® I226-V	1 x Intel® I226-LM 1 x Intel® I210-AT (co-lay I226-V)
REAR I/O	Ethernet	3 x 2.5GbE (RJ-45) 1 x 1GbE (RJ-45, opt. 2.5GbE)	1 x 2.5GbE (RJ-45) 1 x 1GbE (RJ-45, opt. 2.5GbE)
	USB	4 x USB 3.2 Gen 2 4 x USB 3.2 Gen 1	4 x USB 3.2 Gen 2 4 x USB 3.2 Gen 1
	Display	1 x VGA 2 x DP++ 1 x HDMI	1 x VGA 2 x DP++ 1 x HDMI
	Audio	1 x Line-out 1 x Mic-in 1 x Line-in (opt.)	1 x Line-out 1 x Mic-in 1 x Line-in (opt.)
INTERNAL I/O	Serial	2 x RS-232/422/485 4 x RS-232	2 x RS-232/422/485 4 x RS-232
	USB	2 x USB 3.2 Gen1 1 x USB 2.0 Vertical Type A 2 x USB 2.0 Pin Header (2.54mm pitch)	2 x USB 3.2 Gen1 1 x USB 2.0 Vertical Type A 2 x USB 2.0 Pin Header (2.54mm pitch)
	Audio	1 x Front Audio 1 x S/PDIF	1 x Front Audio 1 x S/PDIF
	SATA	4 x SATA 3.0 (up to 6Gb/s) RAID 0/1/5/10	4 x SATA 3.0 (up to 6Gb/s) RAID 0/1/5/10
	PS/2	1 x PS/2 (2.54mm pitch)	1 x PS/2 (2.54mm pitch)
	DIO	4-IN / 8-OUT DIO	4-IN / 8-OUT DIO
	eSPI	1 x eSPI	1 x eSPI
	SMBus	1 x SMBus	1 x SMBus
WATCHDOG TIMER	Output & Interval	System Reset, Programmable via Software from 1 to 255 Seconds	System Reset, Programmable via Software from 1 to 255 Seconds
SECURITY	TPM	TPM 2.0	TPM 2.0

SPECIFICATION

Model Name		ARS630-W880	ARS630-Q870
POWER	**Type**	ATX	ATX
	Connector	8-pin ATX 12V power 24-pin ATX power	8-pin ATX 12V power 24-pin ATX power
	Consumption	TBD	TBD
	RTC Battery	CR2032 Coin Cell	CR2032 Coin Cell
OS SUPPORT	**Microsoft**	Windows 10 IoT Enterprise 64-bit Windows 11 IoT Enterprise 64-bit	Windows 10 IoT Enterprise 64-bit Windows 11 IoT Enterprise 64-bit
	Linux	Linux	Linux
ENVIRONMENT	**Temperature**	**Operating:** -5 to 65°C **Storage:** -30 to 60°C with RTC Battery; -40 to 85°C without RTC Battery	**Operating:** -5 to 65°C **Storage:** -30 to 60°C with RTC Battery; -40 to 85°C without RTC Battery
	Humidity	**Operating:** 5 to 95% RH **Storage:** 5 to 95% RH	**Operating:** 5 to 95% RH **Storage:** 5 to 95% RH
	MTBF	TBD	TBD
MECHANISM	**Dimensions**	ATX Form Factor 305mm (12") x 244mm (9.6")	ATX Form Factor 305mm (12") x 244mm (9.6")
	Height	**PCB:** 1.6mm **Top Side:** 33.3mm **Bottom Side:** 4mm	**PCB:** 1.6mm **Top Side:** 33.3mm **Bottom Side:** 4mm
CERTIFICATIONS	**Certifications**	CE, FCC Class B, RoHS, UKCA, LVD, KC	CE, FCC Class B, RoHS, UKCA, LVD, KC

ORDERING INFORMATION

Model Name	P/N	PCH	USB 3.2 Gen2	USB 3.2 Gen1	USB 2.0	SATA 3.0	TPM 2.0	1GbE LAN	2.5GbE LAN
ARS630-W880	770-ARS6301-000G	W880	4	6	3	4	TPM 2.0	0	4
ARS630-W880	770-ARS6301-100G	W880						1	3
ARS630-Q870	770-ARS6301-200G	Q870						0	2
ARS630-Q870	770-ARS6301-300G	Q870						1	1

PACKING LIST

- 1 ARS630 motherboard
- 1 COM port cables (Length: 300mm, 2 x COM ports)
- 1 Serial ATA data cable (Length: 500mm)
- 1 I/O shield
- 1 M.2 screw/standoff

OPTIONAL ITEMS

· USB 2.0 port cable (Length: 350/398mm)	A81-001066-016G
· USB 3.2 Gen1 port cable (Length: 320mm)	A81-001196-023G
· COM port cable (Length: 300mm, 2 x COM ports)	A81-015026-023G
· Serial ATA data cable (Length: 500mm, W/LOCK)	332-553001-005G
· Serial ATA data cable (Length: 500mm, W/LOCK, 90D)	A81-002128-017G
· Thermal solution (For 35W, Height: 29.39mm)	A71-101136-000G
· Thermal solution (For 65W, Height: 46mm)	A71-101137-000G
· Thermal solution (For 95W/125W, Height: 110mm)	A71-101145-000G
· DP to HDMI Dongle	612-D2H13M-000G
· M.2-COM4 (M.2 serial port module)	770-M2COM1-000G
· M.2-2LAN (M.2 LAN port module)	770-M22LN2-000G
· M.2-2PSE (M.2 PSE module)	770-M22PS2-000G

DFI reserves the right to change the specifications at any time prior to the product's release. Changes thereafter will be based on the product's revision. Please contact your sales representative for the exact revision offered in your area. All product names mentioned are trademarks of their respective companies. ©September 8, 2026 DFI Inc.