IoT Solutions Alliance

Q370

CS330-Q370

Desktop

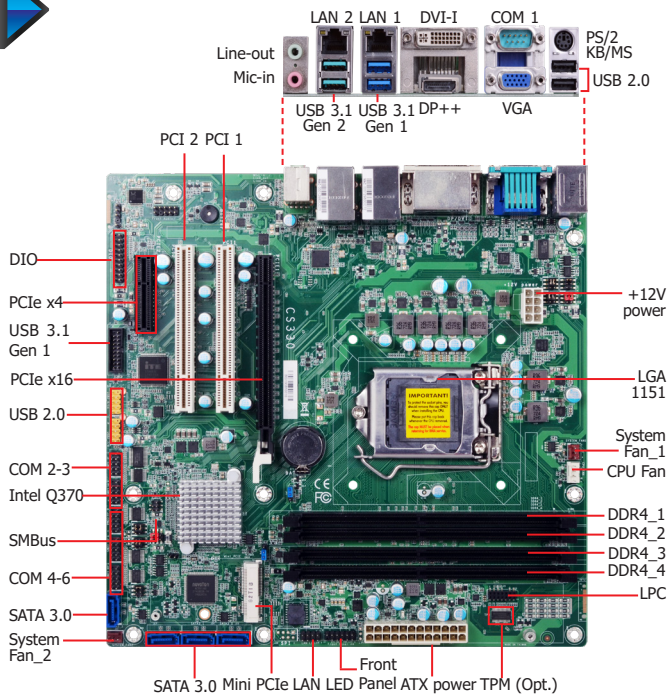

Features

- **4 DDR4 DIMM up to 128GB**
- **Three display ports: VGA, DVI-D, DP++ Supports three independent displays**
- **DP++ resolution up to 4096x2160 @ 60Hz DVI-D resolution up to 1920x1200 @ 60Hz**
- **Multiple expansion: 1 PCIe x16, 1 PCIe x4, 2 PCI, 1 Mini PCIe**
- **Rich I/O: 2 Intel GbE, 6 COM, 2 USB 3.1 Gen 2, 4 USB 3.1 Gen 1, 6 USB 2.0**

E131107

Ordering Information

Model Name	P/N	Memory	GbE	RS-232 /422/485	RS-232	USB 3.1 Gen 1	USB 3.1 Gen 2	USB 2.0	TPM 2.0	Power	Thermal	Temp.
CS330-Q370CRM	**770-CS3303-100G**	4 DIMM	2	2	4	4	2	6	0	24-pin ATX/8-pin ATX 12V	Active	0 to 60°C
CS330-Q370CRM	**770-CS3303-300G**	4 DIMM	2	2	4	4	2	6	1	24-pin ATX/8-pin ATX 12V	Active	0 to 60°C

Mechanical Drawing

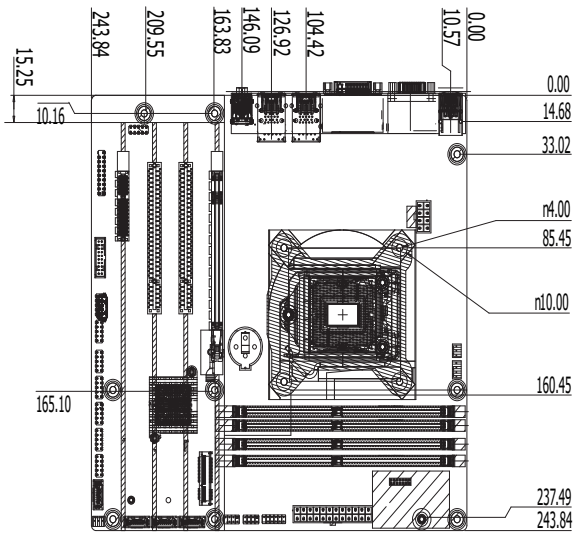

Block Diagram

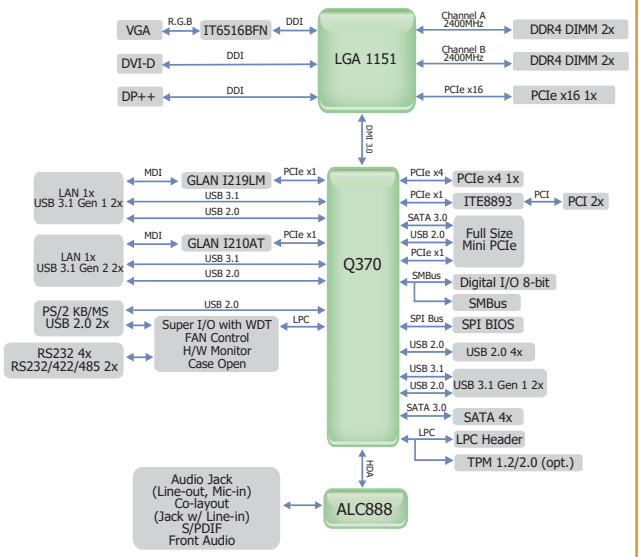

Specifications

SYSTEM	**Processor**	8th Generation Intel® Core™ /Pentium®/Celeron® LGA 1151 Socket Processors: Intel® Core™ i7-8700 (6 Cores, 12M Cache, up to 4.6 GHz); 65W Intel® Core™ i7-8700T (6 Cores, 12M Cache, up to 4.0 GHz); 35W Intel® Core™ i5-8500 (6 Cores, 9M Cache, up to 4.1 GHz); 65W Intel® Core™ i5-8500T (6 Cores, 9M Cache, up to 3.5 GHz); 35W Intel® Core™ i3-8100 (4 Cores, 6M Cache, 3.6 GHz); 65W Intel® Core™ i3-8100T (4 Cores, 6M Cache, to 3.1 GHz); 35W Intel® Pentium® G5400 (2 Cores, 4M Cache, 3.7 GHz); 58W Intel® Pentium® G5400T (2 Cores, 4M Cache, 3.1 GHz); 35W Intel® Celeron® G4900 (2 Cores, 2M Cache, 3.1 GHz); 54W Intel® Celeron® G4900T (2 Cores, 2M Cache, 2.9 GHz); 35W 9th Generation Intel® Core™ LGA 1151 Socket Processors: Intel® Core™ i7-9700TE (8 Cores, 12M Cache, up to 3.8 GHz); 35W Intel® Core™ i5-9500E (6 Cores, 9M Cache, up to 4.2 GHz); 65W Intel® Core™ i5-9500TE (6 Cores, 9M Cache, up to 3.6 GHz); 35W Intel® Core™ i3-9100E (4 Cores, 6M Cache, 3.7 GHz); 65W Intel® Core™ i3-9100TE (4 Cores, 6M Cache, to 3.2 GHz); 35W
	Chipset	Intel® Q370 Chipset
	Memory	Four 288-pin DIMM up to 128GB Dual Channel DDR4 2400/2666 MHz
	BIOS	AMI SPI 128Mbit
GRAPHICS	**Controller**	Intel® HD Gen 9 Graphics
	Feature	OpenGL 5.0, DirectX 12, OpenCL 2.1 HW Decode: AVC/H.264, MPEG2, VC1/WMV9, JPEG/MJPEG, HEVC/H265, VP8, VP9 HW Encode: MPEG2, AVC/H264, JPEG, HEVC/H265, VP8, VP9
	Display	1 x VGA VGA: resolution up to 1920x1200 @ 60Hz 1 x DVI-I (DVI-D signal) DVI-D: resolution up to 1920x1200 @ 60Hz 1 x DP++ DP++: resolution up to 4096x2160 @ 60Hz
	Triple Displays	VGA + DVI-D + DP++
EXPANSION	**Interface**	1 x PCIe x16 (Gen 3) 1 x Full-size Mini PCIe (USB/PCIe/mSATA, PCIe by default) 1 x PCIe x4 (Gen 3) 2 x PCI
AUDIO	**Audio Codec**	Realtek ALC888
ETHERNET	**Controller**	1 x Intel® I210AT (10/100/1000Mbps) 1 x Intel® I219LM with iAMT12.0 (10/100/1000Mbps) (only Core i7/i5 supports iAMT)
REAR I/O	**Ethernet**	2 x GbE (RJ-45)
	USB	2 USB 3.1 Gen 2 2 USB 3.1 Gen 1 2 USB 2.0
	Serial	1 x RS-232/422/485 (RS-232 w/ power) (DB-9)
	PS/2	1 x PS/2 (mini-DIN-6)
	Display	1 x VGA 1 x DVI-I (DVI-D signal) 1 x DP++
	Audio	1 x Line-out 1 x Mic-in 1 x Line-in (opt.)
INTERNAL I/O	**Serial**	1 x RS-232/422/485 (RS-232 w/ power) (2.54mm pitch) 4 x RS-232
	USB	2 x USB 3.1 Gen 1 (2.00mm pitch) 4 x USB 2.0 (2.54mm pitch)
	Audio	1 x S/PDIF 1 x Front Audio Header
	SATA	4 x SATA 3.0 (up to 6Gb/s) RAID 0/1/5/10
	DIO	1 x 8-bit DIO
	LPC	1 x LPC
	SMBus	1 x SMBus
WATCHDOG TIMER	**Output & Interval**	System Reset, Programmable via Software from 1 to 255 sec/min
SECURITY	**TPM**	Infineon TPM2.0/1.2 (optional)
POWER	**Type**	ATX
	Connector	8-pin ATX 12V power 24-pin ATX power
	Consumption	Typical: i7-8700K: 3.3V @ 0.29A (0.957Watt); 5V @ 0.53A (2.65Watt); 12V @ 1.08A (12.96Watt) Max.: i7-8700K:3.3V @ 0.49A (1.617Watt); 5V @ 0.53A (2.65Watt); 12V @ 13.39A (160.68Watt)
	RTC Battery	CR2032 Coin Cell
OS SUPPORT		Windows 10 IoT Enterprise Linux
ENVIRONMENT	**Temperature**	Operating: 0 to 60°C Storage: -40 to 85°C
	Humidity	Operating: 5 to 90% RH Storage: 5 to 90% RH
	MTBF	535,676 hrs @ 25°C; 352,865 hrs @ 40°C ; 303,603 hrs @ 45°C ; 189,856 hrs @ 60°C Calculation Model: Telcordia Issue 4 Environment: GB, GC - Ground Benign, Controlled
MECHANICAL	**Dimensions**	microATX form factor 244mm (9.6") x 244mm (9.6")
	Height	PCB: 1.6mm Top Side: 31.47mm, Bottom Side: 4.4mm
CERTIFICATION		UL, CE, FCC, RoHS, KCC

Packing List

• 1 CS330-Q370 motherboard	
• 1 COM port cable (W/Bracket, Length: 300mm, 2 x COM ports)	A81-015026-023G
• 1 Serial ATA data cable (W/LOCK, Length: 500mm)	332-553001-005G
• 1 Screw of Mini PCIE card	531-510180-000G
• 1 I/O shield	A49-KD6000-000G

Optional Items

• USB 2.0 port cable (Length: 350mm)	A81-001066-016G
• USB 3.0 port cable (Length: 350mm)	A81-001196-023G
• COM port cable (Length: 300mm, 2 x COM ports)	A81-015026-023G
• Serial ATA data cable (Length: 500mm)	332-553001-005G
• Thermal solution (For 35W, Height: 37.3mm)	A71-101107-000G
• Thermal solution (For 65W, Height: 74.47mm)	A71-101158-000G
• Thermal solution (For 95W, Height: 76.6mm)	A71-101143-000G
• LPC EXT-RS232 module (4 x RS232 ports)	770-EXTRS1-000G
• LPC EXT-RS485 module (4 x RS485 ports)	770-EXTRS1-100G
• DP to HDMI Dongle	612-D2H13M-000G

DFI reserves the right to change the specifications at any time prior to the product's release. Changes thereafter will be based on the product's revision. Please contact your sales representative for the exact revision offered in your area. All product names mentioned are trademarks of their respective companies. © September 8, 2026 DFI Inc.