C246

CS332-C246

Desktop

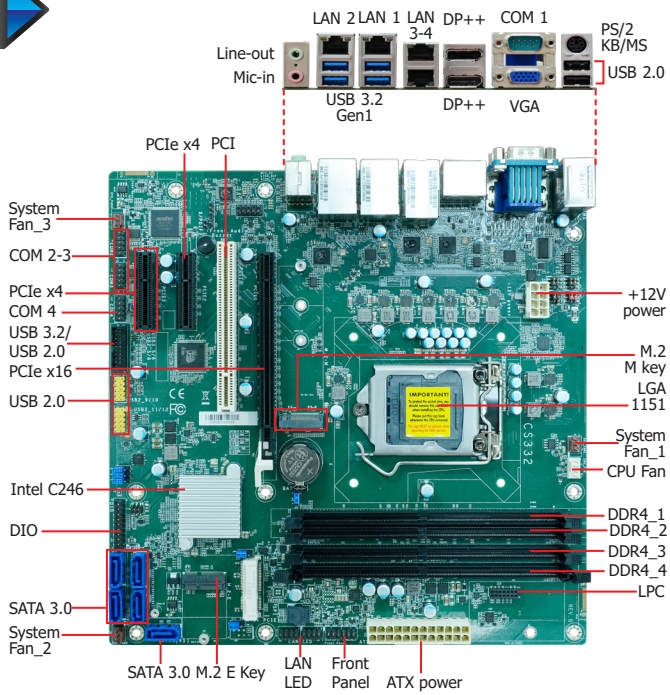

Features

- **4 DDR4 DIMM up to 128GB**
- **Dual display ports: VGA + DP++ + DP++ Supports triple independent displays**
- **DP++ resolution up to 4096x2160 @ 60Hz VGA resolution up to 1920x1200 @ 60Hz**
- **Multiple expansion: 1 PCIe x16, 2 PCIe x4, 1 PCI, 1 MiniPCIe, 1 M.2 M key (support Optane Memory), 1 M.2 E key**
- **Rich I/O: Up to 4 GbE (2 default), 4 COM, 6 USB 3.2 Gen1, 6 USB 2.0**

2 Extension Modules for Additional 4 COM Ports (via the LPC connector)

DFI's Proprietary Technology

EXT-RS232
- 4 RS232

EXT-RS485
- 4 RS485

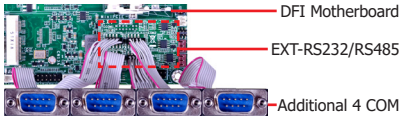

Ordering Information

Model Name	P/N	Memory	GbE	RS-232/422/485	RS-232	USB 3.2 Gen 1	USB 2.0	TPM 2.0	Power	Thermal	Temp.
CS332-C246	770-CS3322-000G	4 DIMM	2	1	3	6	6	0	ATX	Active	0 to 60°C
CS332-C246	770-CS3322-300G	4 DIMM	4	1	3	6	6	0	ATX	Active	0 to 60°C
CS332-C246	770-CS3322-400G	4 DIMM	2	1	3	6	6	1	ATX	Active	0 to 60°C

Mechanical Drawing

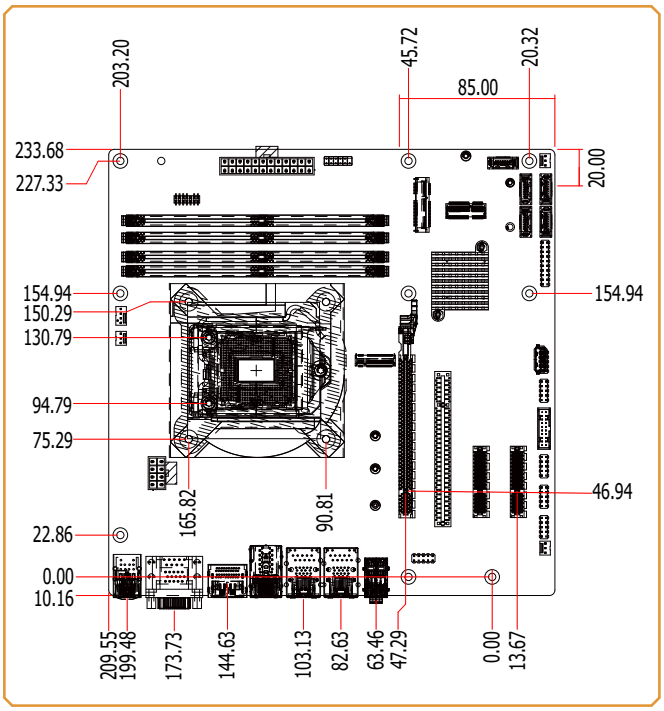

Block Diagram

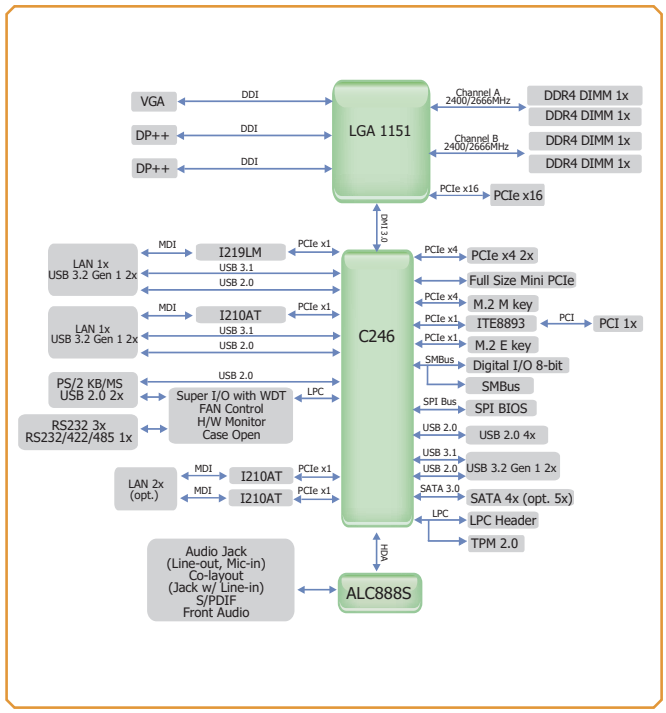

Specifications

SYSTEM	**Processor**	8th Generation Intel® Core™ /Pentium®/Celeron® LGA 1151 Socket Processors, TDP support up to 95W: Intel® Core™ i7-8700 (6 Cores, 12M Cache, up to 4.6 GHz); 65W Intel® Core™ i7-8700T (6 Cores, 12M Cache, up to 4.0 GHz); 35W Intel® Core™ i5-8500 (6 Cores, 9M Cache, up to 4.1 GHz); 65W Intel® Core™ i5-8500T (6 Cores, 9M Cache, up to 3.5 GHz); 35W Intel® Core™ i3-8100 (4 Cores, 6M Cache, 3.6 GHz); 65W Intel® Core™ i3-8100T (4 Cores, 6M Cache, to 3.1 GHz); 35W Intel® Pentium® G5400 (2 Cores, 4M Cache, 3.7 GHz); 58W Intel® Pentium® G5400T (2 Cores, 4M Cache, 3.1 GHz); 35W Intel® Celeron® G4900 (2 Cores, 2M Cache, 3.1 GHz); 54W Intel® Celeron® G4900T (2 Cores, 2M Cache, 2.9 GHz); 35W	9th Generation Intel® Core™ LGA 1151 Socket Processors, TDP support up to 95W: Intel® Core™ i7-9700E (8 Cores, 12M Cache, up to 4.4 GHz); 65W Intel® Core™ i7-9700TE (8 Cores, 12M Cache, up to 3.8 GHz); 35W Intel® Core™ i5-9500E (6 Cores, 9M Cache, up to 4.2 GHz); 65W Intel® Core™ i5-9500TE (6 Cores, 9M Cache, up to 3.6 GHz); 35W Intel® Core™ i3-9100E (4 Cores, 6M Cache, 3.7 GHz); 65W Intel® Core™ i3-9100TE (4 Cores, 6M Cache, to 3.2 GHz); 35W
	Chipset	Intel® C246 Chipset	
	Memory	Four 288-pin DIMM up to 128GB	Dual Channel DDR4 2400/2666 MHz (ECC/non ECC support)
	BIOS	AMI SPI 128Mbit	
GRAPHICS	**Controller**	Intel® HD Gen 9 Graphics	
	Feature	OpenGL 5.0, DirectX 12, OpenCL 2.1 HW Decode: AVC/H.264, MPEG2, VC1/WMV9, JPEG/MJPEG, HEVC/H265, VP8, VP9 HW Encode: MPEG2, AVC/H264, JPEG, HEVC/H265, VP8, VP9	
	Display	1 x VGA 2 x DP++	VGA: resolution up to 1920x1200 @ 60Hz DP++: resolution up to 4096x2106 @ 60Hz
	Triple Displays	VGA + DP++ + DP++	
EXPANSION	**Interface**	1 x PCIe x16 (Gen 3) 2 x PCIe x4 (Gen 3) 1 x PCI	1 x MINI PCIE SLOT (Full Size) 1 x M.2 2242/2280 M key (PCIe Gen3 x 4 NVMe/Intel Optane Memory Support) 1 x M.2 2230 E key (PCIe x1/USB2.0)
AUDIO	**Audio Codec**	Realtek ALC888S	
ETHERNET	**Controller**	1 x Intel® i219LM PCIe (10/100/1000Mbps) (only Xeon, Core i7/i5 support iAMT) 1 x Intel® i210AT PCIe (10/100/1000Mbps) 2 x Intel® i210AT PCIe (10/100/1000Mbps) (opt. by request, MOQ required)	
REAR I/O	**Ethernet**	2 x GbE (RJ-45)	4 x GbE (RJ-45) (opt. by request, MOQ required)
	USB	4 x USB 3.2 Gen 1	2 x USB 2.0
	Serial	1 x RS-232/422/485 (RS-232 w/ power) (DB-9)	
	PS/2	1 x PS/2 (mini-DIN-6)	
	Display	1 x VGA	2 x DP++
	Audio	1 x Line-out 1 x Mic-in	1 x Line-in (colay, opt. by request, MOQ required)
INTERNAL I/O	**Serial**	3 x RS-232	
	USB	2 x USB 3.2 Gen 1	4 x USB 2.0 (2.54mm pitch)
	Audio	1 x S/PDIF, 1 x Front Audio Header	
	SATA	4 x SATA 3.0 (up to 6Gb/s) (opt. x5 SATA) RAID 0/1/5/10	
	DIO	1 x 8-bit DIO	
	LPC	1 x LPC (support LPC EXT-RS-232/485 module)	
	SMBus	1 x SMBus	
WATCHDOG TIMER	**Output & Interval**	System Reset, Programmable via Software from 1 to 255 sec/min	
SECURITY	**TPM**	TPM 2.0	
POWER	**Type**	ATX	
	Connector	8-pin ATX 12V power 24-pin ATX power	
	Consumption	Typical: i7-8700K: 3.3V @ 0.44A (1.452Watt); 5V @ 0.62A (3.1Watt); 12V @ 0.49A (5.88Watt) Max.: i7-8700K:3.3V @ 0.51A (1.683Watt); 5V @ 1.4A (7.0Watt); 12V @ 10.44A (128.25Watt)	
	RTC Battery	CR2032 Coin Cell	
OS SUPPORT		Windows 10 IoT Enterprise 64-bit	Linux
ENVIRONMENT	**Temperature**	Operating: -5 to 65°C Storage: -30 to 60°C with RTC Battery; -40 to 85°C without RTC Battery	
	Humidity	Operating: 5 to 90% RH	Storage: 5 to 90% RH
	MTBF	554,887 hrs @ 25°C; 312,271 hrs @ 45°C ; 193,870 hrs @ 60°C Calculation Model: Telcordia Issue 4 Environment: GB, GC - Ground Benign, Controlled	
MECHANICAL	**Dimensions**	microATX form factor	244mm (9.6") x 244mm (9.6")
	Height	PCB: 1.6mm	Top Side: 38.5mm, Bottom Side: 4.4mm
CERTIFICATION		CE, FCC, RoHS, UL	

Packing List

• 1 CS332-C246 motherboard	
• 1 Serial ATA data cable (W/LOCK, Length: 500mm)	332-553001-005G
• 1 I/O shield	A49-CS3320-000G A49-CS3320-010G
• 1 M.2 2242/2260/half mini PCIe standoff	A33-725019-090G
• 2 M.2 Screw	A32-112016-041G

Optional Items

• USB 2.0 port cable (Length: 350mm)	A81-001066-016G
• USB 3.1 Gen 1 cable (Length: 320mm)	A81-001196-023G
• COM port cable (Length: 300mm, 2 x COM ports)	A81-015026-023G
• Serial ATA data cable (Length: 500mm, W/LOCK)	332-553001-005G
• Thermal solution (For 35W, Height: 37.3mm)	A71-101107-000G
• Thermal solution (For 65W, Height: 74.47mm)	A71-101158-000G
• Thermal solution (For 95W, Height: 76.6mm)	A71-101143-000G
• LPC EXT-RS232 module (4 x RS232 ports)	770-EXTRS1-000G
• LPC EXT-RS485 module (4 x RS485 ports)	770-EXTRS1-100G
• DP to HDMI dongle	612-D2H13M-000G
• Front Audio cable (Length: 300mm)	A81-022022-016G

DFI reserves the right to change the specifications at any time prior to the product's release. Changes thereafter will be based on the product's revision. Please contact your sales representative for the exact revision offered in your area. All product names mentioned are trademarks of their respective companies. © September 8, 2026 DFI Inc.