AVerMedia NX215 Carrier board and NO115B/ TN115B/ NX215B/ D115ONB/ D115OXB Box PC

Applies to NVIDIA® Jetson Nano/TX2 NX/Xavier NX/ Orin Nano/ Orin NX module

AVerMedia Technologies, Inc.
No. 135, Jian 1st Rd., Zhonghe Dist., New Taipei City 23585, Taiwan
Tel: 886-2-2226-3630
Fax: 886-2-3234-4842
Sales and Marketing: Contact
Technical Support: Professional User

Table of Contents

Preface *3*

1.0 Introduction *9*

1.1 Product Specifications _____ 10

1.2 OPTION ACCESSORY _____ 12

2.0 Product Overview *13*

2.1 Block Diagram for Nano/TX2 NX/Xavier NX _____ 13

Block Diagram for Orin NX/Orin Nano _____ 14

2.2 Front View and Back View of Carrier board _____ 16

2.3 Front View and Three-Quarter View of BoxPC _____ 17

2.4 Connector Summary _____ 21

3.0 Feature Description *23*

3.1 Jetson module Connector _____ 23

3.2 RTC Battery Connector _____ 23

3.3 ATX 4P _____ 24

3.4 DC POWER JACK _____ 24

3.5 HDMI OUTPUT _____ 25

3.6 Micro SD Card Slot _____ 25

3.7 MIPI CSI-2 DPHY Lanes _____ 26

3.8 SerDes (V-by-One® HS) _____ 27

3.9 USB 3.1 Gen 1 Type-A Connector #1 , #2, #3 _____ 28

3.10 Gigabit Ethernet Connector _____ 28

3.11 Jetson platform/ USB 2.0 Micro B Connector _____ 29

3.12 RTC Battery Connector _____ 29

3.13 20-Pin GPIO expansion _____ 30

3.14 Optional Function Selection _____ 35

3.15 Power Button_____ 35

3.16 Recover Button_____ 36

4.0 Installation..... 37

4.1 BSP Setup Instructions 37

5.0 Software 38

6.0 Force Recovery Mode..... 47

7.0 Power Consumption 48

8.0 Accessory Drawings 49

8.1 Fan Module/ Adapter/ Power Cord..... 49

8.2 Dimension Drawings and Assembly Drawings 57

Preface

Disclaimer

The information contained in this user manual, including but not limited to any product specification is subject to change without notice. AVerMedia assumes no liability for any damages incurred directly or indirectly from any technical or typographical errors or omissions contained herein or for discrepancies between the product and the user manual.

Technical Support

If you experience the difficulty after reading this manual and/or using the product, please contact the reseller from which you purchased the product. In most cases, the reseller can help you with the product installation and the difficulty you encountered.

In case the reseller is not able to resolve your problem, our highly capable global technical support team can certainly assist you. Our technical support section is available 24 hours a day and 7 days a week through our website, with the click here. For more contact information, you may find it in the section of AVerMedia Global Offices.

Contact Enquiry

For more information of our products, pricing, and order placement, please fill in our inquiry form here, we will contact you within 24 hours.

Download User Manual

Please click the link here to download the file of this user manual from AVerMedia website.

Revision History

Revision	Date	Updates
Version 1.0	17 Nov, 2021	1st Released
Version 1.1	24 Nov, 2021	Update 8.0 power consumption
Version 1.2	12 Jan, 2022	Update DC power jack
Version 1.3	24 Jan, 2022	Update P9/P10 DC input range and Can bus
Version 1.4	18 Apr, 2022	Update P24 Gigabit Ethernet Connector
Version 1.5	17 May, 2022	Update P9/10/12/27/28/29/30/31/36 CAN bus spec update
Version 1.6	31 Oct, 2022	Update Product specification/Safety Precaution
Version 1.7	23 Nov, 2022	Update Carrier Board Interface/ Contact information
Version 1.8	18 Dec, 2022	Add D115OXB information
Version 1.9	31 March, 2023	Update D115OXB 20pin define
Version 2.0	23 May, 2023	Correct SW3/SW4 information
Version 2.1	6 July, 2023	Add D115ONB information
Version 2.2	31 July, 2023	Add instruction for how to flash BSP
Version 2.3	15 Sep, 2023	Update P10/P11 specification Correct SW3/SW4 information
Version 2.4	20 Sep, 2023	Update P10/P11 specification

AVerMedia Global Offices

https://www.avermedia.com/contact-us

Headquarters

Taiwan Office
No. 135, Jian 1st Rd., Zhonghe Dist., New Taipei City 23585,Taiwan
Tel: +886-2-2226-3630
Fax: +886-2-3234-4842
Sales & Marketing: Contact
Technical Support: Home users / Professional users

The Americas

USA Office
754 Charcot Avenue, San Jose, CA 95131
Sales & Marketing: Contact
Technical Support: Home users / Professional users

Brazil Office
Sales & Marketing: Contact
Technical Support: Home users / Professional users

Latin America Office
Sales & Marketing: Contact
Technical Support: Home users / Professional users

Europe

Head Office EU
AVT Solutions GmbH
Hanauer Landstrasse 291 B 60314 Frankfurt Hessen
Germany
Technical Support: Home users / Professional users

Russia Office
Sales & Marketing: Contact
Technical Support: Home users / Professional users
Professional Solutions Support Tel:
+7 (925) 834-0310

Spain Office
AVerMedia Information (Spain) S.L.
Ronda de Poniente no. 16 Planta Baja, Puerta K
28760 Tres cantos, Madrid. Spain
Spain:
Sales & Marketing: Contact
Technical Support: Home users / Professional users

Asia-Pacific

China Office
Room 1510, No.488, Hitech Plaza, South Wuning Rd., Jingan District, Shanghai, China
Tel: +86-021-5298 7985
Fax: +86-021-5298 7981
Sales & Marketing: Contact
Technical Support: Home users / Professional users

India Office
Sales & Marketing: Contact
Technical Support: Home users / Professional users

Japan Office
10F TOWA akihabara Bldg.1-8 Akihabara, Taito-ku, Tokyo, 110-0006 Japan
Sales & Marketing: Contact
Technical Support: Home users / Professional users

Thailand Office
Sales & Marketing: Contact
Technical Support: Home users / Professional users

Korea Office
Sales & Marketing: Contact
Technical Support: Home users / Professional users

Vietnam Office
5F, No. 596 Nguyen Dinh Chieu St., Ward 3, District 3, HCM City, Vietnam
Tel: +84-28-22 539 211
Fax: +84-28-22 539 210
Sales & Marketing: Contact
Technical Support: Home users / Professional users

Limited Product Warranty

AVerMedia provides the one-year product warranty. Should this product, in AVerMedia's opinion, fail to be in the good working order during the warranty period, AVerMedia will, at its option, repair or replace it at no charge, provided that the product has not been subjected to abuse, misuse, accident, disaster, or non-AVerMedia authorized modification or repair.

You may obtain the warranty service by delivering this product to an authorized AVerMedia business partner or to AVerMedia along with the proof of purchase. Product returned to AVerMedia must be pre-authorized by AVerMedia with an RMA (Return Material Authorization) number marked on the outside of the package and sent prepaid, insured, and packaged for the safe shipment. AVerMedia will return the product by prepaid shipment service.

It is not recommended to disassemble the box PC, which will impact the warranty. The limited product warranty is only valid over the serviceable life of the product. This is defined as the period during which all components are available. Should the product prove to be irreparable, AVerMedia reserves the right to substitute an equivalent product if available or to retract the product warranty if no replacement is available.

The above product warranty is the only warranty authorized by AVerMedia. Under no circumstances will AVerMedia be liable in any way for any damages, including any lost profits, lost savings, or other incidental or consequential damages arising out of the use of, or inability to use, such product.

Copyright Notice

The information contained in this document is subject to change without notice. AVerMedia shall not be liable for errors contained herein or for incidental consequential damages in connection with the furnishing, performance, or use of this material. This document contains proprietary information that is protected by copyright. All rights are reserved. No part of this document may be photocopied, reproduced, or translated to another language without the prior written consent by AVerMedia.

Trademark Acknowledgement

AVerMedia acknowledges all the trademarks, registered trademarks, and/or copyrights referred to in this document as the property of their respective owners. Not listing all possible trademarks or copyright acknowledgments does not constitute the lack of acknowledgment to the rightful owners of the trademarks and copyrights mentioned in this document.

ESD Warning

Electronic components and circuits are sensitive to Electrostatic Discharge (ESD). When handling any circuit board assemblies including AVerMedia products, it is highly recommended that ESD safety precautions can be observed. ESD safe best practices can include, but are not limited to the following ones.

1. Leave the circuit board in the antistatic package until it is ready to be installed.
2. Use a grounded wrist strap when handling the circuit board. At a minimum, you need to touch a grounded metal object to dissipate any static charge, which may be present on you.
3. Avoid handling the circuit board in the carpeted areas.
4. Handle the board by the edges and avoid the contact with the components.
5. Only handle the circuit boards in ESD safe areas, which may include ESD floor and/or table mats, wrist strap stations, and ESD safe lab coats.

Safety Precaution:

1. All cautions and warnings on the device should be noted.
2. For safety consideration, do NOT open the device if not a qualified service stuff.
3. Place the device on a solid surface during installation to prevent falls.
4. Keep the device away from humidity.
5. Do NOT leave this device in an un-controlled environment with temperatures beyond the device's permitted storage temperature to avoid damage.
6. All adaptors and cables supplied by AVerMedia are verified. Do NOT use any others not supplied by AVerMedia to avoid any malfunction or fires.
7. Make sure the power source matches the power rating of the device.
8. Place the power cord where people cannot step on it. Do not put anything on the power cord.
9. Always completely disconnect the power while the device is not usage or idle for a long time.
10. Disconnect the device from any AC supply before cleaning. While cleaning, use a damp cloth instead of liquid or spray detergents.
11. Make sure the device is installed near a power outlet and easy for accessible.
12. Do not cover the openings on the device to ensure optimal heat dissipation.

13. Watch out the heatsink or heat spreader of the device when the system is running.
14. Never pour any liquid into the openings. This could cause fire or electric shock.
15. The static electricity should be noted while installing any internal components. Consider to use a grounding wrist strap and put all electronic parts in static-shielded containers.

If the following situations occur, please contact our service personnel:

(1) The device is dropped or damaged
(2) Damaged power cord or plug
(3) Exposure to moisture
(4) Liquid intrusion into the device
(5) Any obvious signs of damage displayed on the device
(6) Device is not working as expected or in a manner as described in this manual

1.0 Introduction

AVerMedia NX215/ NO115B/ TN115B/ NX215B/ D D1115ONB/1115OXB includes fully featured carrier board which is all developed for NVIDIA® Jetson Nano(Version B01)/ /TX2 NX/ Xavier NX /Orin Nano/ Orin NX modules. AVerMedia provide not only the access to a great list of latest interfaces on NVIDIA® Jetson (Version B01)/ TX2 NX/ Xavier NX/Orin Nano/Orin NX modules but also two RJ-45 interface and one RTC battery as the function enrichment.

NX215/ NO115B/ TN115B/ NX215B/ D1115OXB provide HDMI video output , two USB 3.0 ports, two GbE RJ-45 port, 20-pin GPIO expansion, and one Micro-B USB 2.0 port for recovery.

Operating with NVIDIA® Jetson Nano(Version B01)/TX2 NX/ Xavier NX/Orin Nano/ Orin NX modules and the rich I/O functions, AVerMedia NX215/ NO115B/ TN115B/ NX215B/ D115ONB/D1115OXB is the perfect choice in building a compact, high performance AI edge computing platform for the intelligent video analytics applications.

1.1 Product Specifications

Model	**NX215**			
Type	Carrier board			
NVIDIA GPU SoC Module Compatibility	NVIDIA® Jetson Orin NX/Orin Nano module	NVIDIA® Jetson Xavier™ NX module	NVIDIA® Jetson TX2 NX module	NVIDIA® Jetson NANO (B01) module
Networking	2x GbE RJ-45 1xM.2. key E 2230 for wifi			2x GbE RJ-45
Display Output	1x HDMI 4Kp60 for Orin NX/ 4Kp30 for Orin Nano	2x HDMI 2.0 (3840 x 2160 at 60Hz)		1x HDMI 2.0 (3840 x 2160 at 60Hz)
Temperature	Operating temperature 0℃~70℃ Storage temperature -40℃ ~ 85℃ Relative humidity 40 ℃ @ 95%, Non-Condensing			
MIPI Camera Inputs	2x 2 lane MIPI CSI-2, 15 pin FPC 1mm Pitch Connector	2x 2 lane MIPI CSI-2, 15 pin FPC 1mm Pitch Connector 1x 4 lane MIPI CSI-2, 36 pin FPC 0.5mm Pitch Connector		
USB	3x USB 3.0 Type-A (1xinternal) 1x USB 2.0 Micro-B for recovery			
Storage	1xM.2. key M 2280 for SSD	1x micro-SD card slot 1xM.2. key M 2280 for SSD		
Expansion Header (EU terminal block) **(PCN20220406-2)**	20 pins: 2x I2C, 1x UART, 4x GPIOs, 1xCAN			20 pins: 2x I2C, 1x UART, 4x GPIOs
Expansion Header (EU terminal block) **(original)**	20 pins: 2x I2C, 1x UART, 4x GPIOs, 2xCAN			20 pins: 2x I2C, 1x UART, 4x GPIOs, 1xCAN
Power requirement	DCINJACK on board & ATX 4pin 12V/5A, 12~24V is recommended.			
Power Cord	US/JP/EU/UK/TW/AU/CN			
Fan Module	Heat sink with fan (optional)			
Buttons	Power and Recovery			
RTC Battery	Support RTC battery and Battery Life Monitoring by MCU			
PCB/Electronics Mechanical Info	120mm (W) x 90mm (L) x 26.5mm (H) Weight: 125 g			
Certifications	CE, FCC, KC			

Model	D115OXB/D115ONB	NX215B	TN115B	NO115B
Type	Box PC			
NVIDIA GPU SoC Module Compatibility	NVIDIA® Jetson Orin NX/Orin Nano module	NVIDIA® Jetson Xavier™ NX module	NVIDIA® Jetson TX2 NX module	NVIDIA® Jetson NANO (B01) module
Networking	2x GbE RJ-45 1xM.2. key E 2230 for wifi			2x GbE RJ-45
Display Output	1x HDMI 4Kp60 for Orin NX/ 4Kp30 for Orin Nano	2x HDMI 2.0 (3840 x 2160 at 60Hz)		1x HDMI 2.0 (3840 x 2160 at 60Hz)
Temperature	Operating temperature(based on module and usage)			
	0℃~60℃	0℃~60℃ for 8G	0℃~50℃	0℃~60℃
	Storage temperature -40℃ ~ 85℃ Relative humidity 40 ℃ @ 95%, Non-Condensing			
MIPI Camera Inputs (Internal)	2x 2 lane MIPI CSI-2, 15 pin FPC 1mm Pitch Connector	2x 2 lane MIPI CSI-2, 15 pin FPC 1mm Pitch Connector 1x 4 lane MIPI CSI-2, 36 pin FPC 0.5mm Pitch Connector		
USB	3x USB 3.0 Type-A (1x internal) 1x USB 2.0 Micro-B for recovery			
Storage	1xM.2. key M 2280 for SSD (SSD installed)	1x micro-SD card slot 1xM.2. key M 2280 for SSD		
Expansion Header (EU terminal block) **(PCN20220406-2)**	20 pins: 2x I2C, 1x UART, 4x GPIOs, 1xCAN			20 pins: 2x I2C, 1x UART, 4x GPIOs
Expansion Header (EU terminal block) **(original)**	20 pins: 2x I2C, 1x UART, 4x GPIOs, 2xCAN			20 pins: 2x I2C, 1x UART, 4x GPIOs, 1xCAN
Power requirement	DCINJACK on board & ATX 4pin 12V/5A, 12V~24V is recommended.			
Power Cord	US/JP/EU/UK/TW/AU/CN			
Fan Type	Fanless solution			
Buttons	Power and Recovery			
RTC Battery	Support RTC battery and Battery Life Monitoring by MCU			
PCB/Electronics Mechanical Info	W: 126mm (W) x 96mm (L) x 74mm (H) Weight: 1kg			
Certifications	CE, FCC, KC			

1.2 OPTION ACCESSORY

Item	NX215/ NX215B/ TN115B/ NO115B/D115OXB
NVIDIA® Jetson	NVIDIA® Jetson Orin NX for D115OXB NVIDIA® Jetson Orin Nano for D115ONB NVIDIA® Jetson Xavier NX for NX215B NVIDIA® Jetson TX2 NX for TN115B NVIDIA® Jetson Nano(Version B01) for NO115B
Power cord	EU/JP/TW/US/CN/UK/AU
MIPI Camera (internal I/O)	● For 15 pin MIPI connector 1. raspberry pi camera v2/ raspberry pi camera v3 2. Manufacturer: APPRO.PHO ■ B-04: IMX179(8M)MIPI, 1080P(30fps) ■ C-04: IMX290(2M)MIPI, 1080P(30fps) ■ C-05: IMX290(2M)+ISP(YUV), 1080P(30fps) ● For 36 pin MIPI connector (D115OXB/D115ONB doesn't support) 1. Manufacturer: APPRO.PHO ■ B-03: IMX334(4K) MIPI, 4K(30fps) ■ A-06: IMX334(4K) V-by-One® HS x1, 4K(30fps)

2.0 Product Overview

2.1 Block Diagram for Nano/TX2 NX/Xavier NX

(PCN20220406-2)

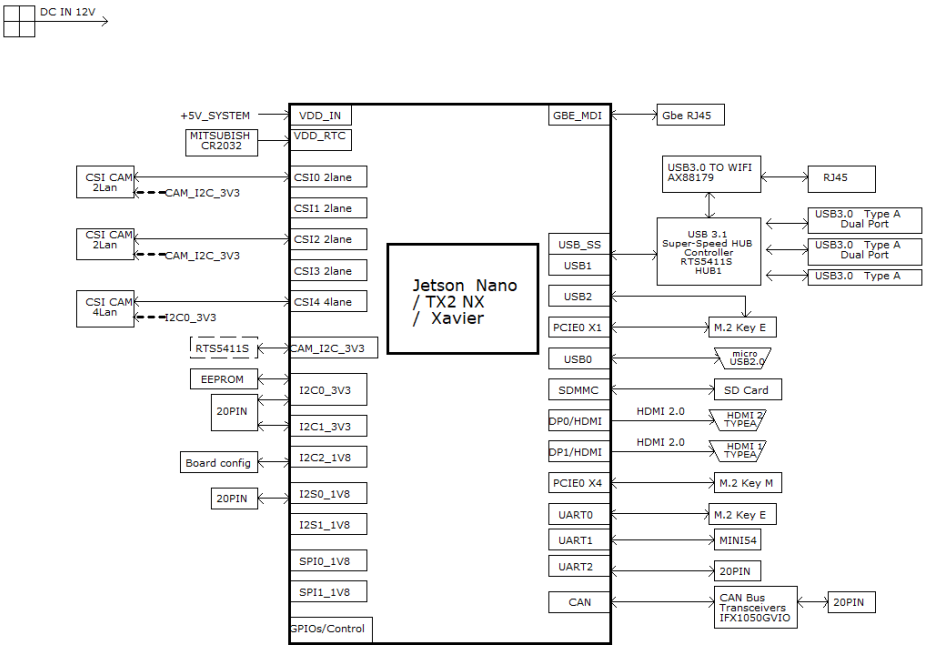

(Original)

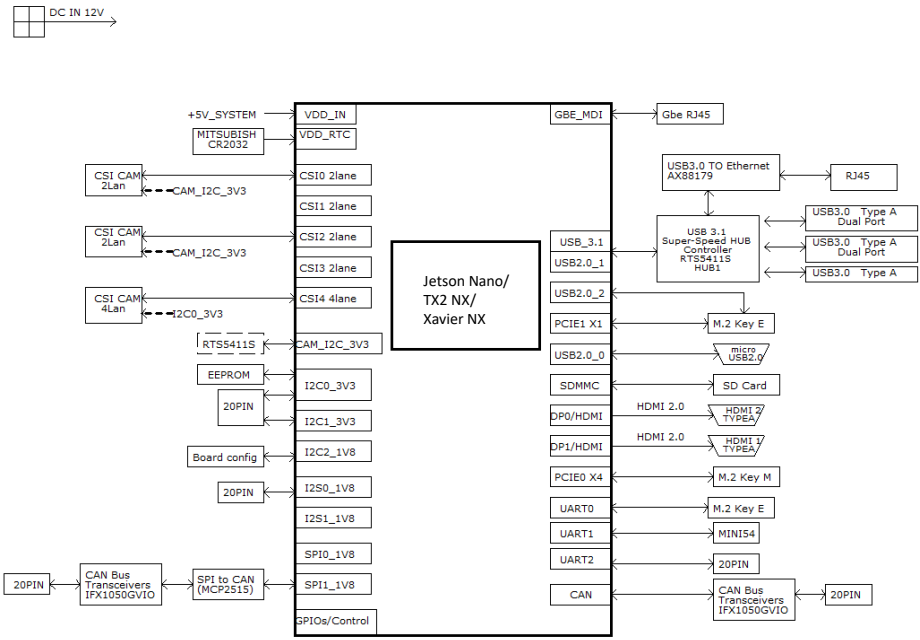
DC IN 12V
+5V_SYSTEM
MITSUBISH CR2032
CSI CAM 2Lan
CAM_I2C_3V3
CSI CAM 2Lan
CAM_I2C_3V3
CSI CAM 4Lan
I2C0_3V3
RTS5411S
EEPROM
20PIN
Board config
20PIN
20PIN
CAN Bus Transceivers IFX1050GVIO
SPI to CAN (MCP2515)
VDD_IN
VDD_RTC
CSI0 2lane
CSI1 2lane
CSI2 2lane
CSI3 2lane
CSI4 4lane
CAM_I2C_3V3
I2C0_3V3
I2C1_3V3
I2C2_1V8
I2S0_1V8
I2S1_1V8
SPI0_1V8
SPI1_1V8
GPIOs/Control
Jetson Nano/ TX2 NX/ Xavier NX
GBE_MDI
USB_3.1
USB2.0_1
USB2.0_2
PCIE1 X1
USB2.0_0
SDMMC
DP0/HDMI
DP1/HDMI
PCIE0 X4
UART0
UART1
UART2
CAN
Gbe RJ45
USB3.0 TO Ethernet AX88179
RJ45
USB 3.1 Super-Speed HUB Controller RTS5411S HUB1
USB3.0 Type A Dual Port
USB3.0 Type A Dual Port
USB3.0 Type A
M.2 Key E
micro USB2.0
SD Card
HDMI 2.0
HDMI 2 TYPEA
HDMI 2.0
HDMI 1 TYPEA
M.2 Key M
M.2 Key E
MINI54
20PIN
CAN Bus Transceivers IFX1050GVIO
20PIN

Block Diagram for Orin NX/Orin Nano

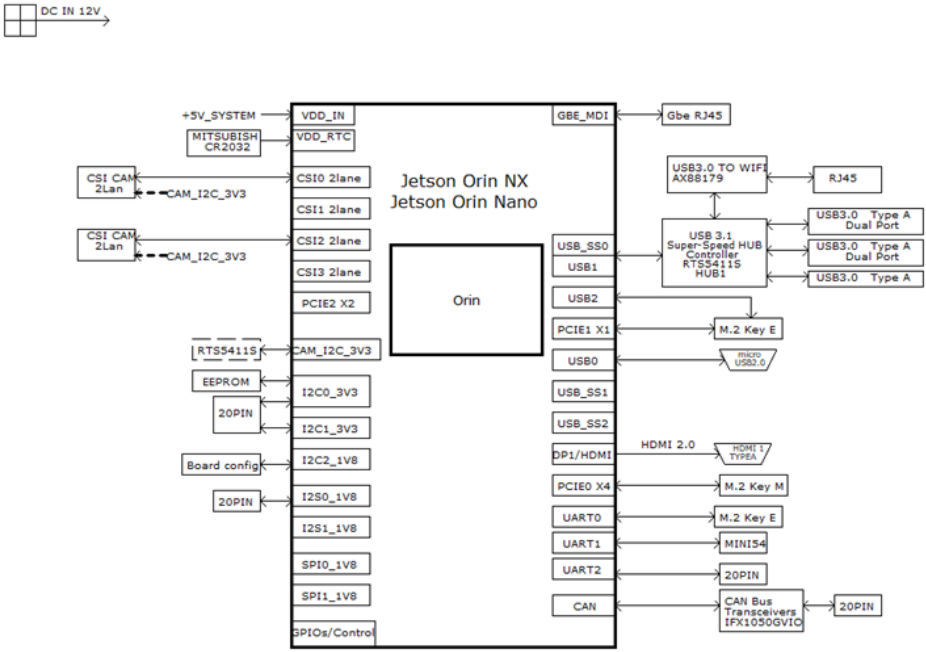

2.2 Front View and Back View of Carrier board

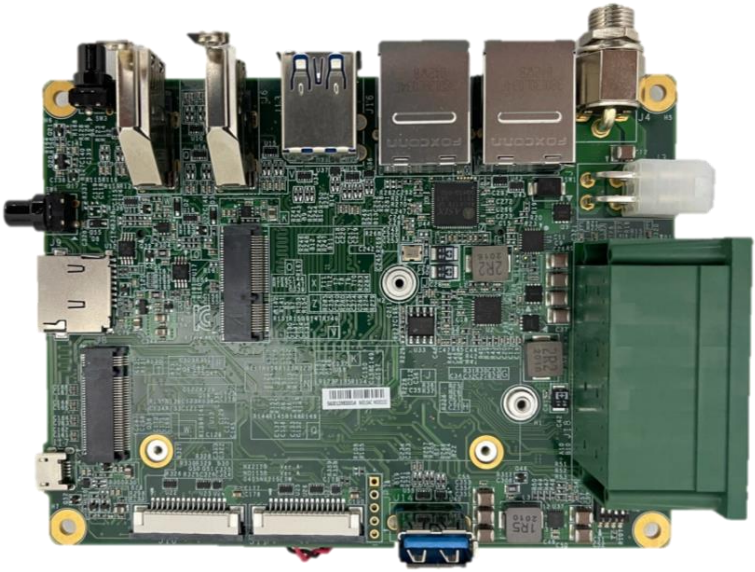

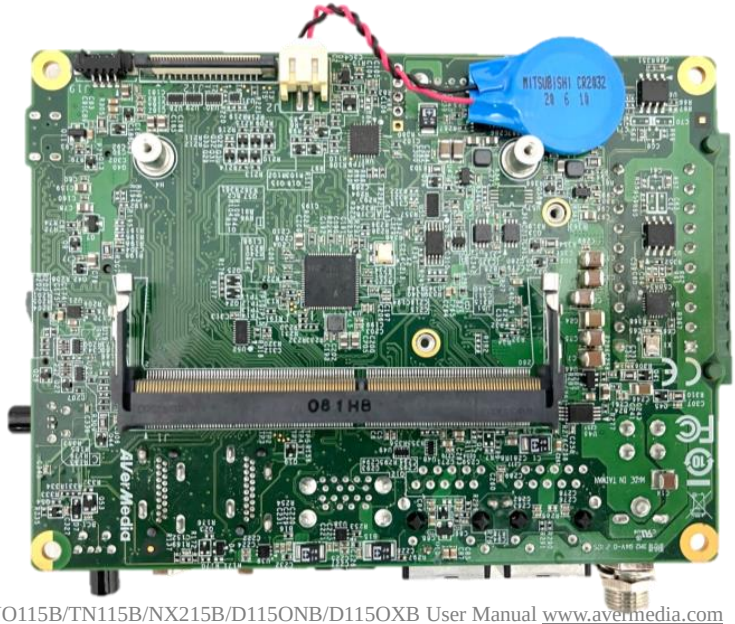

2.3 Front View and Three-Quarter View of BoxPC

Left view

Right view

Top view

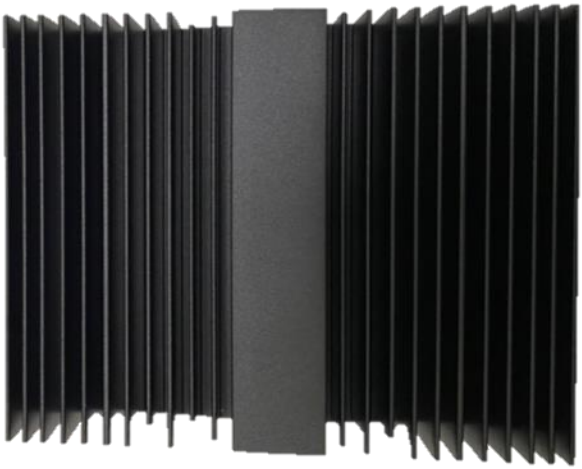

Front view

Rear view

Bottom view

(PCN20230609-1 & PCN 20230627)	
Original	New
Photo of HS1	Photo of HS2
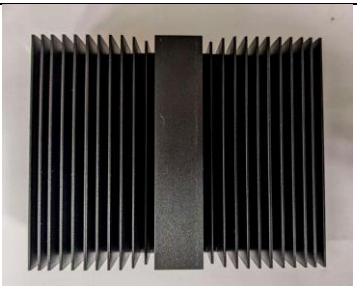	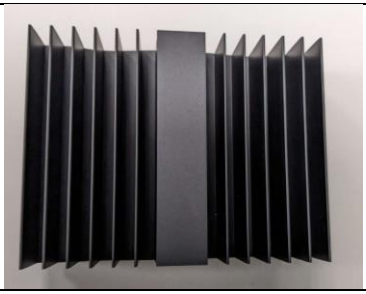
HS1_wo wallmount	HS2_wo wallmount
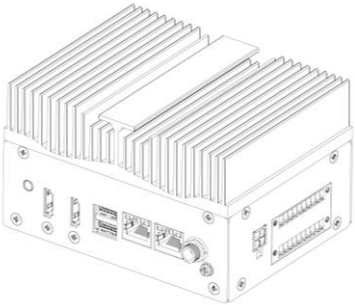	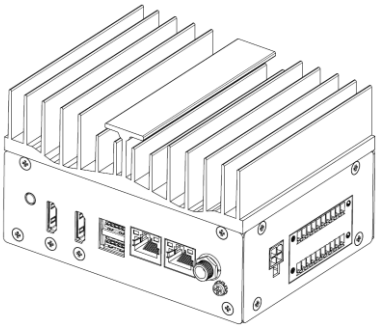
HS1_with wallmount	HS2_with wallmount
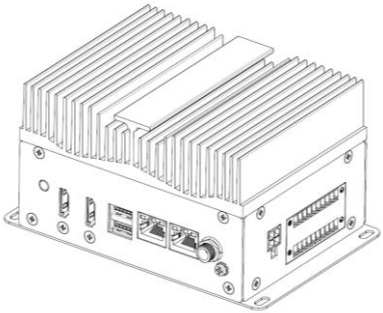	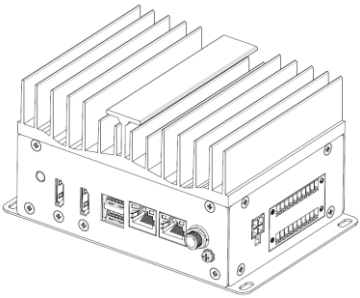

2.4 Connector Summary

Top View Interface

J1	SO-DIMM 260-pin 90° SMD Socket(H-9.2mm) for Jetson Nano / Jetson TX2 NX/Xavier NX/Orin NX
J2	External RTC Battery wafer
J12	FPC connector for 4-lane MIPI CSI-2
J19	Fan Wafer

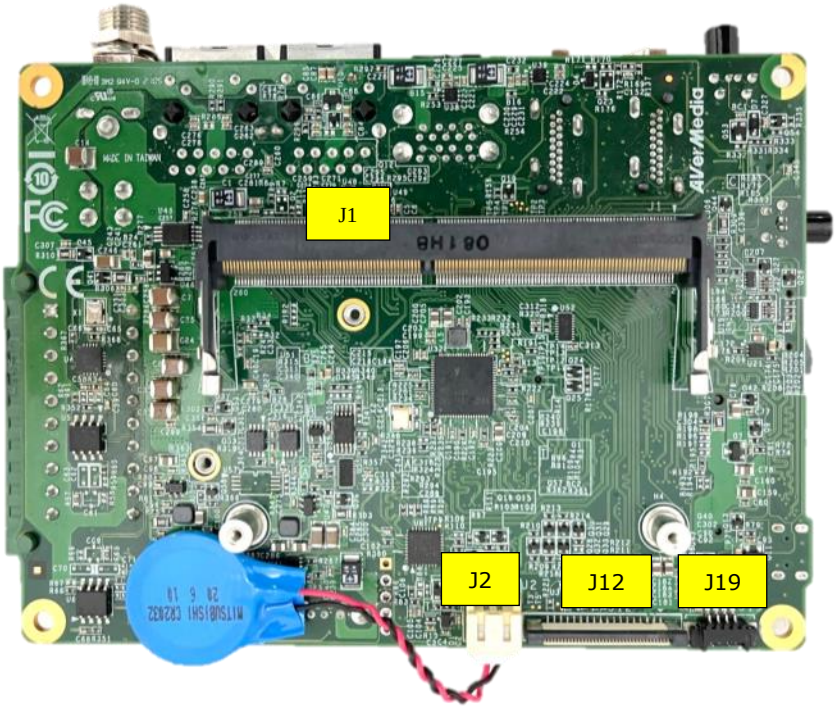

Bottom View Interface

J3	Input Power – 4.2mm Pitch 90° ATX Power 4P
J4	OD 5.5/2.5 DC Jack with Lock
J5	HDMI Type-A Vertical Side Connector with lock (Female)
J6	HDMI Type-A Vertical Side Connector with lock (Female)
J7	M.2 E-Key Socket
J8	M.2 M-Key Socket
J9	Micro SD Card Socket
J10	FPC connector for 2-lane MIPI CSI-2
J11	FPC connector for 2-lane MIPI CSI-2
J13	USB 3.1 Gen1 Dual Port Type A Connector
J14	USB 3.1 Gen1 Type A Connector
J15	Gigabit Ethernet Connector w/LEDs
J16	Gigabit Ethernet Connector w/LEDs
J17	USB 2.0 Micro B Connector
J18	20-pin Expansion Terminal Blocks
SW2	DIP switch
SW3	Power Button w/LEDs
SW4	Recovery Button w/LEDs

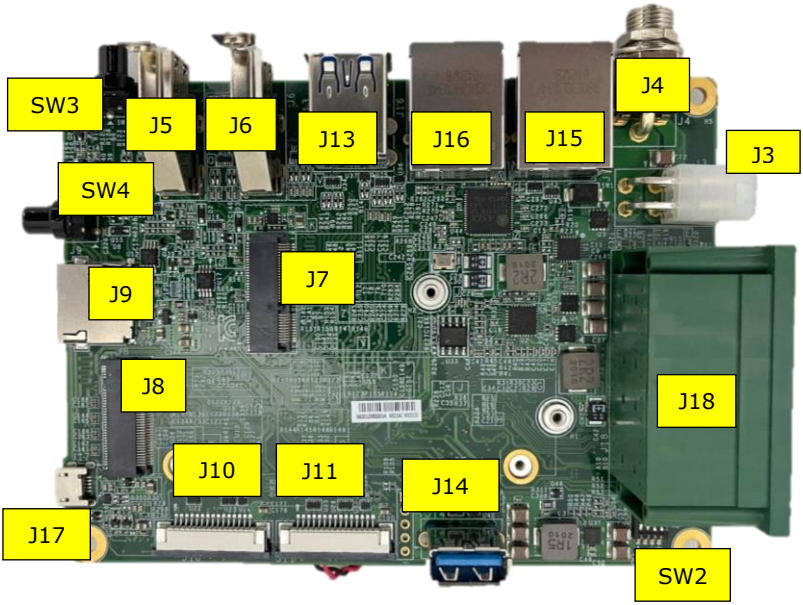

3.0 Feature Description

3.1 Jetson module Connector

Function	Provide connection with NVIDIA® Jetson NANO /TX2 NX/ Xavier NX/Orin Nano/ Orin NX modules	
Location	J1	
Type Description	SOCKET_DDR4 SO-DIMM_260PIN_90°	
Manufacturer and Part Number	Foxconn ASAA826-EASB0-7H	
Mating Connector	NVIDIA® Jetson Nano(Version B01) / TX2 NX/ Xavier NX/Orin Nano/Orin NX	
Pinout	Please refer to NVIDIA Jetson System-on-Module datasheet for pinout details.	
Remarks	https://developer.nvidia.com/ embedded/downloads	

3.2 RTC Battery Connector

Function	RTC battery for module	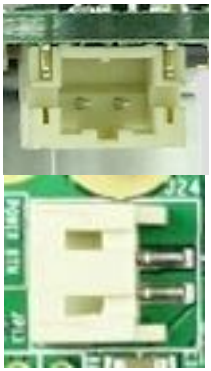
Location	J2	
Type Description	2.0mm wire-to-board header 02P type	
Manufacturer and Part Number	Pinrex, 721-94-02TWR9	
Mating Connector	Tyu, TU2001HNO-02	
Pinout	Pin # / Description PIN1 / 3V Power PIN2 / GND	
Remarks	RTC Battery: MITSUBISHI, CR2032 3V	

3.3 ATX 4P

Function	ATX 4P
Location	J3
Type Description	WAFER_2*2PIN
Manufacturer and Part Number	FPWD-42R2-04NAT
Mating Connector	power plug cable
Pinout	

Pin Number	Description
1	GND
2	GND
3	9-24V Power
4	9-24V Power

Remarks	None

3.4 DC POWER JACK

Function	DC power input
Location	J4
Type Description	2.5 mm power jack
Manufacturer and Part Number	JKCR, DCD 020 105B
Mating Connector	Any 2.5mm power plug cable
Pinout	

Pin Number	Description
1	12-24V Power
2	GND
3	GND

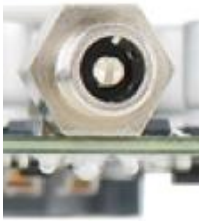

Remarks	

3.5 HDMI OUTPUT

Function	HDMI output connector	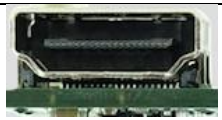 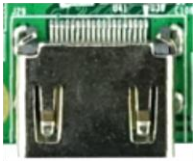
Location	J5,J6	
Type Description	HDMI Type-A female connector	
Manufacturer and Part Number	Compupack, ACNHM220028-001	
Mating Connector	Any HDMI standard Type-A interface cable or device.	
Pinout	Please refer to HDMI standard.	
Remarks	None	

3.6 Micro SD Card Slot

Function	Micro SD Card	
Location	J9	
Type Description	SOCKET_MICRO SD CARD_9PIN_90°_SMD	
Manufacturer and Part Number	Fullglory, FG-0011BAAS09A	
Pinout	Refer to MicroSD card standard	
Remark	None	

3.7 MIPI CSI-2 DPHY Lanes

Function	MIPI camera module connector	
Location	J10 , J11	
Type Description	WAFER_15PIN_1 ㎜_90°	
Manufacturer and Part Number	CHAMPWAY AFA07-S15FCA-HF_FPC ZIF-LOWER	
Mating Connector	2 Lane MIPI CSI-2 camera connector (15Pin)	

Pinout

J10

PIN#	Description	PIN#	Description
Pin1	GND	Pin9	CSI0_CLK_P
Pin2	CSI0_D0_N	Pin10	GND
Pin3	CSI0_D0_P	Pin11	MIPI2_PWDN
Pin4	GND	Pin12	CAM2_MCLK
Pin5	CSI0_D1_N	Pin13	CSI0_I2C_SCL
Pin6	CSI0_D1_P	Pin14	CSI0_I2C_SDA
Pin7	GND	Pin15	+3V3_MIPI
Pin8	CSI0_CLK_N		

J11

PIN#	Description	PIN#	Description
Pin1	GND	Pin9	CSI2_CLK_P
Pin2	CSI2_D0_N	Pin10	GND
Pin3	CSI2_D0_P	Pin11	MIPI2_PWDN
Pin4	GND	Pin12	CAM2_MCLK
Pin5	CSI2_D1_N	Pin13	CSI2_I2C_SCL
Pin6	CSI2_D1_P	Pin14	CSI2_I2C_SDA
Pin7	GND	Pin15	+3V3_MIPI
Pin8	CSI2_CLK_N		

3.8 SerDes (V-by-One® HS)

Function	MIPI camera module connector	
Location	J12	
Type Description	WAFER_1*36PIN_0.5 ㎜_180°	
Manufacturer and Part Number	PINREX 979-44-93610A_ZIF FPC	
Mating Connector	4 Lane MIPI CSI-2 camera connector (36PIN)	

PIN OUT

Pin Number	Signal	Pin Number	Signal
1	5V	19	GND
2	5V	20	CSI4_D3_P
3	1.8V	21	CSI4_D3_N
4	3.3V	22	GND
5	3.3V	23	N/A
6	3.3V	24	N/A
7	GND	25	N/A
8	CSI4_D0_P	26	MIPI4_PWDN
9	CSI4_D0_N	27	CSI4_I2C_SDA
10	GND	28	CSI4_I2C_SCL
11	CSI4_CLK_P	29	GND
12	CSI4_CLK_N	30	N/A
13	GND	31	N/A
14	CSI4_D1_P	32	N/A
15	CSI4_D1_N	33	N/A
16	GND	34	GND
17	CSI4_D2_P	35	CAM4_MCLK
18	CSI4_D2_N	36	GND

3.9 USB 3.1 Gen 1 Type-A Connector #1 , #2, #3

Function	USB 3.1 Gen 1 Type-A connector #1 #2 #3	
Location	J13, J14	
Type Description	Dual-port USB 3.1 Gen 1 Type-A female connector	
Manufacturer and Part Number	Foxconn, UEA1112C-4HK1-4H	
Mating Connector	Any USB 3.1 standard Type-A interface cable or device.	
Pinout	Please refer to USB 3.1 Gen 1 standard.	
Remarks	None	

3.10 Gigabit Ethernet Connector

Function	1Gb single-port Ethernet connector, used to connect to the host system.	
Location	J15, J16	
Type Description	RJ45 with integrated magnetics	
Manufacturer and Part Number	FOXCONN, JFM38013-0L03-4F-BX3	
Mating Connector	Any standard 1Gb Ethernet mating connector can be applicable.	
Pinout	Comply with Ethernet standards.	
Remarks	J15 is via USB3.0 Ethernet controller and J16 is directly from NVIDIA Jetson SOM.	

3.11 Jetson platform/ USB 2.0 Micro B Connector

Function	BSP Installation as recovery mode	
Location	J7	
Type Description	USB micro-type B female connector	
Manufacturer and Part Number	Fullglory, FG-MCB-111440	
Mating Connector	Any USB standard Micro-type interface cable or device.	
Pinout	Please refer to USB Micro-type standard.	
Remarks	None	

3.12 RTC Battery Connector

Function	RTC battery for module	
Location	J6	
Type Description	2.0mm wire-to-board header 02P type	
Manufacturer and Part Number	Pinrex, 721-94-02TWR9	
Mating Connector	Tyu, TU2001HNO-02	
Pinout	Pin # / Description PIN1 / 3V Power PIN2 / GND	
Remarks	RTC Battery: MITSUBISHI, CR2032 3V	

3.13 20-Pin GPIO expansion

Function	General-purpose input/output	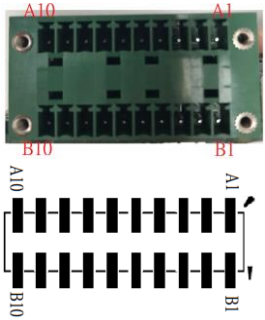
Location	J18	
Type Description	Expansion I/O Connector	
Manufacturer and Part Number	ME252-35020-1	
Mating Connector	20-Pin GPIO expansion	

Pinout

NX215+Orin NX/D115OXB **(Original and now:PCN20220406-2)**

NX215+Orin NANO/D115ONB **(Original and now:PCN20220406-2)**

Address	Pin Name	20-pin Index		Pin Name	Address
	3V3	B1	A1	5V	
	GND	B2	A2	GND	
/dev/i2c-7	I2C1_SDA	B3	A3	UART2_TXD_3V3	/dev/ttyTCU0
	I2C1_SCL	B4	A4	UART2_RXD_3V3	
/dev/i2c-1	I2C0_ID_SDA	B5	A5	GND	
	I2C0_ID_SCL	B6	A6	CANL1	can1 (SPI to CAN)
gpio398 Bidirection	I2S0_SCLK_LS	B7	A7	CANH1	*** Not Supported with PCN20220406-2**
gpio399 Bidirection	I2S0_SDOUT_LS	B8	A8	CANL0	can0 (Native CAN)
gpio400 Bidirection	I2S0_SDIN_LS	B9	A9	CANH0	
gpio401 Bidirection	I2S0_LRCK_LS	B10	A10	N/A	

NX215+NX/NX215B **(now:PCN20220406-2)**

Address	Pin Name	20-Pin Index		Pin Name	Address
	+3V3	B1	A1	+5V	
	GND	B 2	A2	GND	
/dev/i2c-8	I2C1_SDA	B3	A3	UART2_TXD_3V3	/dev/ttyTCU0
	I2C1_SCL	B4	A4	UART2_RXD_3V3	
/dev/i2c-1	I2C0_ID_SDA	B5	A5	GND	
	I2C0_ID_SCL	B6	A6	N/A	
gpio445 Bidirectional	I2S0_SCLK_LS	B7	A7	N/A	
gpio446 Bidirectional	I2S0_SDOUT_LS	B8	A8	CANL0	Can0 (Native CAN)
gpio447 Bidirectional	I2S0_SDIN_LS	B9	A9	CANH0	
gpio448 Bidirectional	I2S0_LRCK_LS	B10	A10	N/A	

NX215+NX/NX215B **(Original)**

Address	Pin Name	40-pin Index		Pin Name	Address
	3V3	B1	A1	5V	
	GND	B2	A2	GND	
/dev/i2c-8	I2C1_SDA	B3	A3	UART2_TXD_3V3	/dev/ttyTCU0
	I2C1_SCL	B4	A4	UART2_RXD_3V3	
/dev/i2c-1	I2C0_ID_SDA	B5	A5	GND	
	I2C0_ID_SCL	B6	A6	CANL1	can1 (SPI to CAN)
gpio445 Bidirection	I2S0_SCLK_LS	B7	A7	CANH1	
gpio446 Bidirection	I2S0_SDOUT_LS	B8	A8	CANL0	can0 (Native CAN)
gpio447 Bidirection	I2S0_SDIN_LS	B9	A9	CANH0	
gpio448 Bidirection	I2S0_LRCK_LS	B10	A10	N/A	

NX215+TX2 NX/TN115B **(now: PCN20220406-2)**

Address	Pin Name	20-Pin Index		Pin Name	Address
	+3V3	B1	A1	+5V	
	GND	B 2	A2	GND	
/dev/i2c-8	I2C1_SDA	B3	A3	UART2_TXD_3V3	/dev/ttyTCU0
	I2C1_SCL	B4	A4	UART2_RXD_3V3	
/dev/i2c-1	I2C0_ID_SDA	B5	A5	GND	
	I2C0_ID_SCL	B6	A6	N/A	
gpio445 Bidirectional	I2S0_SCLK_LS	B7	A7	N/A	
gpio446 Bidirectional	I2S0_SDOUT_LS	B8	A8	CANL0	Can0 (Native CAN)
gpio447 Bidirectional	I2S0_SDIN_LS	B9	A9	CANH0	
gpio448 Bidirectional	I2S0_LRCK_LS	B10	A10	N/A	

NX215+TX2 NX/TN115B **(Original)**

Address	Pin Name	40-pin Index		Pin Name	Address
	3V3	B1	A1	5V	
	GND	B2	A2	GND	
/dev/i2c-1	I2C1_SDA	B3	A3	UART2_TXD_3V3	/dev/ttyS0
	I2C1_SCL	B4	A4	UART2_RXD_3V3	
/dev/i2c-0	I2C0_ID_SDA	B5	A5	GND	
	I2C0_ID_SCL	B6	A6	CANL1	can1 (SPI to CAN)
gpio392 Bidirection	I2S0_SCLK_LS	B7	A7	CANH1	
gpio393 Bidirection	I2S0_SDOUT_LS	B8	A8	CANL0	can0 (Native CAN)
gpio394 Bidirection	I2S0_SDIN_LS	B9	A9	CANH0	
gpio395 Bidirection	I2S0_LRCK_LS	B10	A10	N/A	

NX215+NANO/ NO115B **(now:PCN20220406-2)**

Address	Pin Name	20-Pin Index		Pin Name	Address
	+3V3	B1	A1	+5V	
	GND	B 2	A2	GND	
/dev/i2c-8	I2C1_SDA	B3	A3	UART2_TXD_3V3	/dev/ttyTCU0
	I2C1_SCL	B4	A4	UART2_RXD_3V3	
/dev/i2c-1	I2C0_ID_SDA	B5	A5	GND	
	I2C0_ID_SCL	B6	A6	N/A	
gpio445 Bidirectional	I2S0_SCLK_LS	B7	A7	N/A	
gpio446 Bidirectional	I2S0_SDOUT_LS	B8	A8	N/A	
gpio447 Bidirectional	I2S0_SDIN_LS	B9	A9	N/A	
gpio448 Bidirectional	I2S0_LRCK_LS	B10	A10	N/A	

NX215+NANO/ NO115B **(Original)**

Address	Pin Name	40-pin Index		Pin Name	Address
	3V3	B1	A1	5V	
	GND	B2	A2	GND	
/dev/i2c-1	I2C1_SDA	B3	A3	UART2_TXD_3V3	/dev/ttyS0
	I2C1_SCL	B4	A4	UART2_RXD_3V3	
/dev/i2c-0	I2C0_ID_SDA	B5	A5	GND	
	I2C0_ID_SCL	B6	A6	CANL1	can1 (SPI to CAN)
gpio79 Bidirection	I2S0_SCLK_LS	B7	A7	CANH1	
gpio78 Bidirection	I2S0_SDOUT_LS	B8	A8	N/A	
gpio77 Bidirection	I2S0_SDIN_LS	B9	A9	N/A	
gpio76 Bidirection	I2S0_LRCK_LS	B10	A10	N/A	

Remarks	GPIO uses 3.3V

3.14 Optional Function Selection

Function	Fan PWM controller/Auto Power on	
Location	SW2	
Type Description	4 SPST DIP switch	
Manufacturer and Part Number	DIPTRONICS IN OFF-SWITCHING 0.025A/24VDC	
Pinout	**(PCN20220406-2)** **(original)**	
Remark	Default SW2 OFF	

(PCN20220406-2)

Position No.	Position Description	Switch ON	Switch OFF
1	N/A	N/A	N/A
2	CAN0_Terminal	With 120 ohm terminal	w/o 120 ohm (Ctrl) nal
3	Power-Up / Start-up Control	"ATX Mode" Power Button Press Required	"AT Mode" Automatic Start-up Enabled
4	PWM Fan Control	FAN Always ON	FAN PWM Enabled

(original)

Position No.	Position Description	Switch ON	Switch OFF
1	CAN1_Terminal	With 120 ohm terminal	w/o 120 ohm terminal
2	CAN0_Terminal	With 120 ohm terminal	w/o 120 ohm terminal
3	Power-Up / Start-up Control	"ATX Mode" Power Button Press Required	"AT Mode" Automatic Start-up Enabled
4	PWM Fan Control	FAN Always ON	FAN PWM Enabled

3.15 Power Button

Function	Power button	
Location	SW3	
Type Description	Button	
Manufacturer and Part Number	N/A	
Pinout	N/A	
Remark	None	

3.16 Recover Button

Function	Recovery button	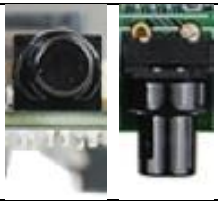
Location	SW4	
Type Description	Button	
Manufacturer and Part Number	N/A	
Pinout	N/A	
Remark	None	

Other Switches and Jumpers

Other switches and jumpers listed on the boards but not mentioned in this manual are reserved for the internal use by AVerMedia. They are not open to the client application.

4.0 Installation

1. Check and ensure all the external system power supplies are turned off.
2. Install the Micro USB2.0 cable to Jetson platform connector.
3. Press and hold on the Recover button.
4. Connect the power cord to the box PC.

4.1 BSP Setup Instructions

BSP (board support package) file: NO115B-R*.*.*.tar.gz for NO115B
BSP (board support package) file: TN115B-R*.*.*.tar.gz for TN115B
BSP (board support package) file: NX215B-R*.*.*.tar.gz for NX215B
BSP (board support package) file: D115OX-R*.*.*.tar.gz for D115OXB
BSP (board support package) file: D115ON-R*.*.*.tar.gz for D115ONB

If you want to get the BSP download link, Please contact with AVerMedia FAE.

Default login username/password of the BSP is nvidia/nvidia

If you have difficulties to access the BSP download link, please visit AVerMedia website at https://www.avermedia.com/professional/download, or contact technical support at https://www.avermedia.com/professional/technical_support or e-mail us at eusupport@avermedia.com for further assistance.

BSP Installation steps for NVIDIA Jetson board: (Important Note: Please backup your personal files before re-flashing BSP)
After you download the BSP file and put the file in a Linux PC, please refer to the steps below to re-flash BSP.

1. Let the JETSON Nano/TX2 NX/Xavier NX/Orin NX/Orin Nano initiate recovery mode.

You have to keep pressing “Recovery” button and then power on the NVIDIA Jetson board to initiate recovery mode.
When connecting a NVIDIA Jetson board to a Linux PC via a MicroUSB to USB cable, you can check kernel messages with `dmesg` command in the Linux PC.
Once you see these similar messages in the kernel messages, this means that the NVIDIA Jetson board is in the recovery mode.

[24685.229129] usb 1-7: Product: APX
[24685.229132] usb 1-7: Manufacturer: NVIDIA Corp

2. Using the commands below in the Linux PC to start re-flashing BSP.

$ sudo tar zxvf <BSP_tarball_filename>.tar.gz
# where <BSP_tarball_filename> is the BSP tarball file name for your target device.
$ cd JetPack_xxx/Linux_for_Tegra
$ ./install.sh

Note: sudo is required to extract the BSP.

3. About how to Flash BSP for Orin Nano/NX, please refer to following link for more instructions.

https://www.avermedia.com/professional/support/faq/how-to-flash-bsp-for-orin-nano-nx

5.0 Software

This section describes BSP's features for NX215B/TN115B/NO115B/D115OXB/D115ONB

1. Support optional M.2 WI-FI/Bluetooth modules (Intel® Wireless-AC 9260), the manager UI of AC9260 WiFi/Bluetooth is located on the upper-right corner of Ubuntu desktop. It can be also controlled by nmcli/hcitool in command line.
   * This feature is not supported on NO115B

2. Power Mode
   Power mode can be modified by the UI on the upper-right corner of Ubuntu or the following commands.

```
# get current power mode
$ sudo nvpmodel -q
# setup power mode
# where <x> is power mode number, please refer to (<= r32.7.x)
https://docs.nvidia.com/jetson/archives/l4t-archived/l4t-3261/index.html#page/Tegra%20Linux%20Driver%20Package%20Development%20Guide/power_management_jetson_xavier.html# and
(>= r35.1)
https://docs.nvidia.com/jetson/archives/r35.1/DeveloperGuide/text/SD/PlatformPowerAndPerformance/JetsonOrinNxSeriesAndJetsonAgxOrinSeries.html?highlight=nvpmodel#sup
```

```
ported-modes-and-power-efficiency for more information
$ sudo nvpmodel -m <x>
```

* Current default power mode:

NX215B: MODE 10W DESKTOP (5)

TN115B: MAXP CORE AEM (3)

NO115B: MAXN (0)

D115OX 16G/8G: 15W (2)

D115ON 8G: 15W (0)

D115ON 4G: 10W (0)

3. RTC Battery
   The following command can get RTC battery voltage.

```
$ sudo avt_tool -a | grep -oP "AIN5.*\[\K[^\]]*"
```

4. Fan Speed (<= JetPack 4.6.x)
   The following commands can get PWM fan information.

```
# get current speed setting of PWM Fan (0 ~ 255)
$ cat /sys/devices/pwm-fan/cur_pwm

# get Fan RPM value
$ sudo bash -c "echo 1 > /sys/devices/pwm-fan/tach_enable"
$ cat /sys/devices/pwm-fan/rpm_measured
```

5. Fan Speed (>= JetPack 5.0)
   The following commands can get PWM fan information.

```
# get current speed setting of PWM Fan (0 ~ 255)
$ cat /sys/devices/platform/pwm-fan/hwmon/hwmon<x>/pwm1

# get Fan RPM value
$ cat /sys/devices/platform/39c0000.tachometer/hwmon/hwmon<y>/rpm
```

* Where <x> and <y> are dynamic hwmon indexes

6. CAN Bus

(PCN20220406-2)

There are one CAN Bus for NX215B/TN115B/D115OXB/D115ONB, see the following command for usage.

(1) Enable and setup CAN Bus

```
# 1. Enable CAN Bus
$ sudo modprobe can
$ sudo modprobe can-raw
$ sudo modprobe mttcan
# 2. Setup CAN Bus
$ sudo ip link set can0 type can bitrate 500000 dbitrate 2000000 berr-reporting on fd on restart-ms 100
$ sudo ip link set can0 up
```

(2) Receive and Send

```
# Receive
$ candump can0

# Send
$ cansend can0 <can_frame>
```

* where:

<can_frame> is CAN Bus frame message, see `cansend --help` for more detail.

(Original)

There are two CAN Bus available for NX215B/TN115B/D115OXB/D115ONB (CAN0/CAN1), and only one CAN Bus available on NO115B (CAN1), see the following command for usage.

(1) Enable and setup CAN0

```
# 1. Enable CAN0
$ sudo modprobe can
$ sudo modprobe can-raw
$ sudo modprobe mttcan
# 2. Setup CAN0
$ sudo ip link set can0 type can bitrate 500000 dbitrate 2000000 berr-reporting on fd on restart-ms 100
$ sudo ip link set can0 up
```

(2) Setup CAN1 (CAN1 is enabled by default)

```
# CAN1 (interface name: can1)
# 1. Setup CAN1
$ sudo ip link set can1 type can bitrate 500000 restart-ms 100
$ sudo ip link set can1 up
```

(3) Receive and Send

```
# Receive
$ candump <interface>

# Send
$ cansend <interface> <can_frame>
```

* where:

<interface> is the interface name of CAN Bus, e.g. can0 or can1

<can_frame> is CAN Bus frame message, see `cansend --help` for more detail.

7. MIPI CSI Camera

There are 2x 2-lane and 1x 4-lane MIPI CSI camera supported on NX215B/TN115B/NO115B, for current supported products type are listing as below:

* Note: D115OX/D115ON only supports 2 lane camera

(1) IMX219 (2-lane)
(2) IMX477 (2-lane) - only supported on NX215B currently
(3) IMX179 (2-lane)
(4) IMX290 (2-lane)
(5) IMX290ISP (2-lane)
(6) IMX334 (4-lane)
(7) IMX334THCV (4-lane)

Test Command:

> Raspberry pi v2 :

No	width	height	framerate
0	3264	2464	21
1	3264	1848	28
2	1920	1080	30
3	1640	1232	30
4	1280	720	60

```
$ gst-launch-1.0 nvarguscamerasrc sensor-id=0 sensor-mode=0 !
'video/x-raw(memory:NVMM), width=(int)3264, height=(int)2464,
format=(string)NV12, framerate=(fraction)21/1' ! nvvidconv ! xvimagesink -e
$ gst-launch-1.0 nvarguscamerasrc sensor-id=0 sensor-mode=1 !
'video/x-raw(memory:NVMM), width=(int)3264, height=(int)1848,
format=(string)NV12, framerate=(fraction)28/1' ! nvvidconv ! xvimagesink -e
$ gst-launch-1.0 nvarguscamerasrc sensor-id=0 sensor-mode=2 !
'video/x-raw(memory:NVMM), width=(int)1920, height=(int)1080,
format=(string)NV12, framerate=(fraction)30/1' ! nvvidconv ! xvimagesink -e
$ gst-launch-1.0 nvarguscamerasrc sensor-id=0 sensor-mode=3 !
'video/x-raw(memory:NVMM), width=(int)1640, height=(int)1232,
format=(string)NV12, framerate=(fraction)30/1' ! nvvidconv ! xvimagesink -e
$ gst-launch-1.0 nvarguscamerasrc sensor-id=0 sensor-mode=4 !
'video/x-raw(memory:NVMM), width=(int)1280, height=(int)720,
format=(string)NV12, framerate=(fraction)60/1' ! nvvidconv ! xvimagesink -e
```

Multiple:

```
$ gst-launch-1.0 nvarguscamerasrc sensor-id=0 sensor-mode=0 !
'video/x-raw(memory:NVMM), width=(int)3264, height=(int)2464,
format=(string)NV12, framerate=(fraction)21/1' ! nvvidconv ! xvimagesink -e &
gst-launch-1.0 nvarguscamerasrc sensor-id=1 sensor-mode=0 !
'video/x-raw(memory:NVMM), width=(int)3264, height=(int)2464,
format=(string)NV12, framerate=(fraction)21/1' ! nvvidconv ! xvimagesink -e &
```

> Raspberry pi v3 (imx477):

No	width	height	framerate
0	3840	2160	30
1	1920	1080	60

$ gst-launch-1.0 nvarguscamerasrc sensor-id=0 ! "video/x-raw(memory:NVMM),width=3840,height=2160,framerate=30/1" ! nvvidconv ! queue ! xvimagesink -e

$ gst-launch-1.0 nvarguscamerasrc sensor-id=0 ! "video/x-raw(memory:NVMM),width=1920,height=1080,framerate=60/1" ! nvvidconv ! queue ! xvimagesink -e

Multiple:

$ gst-launch-1.0 nvarguscamerasrc sensor-id=0 ! "video/x-raw(memory:NVMM),width=1920,height=1080,framerate=60/1" ! nvvidconv ! queue ! xvimagesink -e & gst-launch-1.0 nvarguscamerasrc sensor-id=1 ! "video/x-raw(memory:NVMM),width=1920,height=1080,framerate=60/1" ! Nvvidconv ! queue ! xvimagesink -e &

> IMX179 :

No	width	height	framerate
0	3280	2464	15
1	1920	1080	30
2	3280	1698	30
3	2096	1084	30
4	1640	1232	30
5	820	616	30
6	820	616	60

$ gst-launch-1.0 nvarguscamerasrc sensor-id=0 sensor-mode=0 ! 'video/x-raw(memory:NVMM), width=(int)3280, height=(int)2464, format=(string)NV12, framerate=(fraction)15/1' ! nvvidconv ! xvimagesink -e

$ gst-launch-1.0 nvarguscamerasrc sensor-id=0 sensor-mode=1 ! 'video/x-raw(memory:NVMM), width=(int)1920, height=(int)1080, format=(string)NV12, framerate=(fraction)30/1' ! nvvidconv ! xvimagesink -e

$ gst-launch-1.0 nvarguscamerasrc sensor-id=0 sensor-mode=2 ! 'video/x-raw(memory:NVMM), width=(int)3280, height=(int)1698, format=(string)NV12, framerate=(fraction)30/1' ! nvvidconv ! xvimagesink -e

$ gst-launch-1.0 nvarguscamerasrc sensor-id=0 sensor-mode=3 ! 'video/x-raw(memory:NVMM), width=(int)2096, height=(int)1084, format=(string)NV12, framerate=(fraction)30/1' ! nvvidconv ! xvimagesink -e

$ gst-launch-1.0 nvarguscamerasrc sensor-id=0 sensor-mode=4 ! 'video/x-raw(memory:NVMM), width=(int)1640, height=(int)1232, format=(string)NV12, framerate=(fraction)30/1' ! nvvidconv ! xvimagesink -e

$ gst-launch-1.0 nvarguscamerasrc sensor-id=0 sensor-mode=5 ! 'video/x-raw(memory:NVMM), width=(int)820, height=(int)616, format=(string)NV12, framerate=(fraction)30/1' ! nvvidconv ! xvimagesink -e

$ gst-launch-1.0 nvarguscamerasrc sensor-id=0 sensor-mode=6 !

'video/x-raw(memory:NVMM), width=(int)820, height=(int)616, format=(string)NV12, framerate=(fraction)60/1' ! nvvidconv ! xvimagesink -e

Control Focus:

$ v4l2-ctl -d /dev/video2 --set-ctrl=focus_manual=1

$ v4l2-ctl -d /dev/video2 --set-ctrl=focus_manual=1024

> IMX290 :

No	width	height	framerate
0	1948	1096	30
1	1948	1096	60

$ gst-launch-1.0 nvarguscamerasrc sensor-id=0 sensor-mode=0 ! 'video/x-raw(memory:NVMM), width=(int)1948, height=(int)1096, format=(string)NV12, framerate=(fraction)30/1' ! nvvidconv ! xvimagesink -e

$ gst-launch-1.0 nvarguscamerasrc sensor-id=0 sensor-mode=1 ! 'video/x-raw(memory:NVMM), width=(int)1948, height=(int)1096, format=(string)NV12, framerate=(fraction)60/1' ! nvvidconv ! xvimagesink -e

> IMX290ISP :

No	width	height	framerate
0	1920	1080	25/30/50/60
1	1280	960	25/30/50/60
2	1280	720	25/30/50/60
0	800	600	25/30/50/60
1	640	480	25/30/50/60
2	640	360	25/30/50/60

$ gst-launch-1.0 v4l2src io-mode=4 device=/dev/video0 do-timestamp=true ! 'video/x-raw, width=1920, height=1080, framerate=30/1, format=UYVY' ! xvimagesink sync=false

$ gst-launch-1.0 v4l2src io-mode=4 device=/dev/video0 do-timestamp=true ! 'video/x-raw, width=1280, height=720, framerate=30/1, format=UYVY' ! xvimagesink sync=false

$ gst-launch-1.0 v4l2src io-mode=4 device=/dev/video0 do-timestamp=true ! 'video/x-raw, width=1280, height=960, framerate=30/1, format=UYVY' ! xvimagesink sync=false

$ gst-launch-1.0 v4l2src io-mode=4 device=/dev/video0 do-timestamp=true ! 'video/x-raw, width=1920, height=1080, framerate=60/1, format=UYVY' ! xvimagesink sync=false

$ gst-launch-1.0 v4l2src io-mode=4 device=/dev/video0 do-timestamp=true ! 'video/x-raw, width=1280, height=720, framerate=60/1, format=UYVY' ! xvimagesink sync=false

$ gst-launch-1.0 v4l2src io-mode=4 device=/dev/video0 do-timestamp=true ! 'video/x-raw, width=1280, height=960, framerate=60/1, format=UYVY' ! xvimagesink sync=false

> IMX334 :

```
No   width   height  framerate
0  3864    2180      30
1  3864    2180      60
2  1944    1090      30
3  1944    1090      60

$ gst-launch-1.0 nvarguscamerasrc sensor-id=0 sensor-mode=0 !
'video/x-raw(memory:NVMM), width=(int)3864, height=(int)2180,
format=(string)NV12, framerate=(fraction)30/1' ! nvvidconv ! xvimagesink -e
$ gst-launch-1.0 nvarguscamerasrc sensor-id=0 sensor-mode=1 !
'video/x-raw(memory:NVMM), width=(int)3864, height=(int)2180,
format=(string)NV12, framerate=(fraction)60/1' ! nvvidconv ! xvimagesink -e
$ gst-launch-1.0 nvarguscamerasrc sensor-id=0 sensor-mode=2 !
'video/x-raw(memory:NVMM), width=(int)1944, height=(int)1090,
format=(string)NV12, framerate=(fraction)30/1' ! nvvidconv   top=5 bottom=1085
left=12 right=1932 ! xvimagesink -e
$ gst-launch-1.0 nvarguscamerasrc sensor-id=0 sensor-mode=3 !
'video/x-raw(memory:NVMM), width=(int)1944, height=(int)1090,
format=(string)NV12, framerate=(fraction)60/1' ! nvvidconv   top=5 bottom=1085
left=12 right=1932 ! xvimagesink -e

> IMX334 V-by-One (imx334thcv):
No   width   height  framerate
0  3864    2180      30
1  1944    1090      30
2  1944    1090      60

$ gst-launch-1.0 nvarguscamerasrc sensor-id=0 sensor-mode=0 !
'video/x-raw(memory:NVMM), width=(int)3864, height=(int)2180,
format=(string)NV12, framerate=(fraction)30/1' ! nvvidconv ! xvimagesink -e
$ gst-launch-1.0 nvarguscamerasrc sensor-id=0 sensor-mode=1 !
'video/x-raw(memory:NVMM), width=(int)1944, height=(int)1090,
format=(string)NV12, framerate=(fraction)30/1' ! nvvidconv   top=5 bottom=1085
left=12 right=1932 ! xvimagesink -e
$ gst-launch-1.0 nvarguscamerasrc sensor-id=0 sensor-mode=2 !
'video/x-raw(memory:NVMM), width=(int)1944, height=(int)1090,
format=(string)NV12, framerate=(fraction)60/1' ! nvvidconv   top=5 bottom=1085
left=12 right=1932 ! xvimagesink -e
```

8. GPIO usage (<= JetPack 4.6.x)

(1) Output: (e.g. gpio232)

```
$ sudo su
$ gpio_id=232
$ echo $gpio_id > /sys/class/gpio/export
$ echo out > /sys/class/gpio/gpio$gpio_id/direction
$ echo 1 > /sys/class/gpio/gpio$gpio_id/value     # HIGH
```

```
$ echo 0 > /sys/class/gpio/gpio$gpio_id/value     # LOW
```

(2) Input

```
$ sudo su
$ gpio_id=232
$ echo $gpio_id > /sys/class/gpio/export
$ echo in > /sys/class/gpio/gpio$gpio_id/direction
$ cat /sys/class/gpio/gpio$gpio_id/value        # 1: HIGH,   0: LOW
```

(3) Disable

```
$ sudo su
$ gpio_id=232
$ echo $gpio_id >/sys/class/gpio/unexport
```

9. GPIO usage (>= JetPack 5.0)

(1) Output

```
$ sudo su
$ gpio_id=483
$ echo $gpio_id > /sys/class/gpio/export
$ cat /sys/kerne/debug/gpio | grep 483
gpio-483 (PZ.05                    )

$ gpio_index=PZ.05
$ echo out > /sys/class/gpio/$gpio_index/direction
$ echo 1 > /sys/class/gpio/$gpio_index /value     # HIGH
$ echo 0 > /sys/class/gpio/$gpio_index /value     # LOW
```

(2) Input

```
$ sudo su
$ gpio_id=483
$ echo $gpio_id > /sys/class/gpio/export
$ cat /sys/kerne/debug/gpio | grep 483
gpio-483 (PZ.05                    )

$ gpio_index=PZ.05
$ echo in > /sys/class/gpio/$gpio_index /direction
$ cat /sys/class/gpio/$gpio_index /value        # 1: HIGH,   0: LOW
```

(3) Disable

```
$ sudo su
```

```
$ gpio_id=483
$ echo $gpio_id >/sys/class/gpio/unexport
```

For L4T (Linux for Tegra) BSP support and the other software support associated with NVIDIA® Jetson Nano / TX2 NX/ Xavier NX/Orin NX/Orin Nano , please visit AVerMedia website to contact our technical support function.
(https://www.avermedia.com/tw/support/contact)

6.0 Force Recovery Mode

USB 3.l/ Jetson platform port of NX215/NO115B/TN115B/NX215B/D115OXB/D115ONB can be used to re-program NVIDIA® Jetson NANO/TX2 NX/Xavier NX/Orin NX/Orin Nano by using the other host system running NVIDIA Jetpack, as the procedure described below.

1. Power off the system. Ensure the system power must be completely OFF, instead of staying in the suspend mode or the sleep mode.

2. Connect a USB cable from Jetson platform USB port to the other host system which will be used to re-program the new system file into NVIDIA® Jetson NANO/TX2 NX/Xavier NX/Orin NX/Orin Nano

3. Press and hold down Force Recovery Button and then power on the carrier board.

4. After three seconds, release Force Recovery Button.

5. NVIDIA® NANO/TX2 NX/Xavier NX/Orin NX/Orin Nano will show up on the USB list of the host system as a new NVIDIA target device.

After the system software is updated successfully, please ensure to power off the system. A clean power-on will then revert Jetson platform port back to the host mode.

7.0 Power Consumption

Item Description	Power Consumption
Theoretical Maximum System Power Consumption	● NO115B Power Consumption: 3.5W to 18.5W ● TN115B Power Consumption: 3.5W to 23.5W ● NX215B Power Consumption: 3.5W to 28.5W ● D115ONB Power Consumption: 3.5W to 23.5W ● D115OXB Power Consumption: 3.5W to 33.5W The condition is connected to USB3.0*2,USB*1,MIPI *2, LAN *2, SSD 256G*1,Wifi 9260*1, HDMI*1,SD Card*1 with CPU/ GPU full loading. (maximum power consumption up to 60W based on adapter)
Typical System Power Consumption	The power consumption under the normal operating mode is depending on the application software running with NVIDIA® Jetson Nano/ TX2 NX/Xavier NX/Orin Nano/Orin NX/Orin Nano.

8.0 Accessory Drawings

8.1 Fan Module/ Adapter/ Power Cord

Fan Module for NANO

- Rated Voltage: 5V
- Operating Voltage Range: 4V~5.5V
- Rated Speed: 6000RPM±10%
  (Testing Speed After Continuous 3 Minute Operation At Ambient Temperature Of 25 ℃)
- Life Expectancy: 70,000hours at 40℃ (WITH 15~65% RH)
- Bearing Type: Two Ball

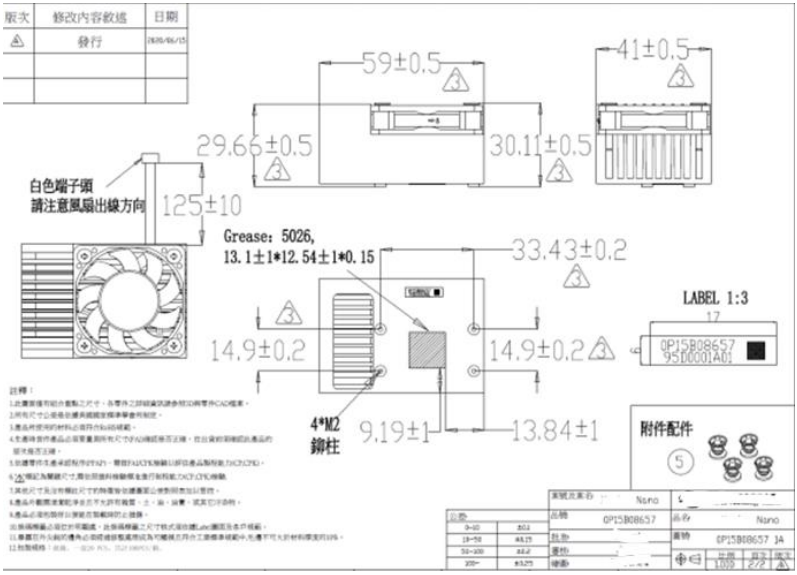

Fan Module for NX

- Rated Voltage: 5V
- Operating Voltage Range: 4V~5.5V
- Rated Speed: 6000RPM±10%
  (Testing Speed After Continuous 3 Minute Operation At Ambient Temperature Of 25 ℃)
- Life Expectancy: 70,000hours at 40℃ (WITH 15~65% RH)
- Bearing Type: Two Ball

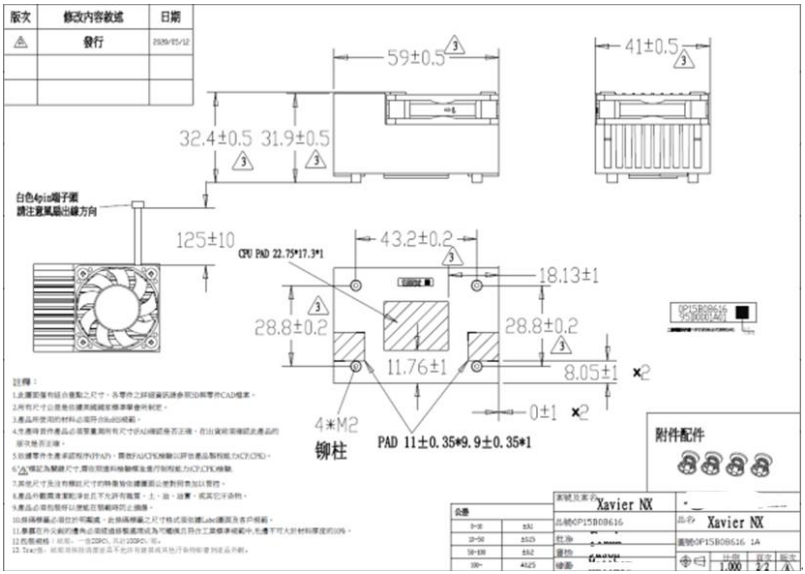

Fan Module for TX2 NX

- Rated Voltage: 5V
- Operating Voltage Range: 4V~5.5V
- Rated Speed: 6000RPM±10%
  (Testing Speed After Continuous 3 Minute Operation At Ambient Temperature Of 25 ℃)
- Life Expectancy: 70,000hours at 40℃ (WITH 15~65% RH)
- Bearing Type: Two Ball

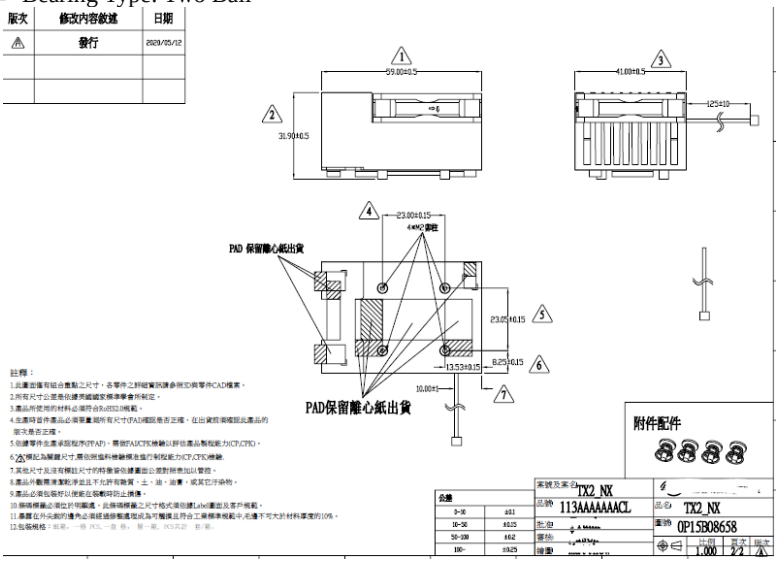

Fan Module for Orin NX/Orin Nano

- Rated Voltage: 5V
- Operating Voltage Range: 3.5V~5.5V
- Rated Speed: 7000RPM±10%
  (Testing Speed After Continuous 3 Minute Operation At Ambient Temperature Of 25℃)
- Life Expectancy: 70,000hours at 40°C (WITH 15~65% RH)
- Bearing Type: Two Ball

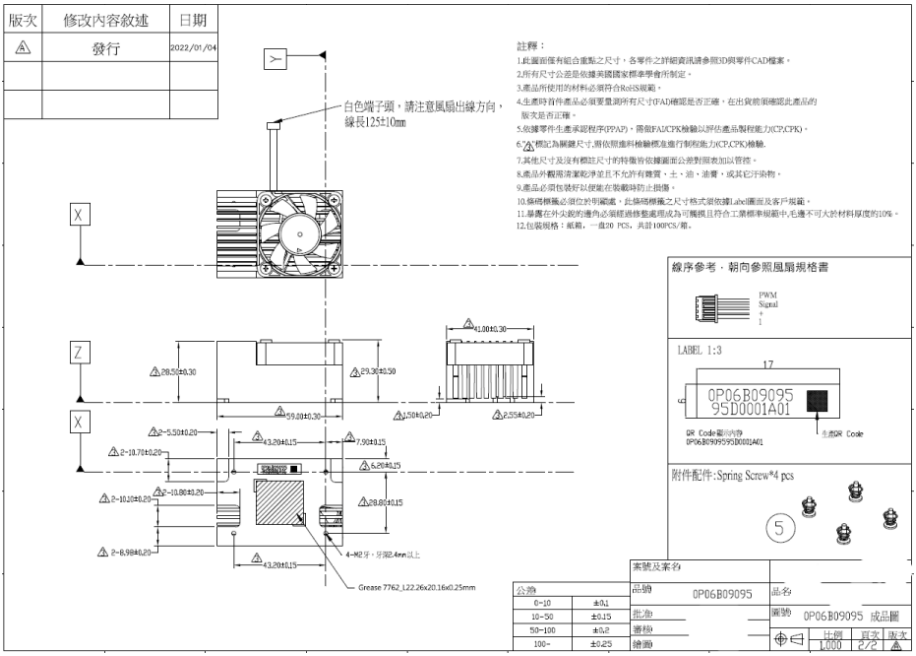

Power Adapter 04131HGOUANK

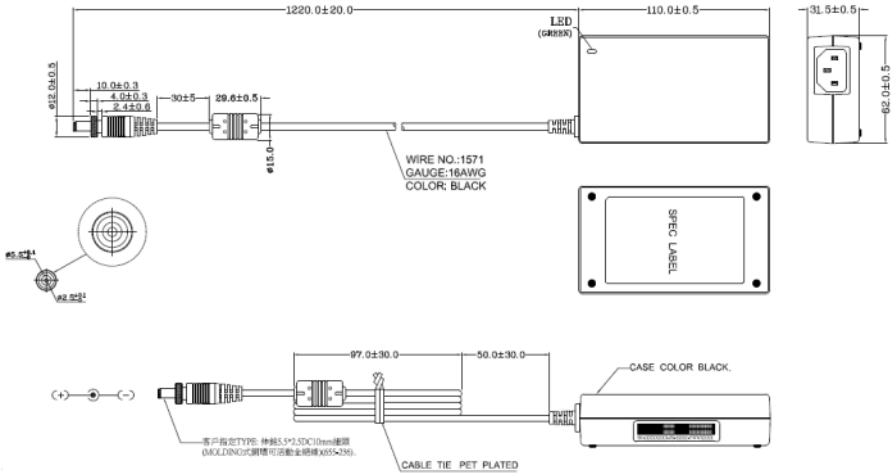

64APOWERBRX-IPD (TW version)

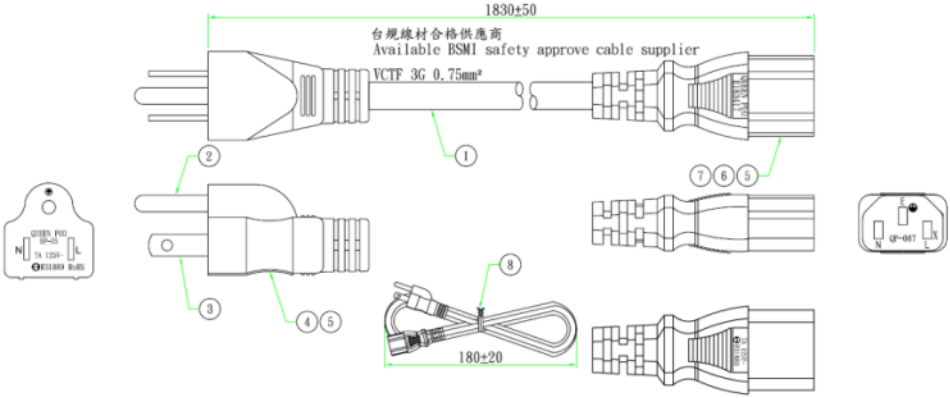

064APOWERBR2-IPD (US version)

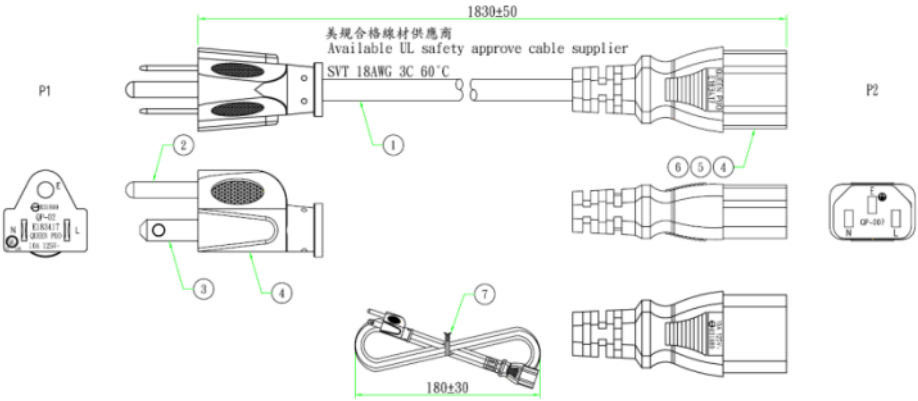

064APOWERBRW-IPD (UK version)

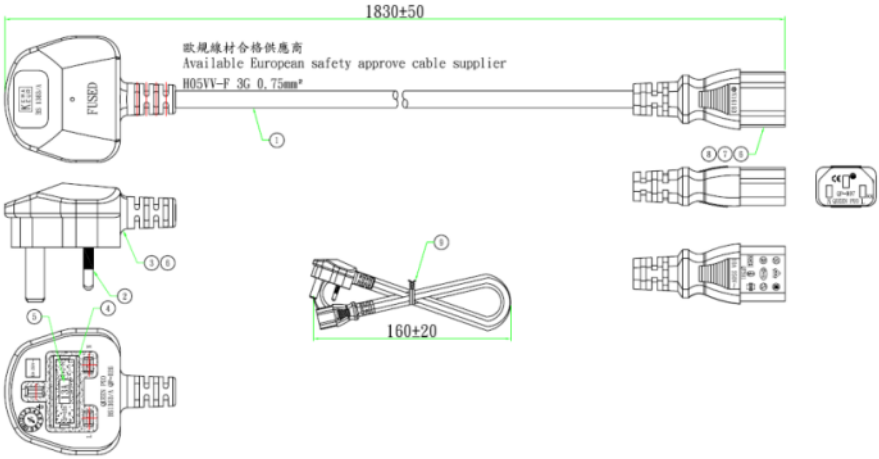

064APOWERBR5-IPD (EU version)

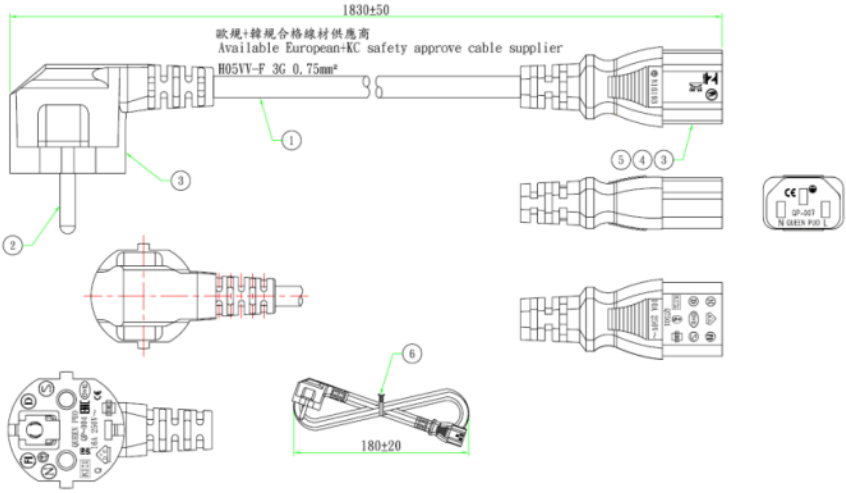

064APOWERBSL (JP version)

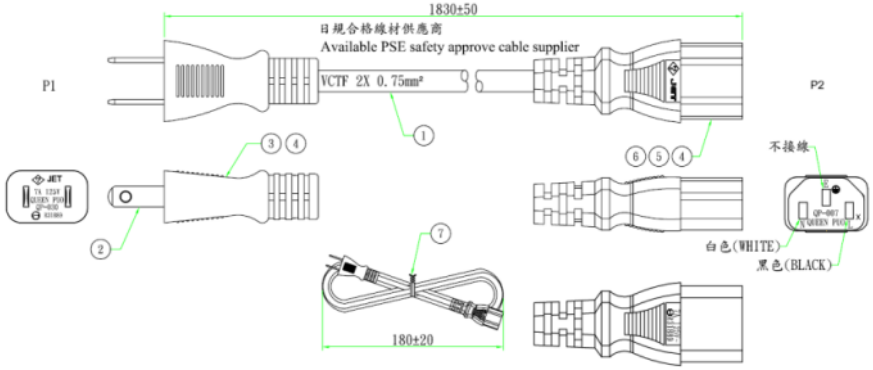

064APOWERBR4-IPD (CN version)

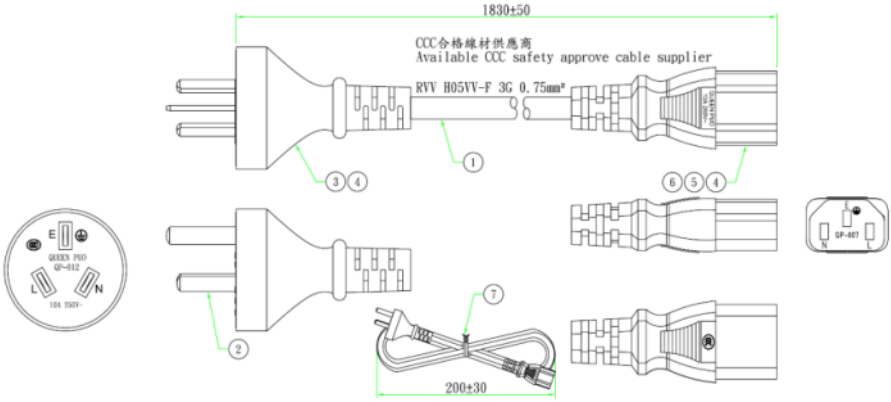

8.2 Dimension Drawings and Assembly Drawings

8.2.1 Dimension Drawings of carrier board

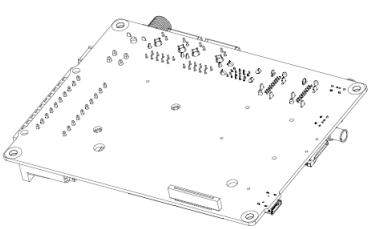

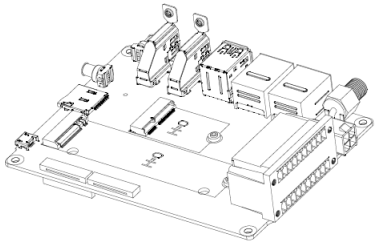

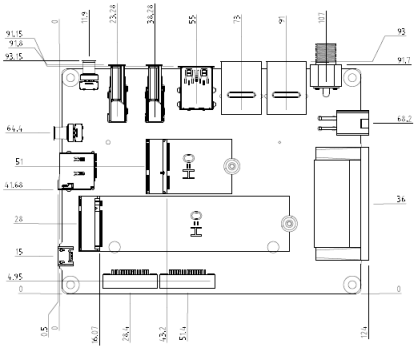

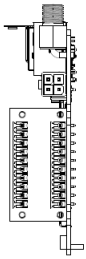

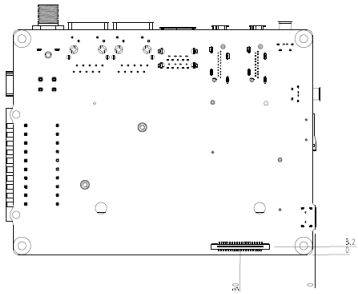

8.2.2 Dimension Drawing of NO115B/ TN115B/ NX215B/D115OXB/D115ONB Box PC

(PCN20230609-1 & PCN 20230627)

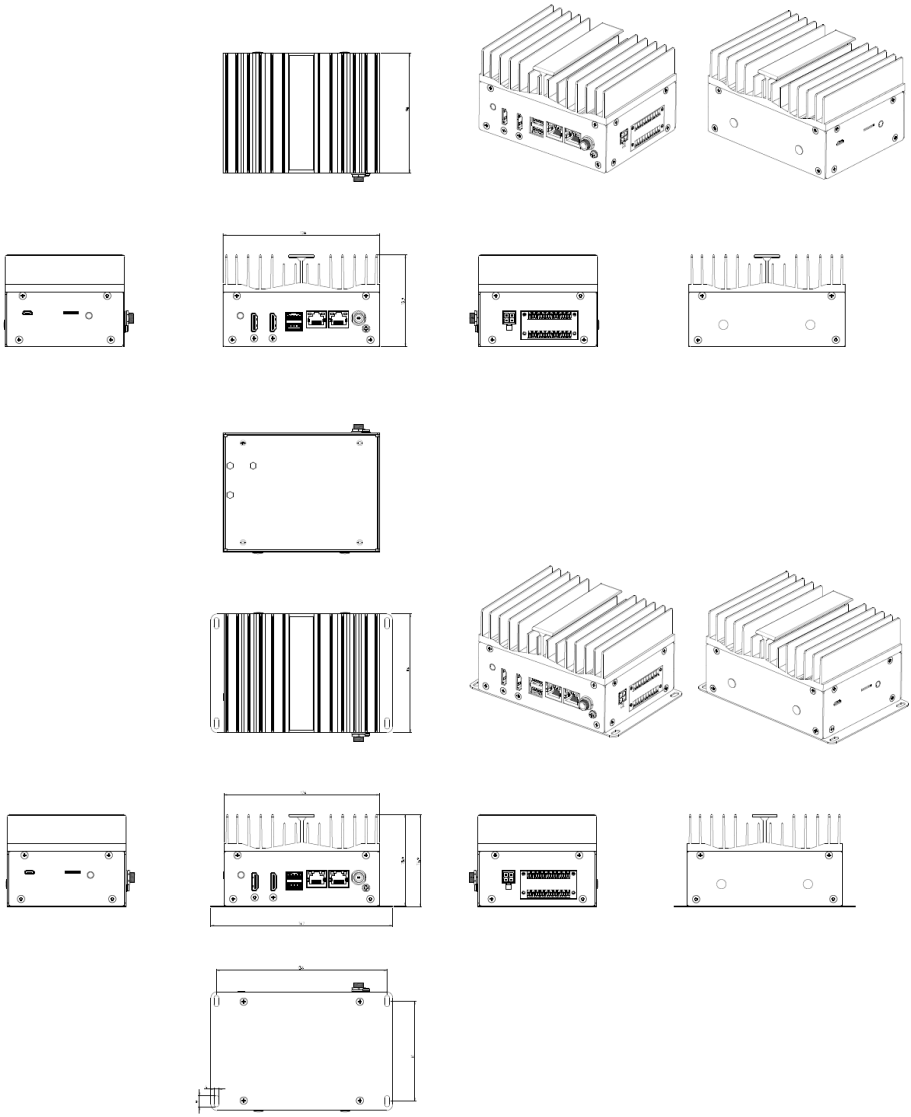

(Original)

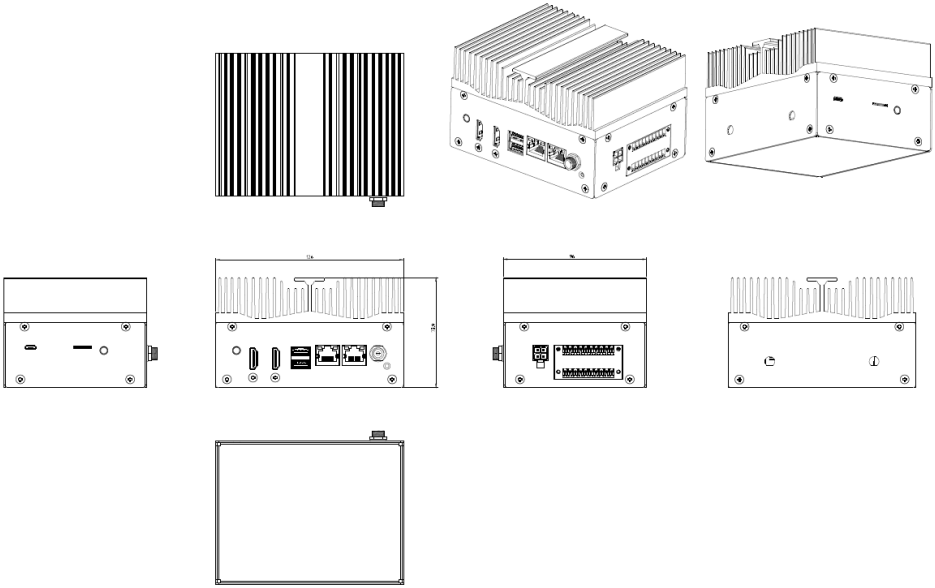

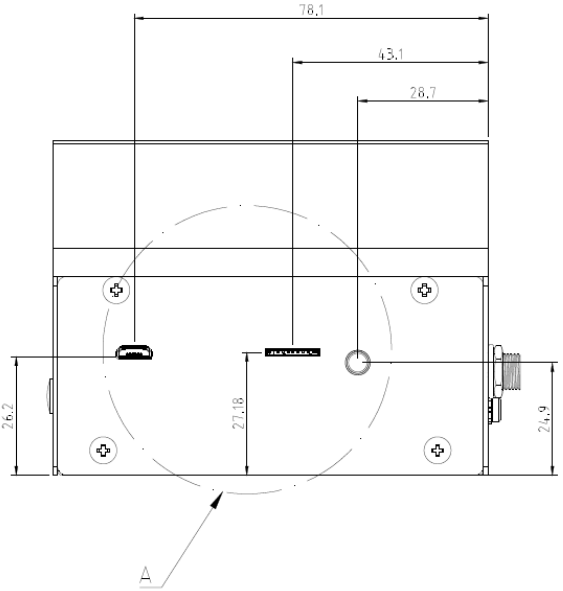
78.1
43.1
28.7
26.2
27.18
24.9
A

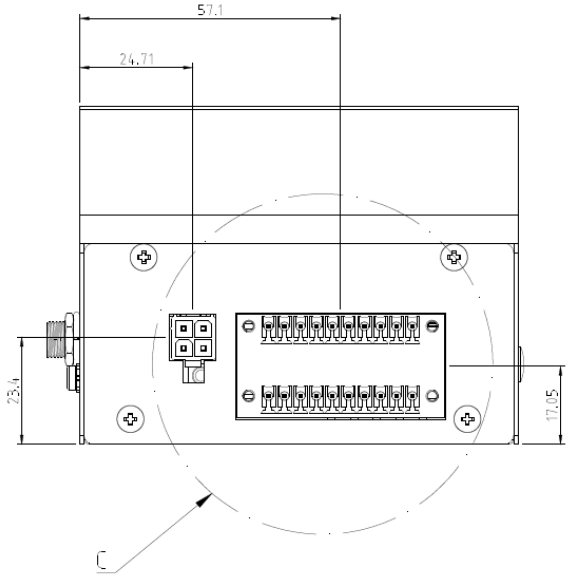
57.1
24.71
23.4
17.05
C

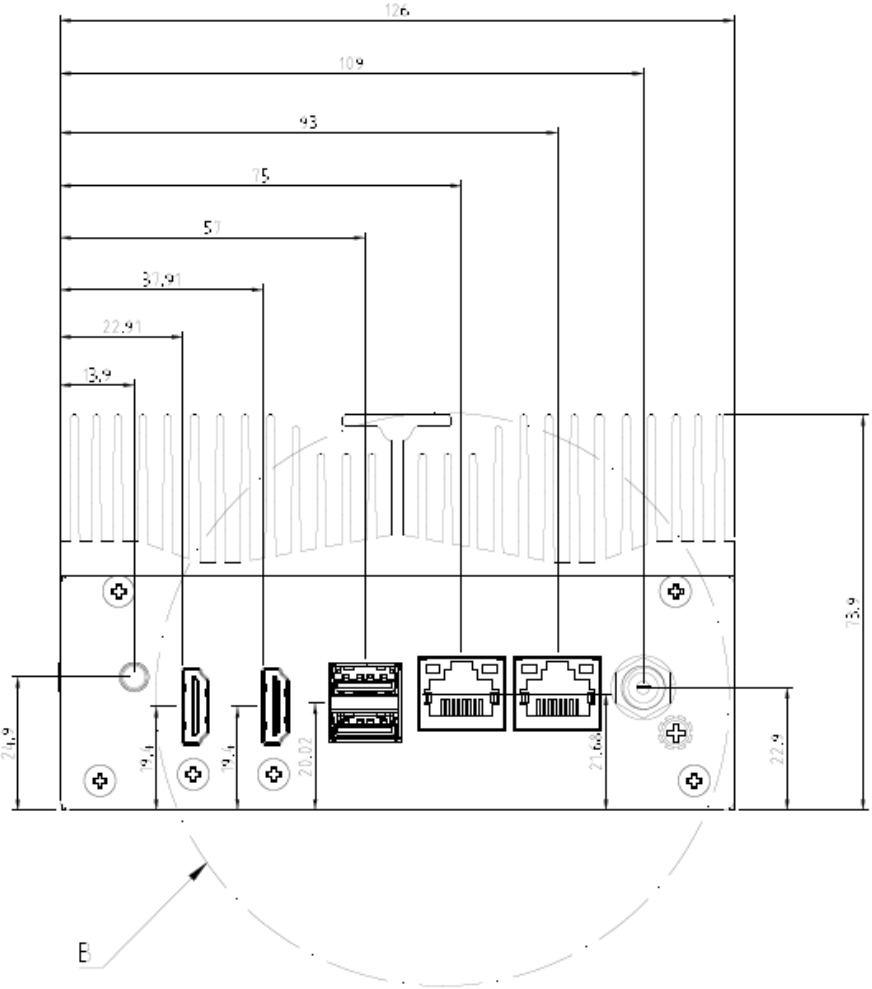
126
109
93
75
57
37.91
22.91
13.9
73.9
24.9
9.4
9.4
20.02
21.68
22.9
B

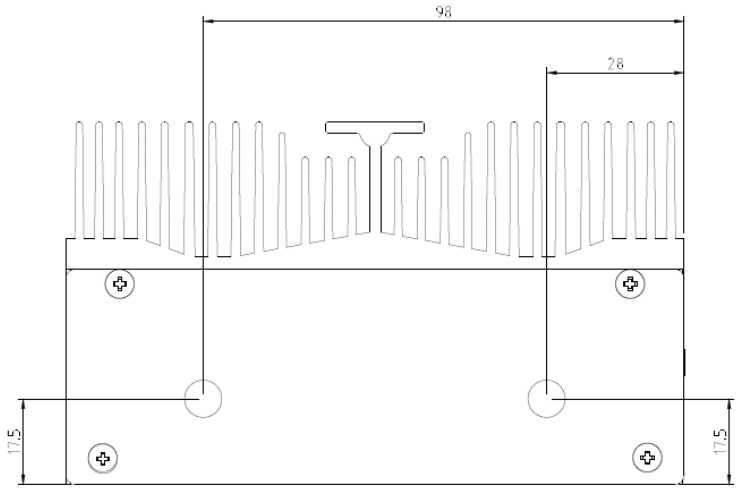

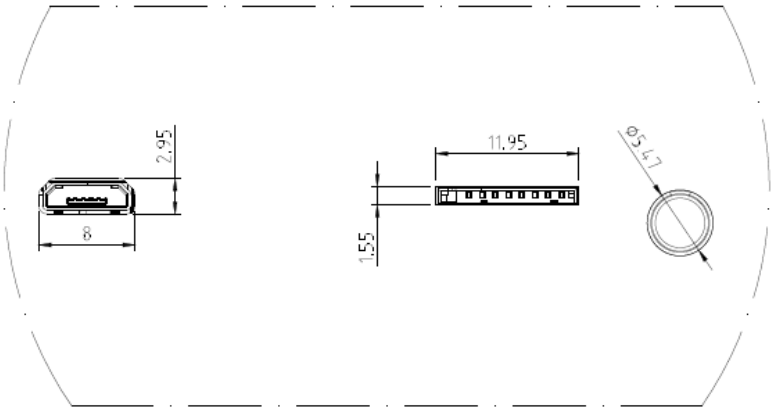

DETAIL A
2 : 1

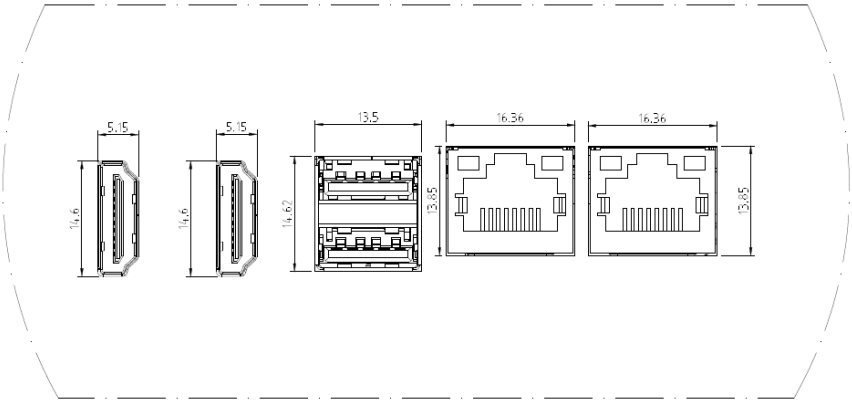

DETAIL B
2 : 1

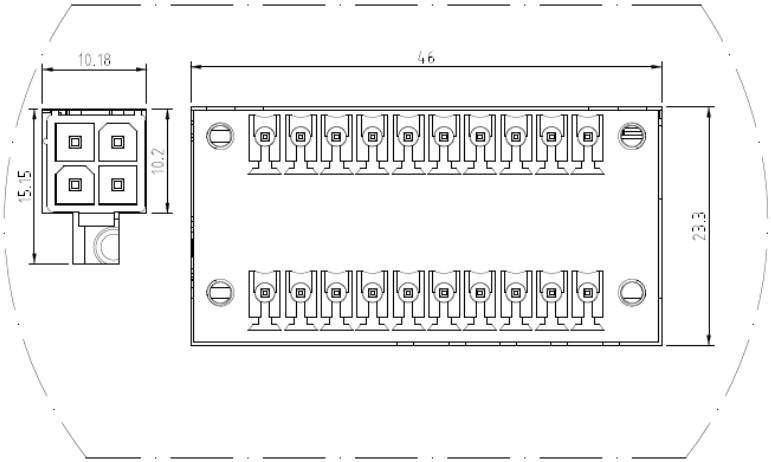

DETAIL C
2 : 1