DI-1100

Intel® 8th Gen. Core™ U Series Processor, High Performance and Power Saving Rugged Embedded Computer

Compact yet Intelligent

DI-1100 High-performance, Power-saving Rugged Computer

Overview

CONTACT

The DI-1100 packs high performance, lots of I/O ports, and expansion flexibility in a compact form factor. The DI-1100 is powered by an 8th Gen Intel® Core™ U-Series processor (Whiskey Lake) with ultra-low 15W TDP yet delivering uncompromised performance. The DI-1100 shines because it fits multiple I/Os and other expansion options into a very compact chassis, making it the perfect high-performance rugged embedded computer for space-constrained environments. The DI-1100 is ideal for industrial applications, logistics and warehousing, transportation, security and surveillance, IoT deployments, and other applications.

Key Features

- Onboard Intel ® 8th Gen. Core™ Ui7/i5/i3 Processor (TDP 15W)
- 1x 2.5" front-accessible SATA HDD bay for quick access and 1x mSATA socket
- 2x full-size Mini PCIe sockets for module expansion
- 2x front-accessible SIM card slots for signal redundancy
- Optional CMI modules (2x 10 GbE LAN, M12 A-coded, or M12 X-coded)
- Optional CFM modules (power ignition sensing, or 4x PoE)
- Wide operating temperature -40°C to 70°C
- MIL-STD-810G, E-mark, and EN50155 (EN 50121-3-2 only) certified

Certifications

Power Ignition Sensing · PoE · RAID · EN50121-3-2 · E13 · FC · CE · MEC TECHNOLOGY · CMI TECHNOLOGY · CFM TECHNOLOGY

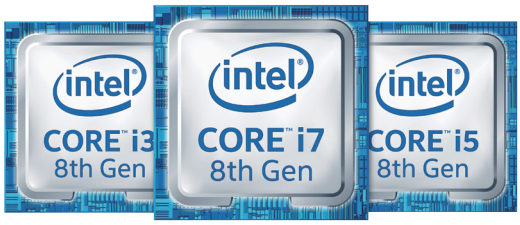

15W TDP CPU DESIGN

High Performance and Power Saving

POWER SAVING

The DI-1100 has options for an 8th Gen Intel® Core™ U i7, i5, or i3 processor, powered by four cores and eight threads, delivering extraordinary performance and responsiveness to complete computationally intensive tasks more quickly. The processing architecture fulfills the need for increased graphics and computation performance while providing the headroom to consolidate data and applications for IoT deployment. Topped off with a 15W CPU, it's ideal for mobile machinery reducing the time between recharges for maximum efficiency.

Compact Form Factor

The DI-1100 has a small form factor, measuring only 203 mm (W) x 142 mm (D) x 66.8 mm (H). This compact size makes the DI-1100 easy to install anywhere you can imagine, especially in today's space-limited IoT applications, ranging from equipment such as Automated Guided Vehicles (AGVs) and Autonomous Mobile Robots (AMRs) to vehicles and the small cabinets in factories.

Various Industrial I/O and Functionalities

The DI-1100's compact design doesn't sacrifice I/O and functionality. The DI-1100 includes 2x GbE LAN, 4x USB 3.2, 2x USB 2.0, and 2x RS232/422/485 to connect high-speed and legacy devices. The DI-1100 also supports 2x full-size Mini PCIe sockets for wireless connectivity as well as 2x SIM card slots for cellular network redundancy to ensure uninterrupted data transmission. In addition, it offers an external fan for additional cooling when using high-watt peripherals like cameras thru PoE.

Exclusive
Expansion Capabilities

The DI-1100 provides modular expansion through Combined Multiple I/O (CMI) and Control Function Module (CFM) and can be configured for further I/O and function customization. This flexibility allows integrators to quickly configure the system and rapidly deploy to the market. The CMI modules include extra LAN, 10GbLAN, M12 connections (A- and X-coded), and various I/O interfaces, while CFM provides power ignition sensing or PoE functionality.

Flexible
Mounting

Multiple mounting methods are ready for use in various industrial environments, including wall, side, DIN-rail, and VESA mountings. These mounting options help integrators quickly and easily mount the DI-1100 anywhere, whether on the field side, cabinets, or inside of other equipment.

Robust Design with
Industry Certifications

The DI-1100 is engineered with a robust design to withstand extreme environments. It features a wide operating temperature range of -40 to 70°C, wide-range voltage input of 9 to 48 VDC, over-voltage protection, over-current protection, and ESD protection. The DI-1100 passed the tests to ensure compliance with MIL-STD-810G, E-mark, and EN50155 (EN 50121-3-2 only).

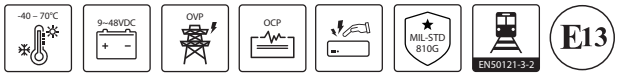

Specifications

Model Name	DI-1100
System	
Processor	Onboard 8th Intel® Core™ U Processors (Whiskey Lake) ▪ Intel® Core™ i7-8665UE Quad Core Processor (8M Cache, up to 4.4 GHz, 15W) ▪ Intel® Core™ i5-8365UE Quad Core Processor (6M Cache, up to 4.10 GHz, 15W) ▪ Intel® Core™ i3-8145UE Dual Core Processor (4M Cache, up to 3.90 GHz, 15W)
Memory	▪ 1x DDR4 SO-DIMM Socket, Support Up to 2400MHz 32 GB (Un-buffered and non-ECC)
BIOS	▪ AMI BIOS
Graphics	
Graphics Engine	▪ Integrated Intel® UHD Graphics 620
Maximum Display Output	▪ Supports Triple Independent Display
HDMI®	▪ 1x HDMI® Connector (4096 x 2304@60Hz)
DP	▪ 1x DisplayPort Connector (4096 x 2304 @ 60Hz, According to CPU Specifications) * Verified maximum resolution: 3840x2160
VGA	▪ 1x VGA Connector (1920 x 1200 @60Hz)
Audio	
Audio Codec	▪ Realtek® ALC888, High Definition Audio
Line-out	▪ 1x Line-out, Phone Jack 3.5mm
Mic-in	▪ 1x Mic-in, Phone Jack 3.5mm
I/O	
LAN	▪ 2x GbE LAN, RJ45 - GbE1: Intel® I219 - GbE2: Intel® I210
COM	▪ 2x RS-232/422/485 with Auto Flow Control (Supports 5V/12V), DB9
USB	▪ 2x 10 Gbps USB 3.2 Gen2, Type A ▪ 2x 5 Gbps USB 3.2 Gen1, Type A ▪ 2x 480 Mbps USB 2.0, Type A
PS/2	▪ 1x PS/2, 6 Pin Mini-DIN Female Connector
Storage	
SSD/HDD	▪ 1x 2.5" Front Accessible SATA HDD/SSD Bay (SATA3.0)
mSATA	▪ 1x mSATA Socket (SATA 3.0, shared by Mini-PCIe socket)
RAID	▪ Support RAID 0/1
Expansion	
Mini PCI Express	▪ 2x Full-size Mini-PCIe Socket
SIM Socket	▪ 2x SIM Socket
CMI (Combined Multiple I/O) Interface	▪ 1x High Speed CMI Interface for optional CMI Module Expansion ▪ 1x Low Speed CMI Interface for optional CMI Module Expansion
CFM (Control Function Module) Interface	▪ 1x CFM IGN Interface for optional CFM-IGN Module Expansion
Other Function	
External FAN Connector	▪ 1x External FAN Connector, 4-pin Terminal Block (Support Smart Fan by BIOS)

Power Ignition Sensing	▪ Support Power Ignition Sensing Function with Delay Time Management and Selectable 12V/24V (With Optional CFM Module)
Clear CMOS Switch	▪ 1x Clear CMOS Switch
Reset Button	▪ 1x Reset Button
Instant Reboot	▪ Support 0.2sec Instant Reboot Technology
Watchdog Timer	▪ Software Programmable Supports 256 Levels System Reset
Power Requirement	
Power Button	▪ 1x ATX Power On/Off Button
Power Mode Switch	▪ 1x AT/ATX Mode Switch
Power Input	▪ 9 - 48VDC, 3-pin Terminal Block
Remote Power On/Off	▪ 1x Remote Power On/Off, 2-pin Terminal Block
Remote Power LED	▪ 1x Remote Power LED, 2-pin Terminal Block
Total Power Budget	▪ 120W
Physical	
Dimension (W x D x H)	▪ 203 x 142 x 66.8 mm
Weight Information	▪ 1.74 KG
Mechanical Construction	▪ Extruded Aluminum with Heavy Duty Metal
Mounting	▪ Wall / Side / DIN-RAIL / VESA Mount
Physical Design	▪ Fanless Design ▪ Cableess Design ▪ Jumper-less Design ▪ Unibody Design
Reliability & Protection	
Reverse Power Input Protection	▪ Yes
Over Voltage Protection	▪ Protection Range: 51~58V ▪ Protection Type: shut down operating voltage, re-power on at the preset level to recover
Over Current Protection	▪ 15A
CMOS Battery Backup	▪ SuperCap Integrated for CMOS Battery Maintenance-free Operation
MTBF	▪ 513,628 Hours - Database: Telcordia SR-332 Issue3, Method 1, Case 3
Operating System	
Windows	▪ Windows® 10
Linux	▪ Supports by project
Environment	
Operating Temperature	▪ 15W CPU: -40°C to 70°C * PassMark Burn-In Test: 100% CPU, 2D/3D Graphics (without thermal throttling) * With extended temperature peripherals; Ambient with air flow * According to IEC60068-2-1, IEC60068-2-2, IEC60068-2-14 ▪ 15W CPU + 61.6W PoE + FAN: -40°C to 70°C * PassMark Burn-In Test: 100% CPU, 2D/3D Graphics (without thermal throttling) * 4 Port PoE Full-load, IEEE 802.3af Class3(15.4 Watt) * With extended temperature peripherals; Ambient with air flow
Storage Temperature	▪ -40°C to 85°C
Relative Humidity	▪ 95%RH @ 70°C (non-Condensing)
Shock	▪ MIL-STD-810G

Vibration	▪ MIL-STD-810G
EMC	▪ CE, UKCA, FCC, ICES-003 Class A ▪ EN 50155 (EN 50121-3-2 Only) ▪ E-mark
EMI	▪ CISPR 32 Conducted & Radiated: Class A ▪ EN/BS EN 50121-3-2 Conducted & Radiated: Class A ▪ EN/BS EN IEC 61000-3-2 Harmonic current emissions: Class A ▪ EN/BS EN61000-3-3 Voltage fluctuations & flicker ▪ FCC 47 CFR Part 15B, ICES-003 Conducted & Radiated: Class A
EMS	▪ EN/IEC 61000-4-2 ESD: Contact: 6 kV; Air: 8 kV ▪ EN/IEC 61000-4-3 RS: 80 MHz to 1000 MHz: 20 V/m ▪ EN/IEC 61000-4-4 EFT (with optional PPM module): AC Power: 2 kV; DC Power: 1 kV; Signal: 2 kV ▪ EN/IEC 61000-4-5 Surges: AC Power: 2 kV ▪ EN/IEC 61000-4-6 CS: 10V ▪ EN/IEC 61000-4-8 PFMF: 50 Hz, 1A/m ▪ EN/IEC 61000-4-11 Voltage Dips & Voltage Interruptions: 0.5 cycles at 50 Hz
Safety	▪ IEC/EN 62368-1

The terms HDMI, HDMI High-Definition Multimedia Interface, HDMI Trade dress and the HDMI Logos are trademarks or registered trademarks of HDMI Licensing Administrator, Inc.

External Layout

Front

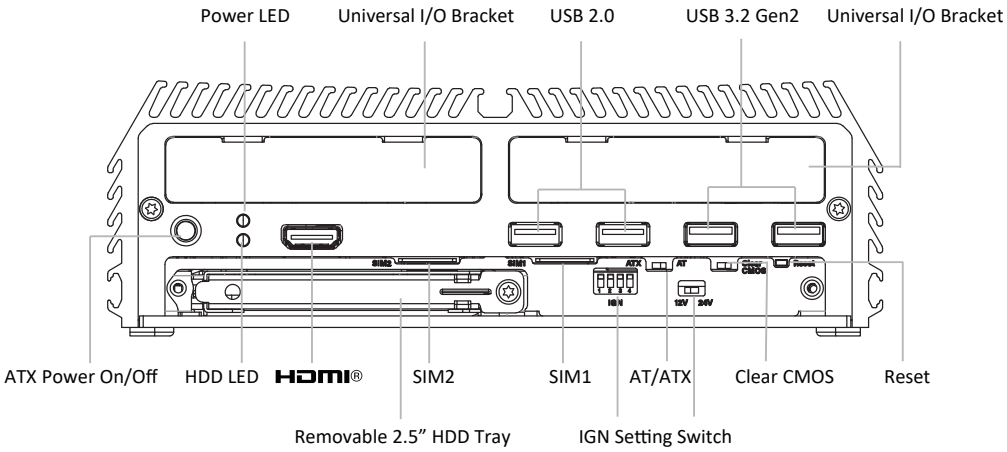

Rear

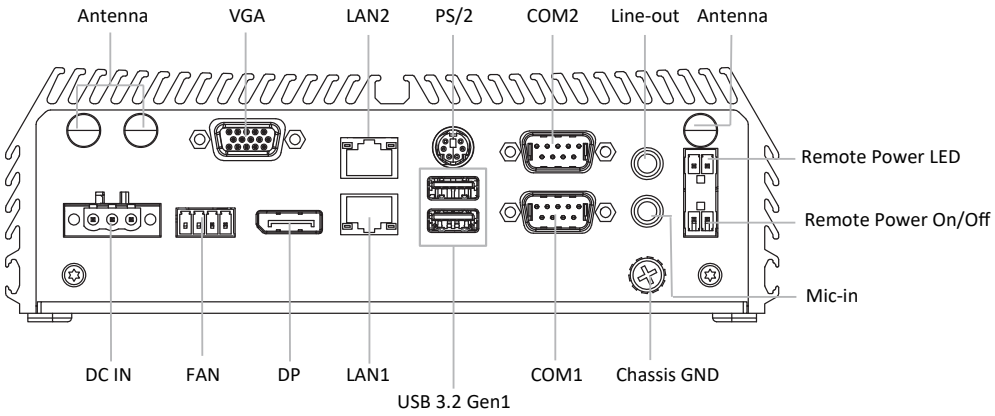

Dimensions

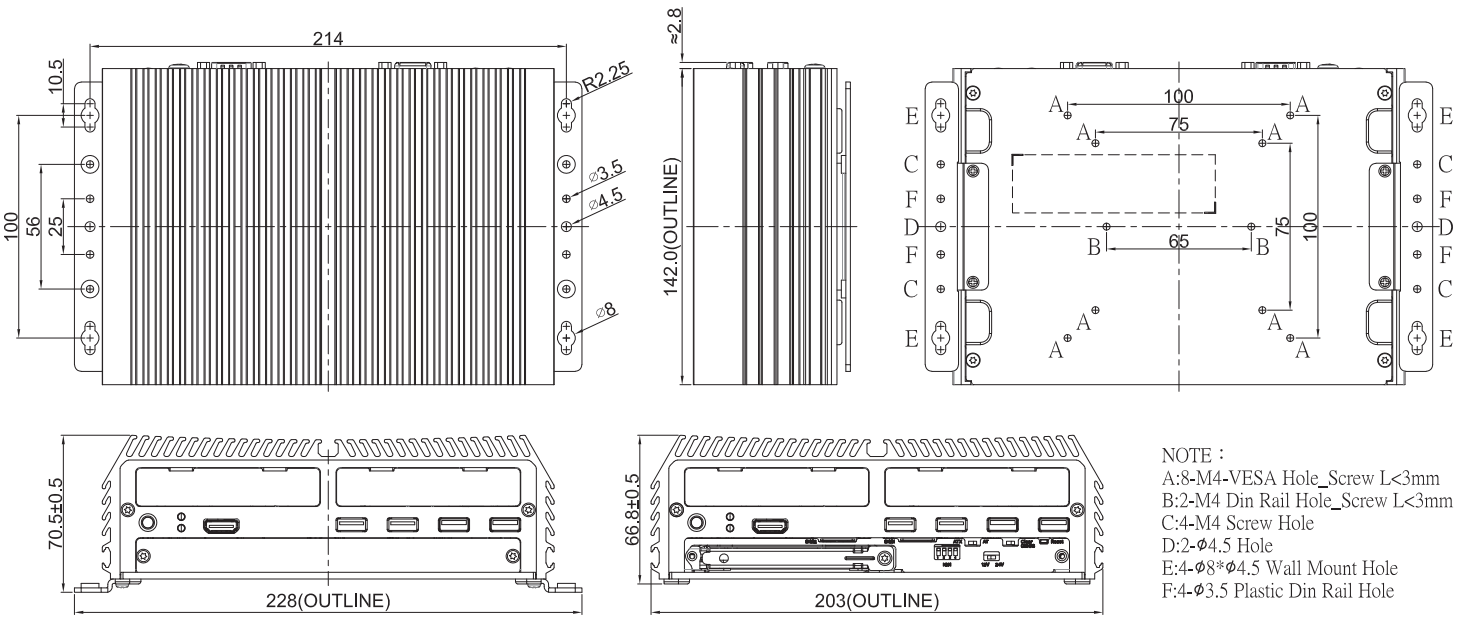

NOTE：
A:8-M4-VESA Hole_Screw L<3mm
B:2-M4 Din Rail Hole_Screw L<3mm
C:4-M4 Screw Hole
D:2-Φ4.5 Hole
E:4-Φ8*Φ4.5 Wall Mount Hole
F:4-Φ3.5 Plastic Din Rail Hole

Unit: mm

Ordering Information

Available Models

Model No.	Description
DI-1100-i3-R10	8th Generation Intel Core i3-8145UE High Performance, Compact and Modular Rugged Embedded Computer
DI-1100-i5-R10	8th Generation Intel Core i5-8365UE High Performance, Compact and Modular Rugged Embedded Computer
DI-1100-i7-R10	8th Generation Intel Core i7-8665UE High Performance, Compact and Modular Rugged Embedded Computer

Package Checklist

- DI-1100 Embedded System x1
- Heatsink Pack x1
- Wall Mount Kit x1
- Screw Pack x1
- Remote Function Terminal Block Connector x2
- Power Terminal Block Connector x1
- Fan Terminal Block Connector x1

Optional I/O Modules

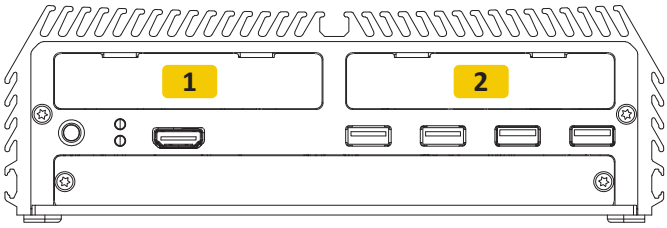

Model No.	Description	1	2
CMI-LAN01-R12 / UB1512-R11	CMI Module with 4x Intel I210 GbE LAN, RJ45 Port / 1x Universal Bracket with 4x RJ45 Cutout	--	V
CMI-M12LAN01-R12 / UB1510-R11	CMI Module with M12 A-Coded Connector, 4x Intel I210 GbE LAN Ports/ 1x Universal Bracket with 4x M12 Cutout	--	V
CMI-XM12LAN01-R10 / UB1510-R11	CMI Module with M12 X-Coded Connector, 4x Intel I210 GbE LAN Ports/ 1x Universal Bracket with 4x M12 Cutout	--	V
CMI-2P5GLAN01-R10 / UB1512-R11	CMI Module with 4x Intel 2.5GbE LAN, RJ45 Port / 1x Universal Bracket with 4x RJ45 Cutout	--	V
CMI-10GLAN04-R10/UB1528-R11	CMI Module with 2x Intel X550 10GbE LAN, RJ45 Port / 1x Universal Bracket with 2x RJ45 Cutout	--	V
CMI-10GXM12LAN01-R10/UB1537-R10	CMI Module with 2x Intel 10GbE LAN, M12 X-Coded Connector / Universal Bracket with 2x M12 X-coded Cutout	--	V

CMI-CAN01-R10/UB1538-R10	CMI Module with 2x CAN FD Ports / Universal Bracket with 2x DB9 and 1× Switch Cutout for CMI-CAN Expansion	--	V
CMI-COM05-R10/UB1503-R11	CMI Module with 2x RS232/422/485 Ports (Support 5V/12V) / 1x Universal Bracket with 2x DB9 Cutout	V	--
CMI-DIO05-R10/UB1518-R10	CMI Module with 16DIO (8in 8out) / 1x Universal Bracket with DIO Cutout	V	--
MEC-LAN-M102-30/UB1511-R11	Mini-PCIe Module with 2x LAN Ports, 2x 30cm cable / 1x Universal Bracket with 2x RJ45 Cutout	V	V
MEC-COM-M212-TDB9/UB1503-R11	Mini-PCIe Module with 2x RS-232 Serial Ports, 1x Thin DB9 Cable / 1x Universal Bracket with 2x DB9 Cutout	V	V

V : Compatible

Optional Function Modules

Model No.	Description
CFM-PoE06-R10	CFM Module with PoE Function, Individual Port 25.5W
CFM-IGN102	CFM Module with Power Ignition Sensing Function, 12V/24V Selectable

Optional Accessories

Model No.	Description
DINRAIL-R10	Diamond series DIN-RAIL Mount Kit
SIDE01	SIDE Mount Kit
FAN-EX103	External Fan with 4pin Terminal Block Plug and Mounting Bracket, Support Smart Fan (*External fan must be installed when using CFM-PoE module)
GST60A12-CIN1	Adapter AC/DC 12V 5A 60W with 3pin Terminal Block Plug and Tubes, Level VI
GST120A24-CIN	Adapter AC/DC 24V 5A 120W with 3pin Terminal Block Plug and Tubes, Level VI
GST220A24-CIN	Adapter AC/DC 24V 9.2A 220W with 3pin Terminal Block Plug and Tubes, Level VI
RSD-200D-24	Railway Single Output DC-DC Converter 200W / DC 24V
PPM-I180-03-R10	180W Power Protection Module for DI-1100 Series

Updated: Sep. 30, 2026

© Cincoze Co., Ltd. All Rights Reserved. Specifications subject to change without notice.
All product names, logos, and brands are the property of their respective owners. All company, product and service names used in this document are for identification purposes only. The use of these names, logos, and brands does not imply endorsement.