# DI-1200

12th Generation Intel Core i7/i5/i3 High Performance, Compact and Modular Rugged Embedded Computer

## HIGH PERFORMANCE · POWER-SAVING

**DI-1200** | Intel Alder Lake-P Compact Rugged Computer

## Overview

CONTACT

The DI-1200, with a 12th generation Intel® Core™ U-series (Alder Lake-P Platform) processor, provides outstanding performance and boasts a low power consumption of 15W. The compact DI-1200 offers rich I/O interfaces and expansion options, meeting the requirements for high-performance, rugged embedded computers used in confined spaces. It suits for industrial automation, warehousing and logistics, transportation, environmental monitoring, and IoT applications.

### Key Features

- Onboard 12th Intel® Alder Lake-P U-Series Core™ i7/i5/i3 Processors
- 1 x DDR5 SO-DIMM Sockets, Supports up to 4800MHz 32GB Memory
- Quad Independent Display (2x DP/HDMI®/CMI Display)
- 1x M.2 Key E Type 2230 Socket for Storage/Wireless/Bluetooth/Intel CNVi Module Expansion
- 1x M.2 Key B Type 3042/3052 Socket for 5G/Storage/GNSS/Add-on Card Expansion
- CMI Technology for Optional I/O Module Expansions
- CFM Technology for Power Ignition Sensing Function & PoE
- Wide Operating Temperature -40°C to 70°C
- Safety Standard: UL, cUL, CB, IEC, EN 62368-1

### Certifications

EN 50121-3-2 | EN 61000-6-2 | EN 61000-6-4 | MIL-STD-810H | EN 62368-1 | c UL us LISTED | CB | E13

## High Performance & Power Saving

The DI-1200 supports the 12th generation Core™ i7/i5/i3 U-series (Alder Lake-P) processor based on the Intel® 7 process. Its exceptional processing performance and ultra-low power consumption of just 15W, make it highly suitable for mobile devices limited by battery capacity.

**15 Watts**

Low Power Consumption

## Smaller than A5

The DI-1200 has a footprint smaller than a sheet of A5 paper, with dimensions of only 203 x 142 x 66.8 mm. It is ideal for mobile devices such as AGVs and AMRs, tight spaces in vehicles, or small cabinets in factories.

## High-speed I/O

The DI-1200 offers a range of high-speed I/O, including LAN (10GbE, 2.5GbE, 1GbE), USB 3.2 (10Gbps, 5Gbps), USB 2.0, and more, making data and image transmission faster and allowing easy connection to various high-speed devices.

## Comprehensive Wireless Options

The DI-1200 has one M.2 Key E slot and one M.2 Key B slot, supporting a full range of wireless transmission options, including GSM, GNSS, Wi-Fi, and Bluetooth. It also supports the Intel CNVi module, meeting diverse transmission needs.

## Quick Hard Drive Removal

Mobile devices must allow quick access to data. The DI-1200 features a hot-swappable 2.5-inch SATA HDD/SSD slot in the front panel of the chassis, making it easy to remove the hard drive and access the data on it.

## Secure & Rugged

The DI-1200 showcases its ruggedness and industrial-grade protections through multiple industry certifications. It complies with industrial EMC standards (IEC 61000-6-2 and IEC 61000-6-4), ensuring reliable operation in external electromagnetic interference from surrounding devices. The DI-1200 also meets the U.S. military standard, MIL-STD-810H, ensuring stable operation under extreme shock and vibration conditions.

## Specifications

| Model Name | DI-1200 |
|---|---|
| **System** | |
| Processor | ▪ Onboard 12th Intel® Alder Lake-P U-Series CPU:<br>- Intel® Core™ i7-1265UE 10 Cores Up to 4.70 GHz, TDP 15W<br>- Intel® Core™ i5-1245UE 10 Cores Up to 4.40 GHz, TDP 15W<br>- Intel® Core™ i3-1215UE 6 Cores Up to 4.40 GHz, TDP 15W |
| Memory | ▪ 1x DDR5 SO-DIMM Socket, Supports Un-buffered and non-ECC Type, Up to 32GB |
| BIOS | ▪ AMI BIOS |
| **Graphics** | |
| Graphics Engine | ▪ Integrated Intel® Iris® Xe Graphics: Core™ i7-1265UE, i5-1245UE<br>▪ Integrated Intel® UHD Graphics: Core™ i3-1215UE |
| Maximum Display Output | ▪ Supports Quad Independent Display |
| HDMI® | ▪ 1x HDMI® Connector (3840 x 2160@60Hz) |
| DP | ▪ 2x DisplayPort Connector (3840 x 2160@60Hz) |
| CMI Display | ▪ 1x CMI Interface for Optional CMI-DP/CMI-HDMI®/CMI-VGA Module Expansion |
| **Audio** | |
| Audio Codec | Realtek® ALC888, High Definition Audio |
| Line-out | ▪ 1x Line-out, Phone Jack 3.5mm |
| Mic-in | ▪ 1x Mic-in, Phone Jack 3.5mm |
| **I/O** | |
| LAN | ▪ 2x 2.5 GbE LAN, RJ45<br>- GbE1: Intel® I226<br>- GbE2: Intel® I226 |
| COM | ▪ 2x RS-232/422/485 with Auto Flow Control (Supports 5V/12V), DB9 |
| USB | ▪ 1 x USB 3.2 Gen2x1 (10Gbps), Type A<br>▪ 2 x USB 3.2 Gen1x1 (5Gbps), Type A<br>▪ 3 x USB 2.0 (480Mbps), Type A |
| **Storage / Expansion** | |
| 2.5" Storage | ▪ 1x 2.5" SATA HDD/SSD Bay (SATA 3.0) |
| M.2 Key B Socket | ▪ 1x M.2 Key B Type 3042/3052 Socket (PCIe Gen 3x1 / USB3.2 Gen2 x1 / SATA ), Support 5G/Storage/GNSS/Add-on Card Expansion<br>* The maximum height of the M.2 Key B add-on card varies depending on the installed CMI module. Please refer to the manual for detailed information. |
| M.2 Key E Socket | ▪ 1x M.2 Key E Type 2230 Socket (PCIe Gen 3x1 / USB2.0), Support Wireless/Bluetooth/Intel CNVi Module Expansion<br>* The maximum height of the M.2 Key E add-on card is limited to 6.7mm. |
| SIM Socket | ▪ 2 x Front Accessible SIM Socket |
| CMI (Combined Multiple I/O) Interface | ▪ 1x CMI Interface for optional CMI-LAN Module Expansion<br>▪ 1x CMI Interface for optional CMI-Display / CMI-COM / CMI-DIO Module Expansion |
| CFM (Control Function Module) Interface | ▪ 1x CFM IGN Interface for optional CFM-IGN Module Expansion |

| | |
|---|---|
| **Other Function** | |
| RAID | ▪ Support RAID 0/1 |
| External FAN Connector | ▪ 1x External FAN Connector, 4-pin Terminal Block (Support Smart Fan by BIOS) |
| Clear CMOS Switch | ▪ 1x Clear CMOS Switch |
| Reset Button | ▪ 1x Reset Button |
| Watchdog Timer | ▪ Software Programmable Supports 256 Levels System Reset |
| **Power** | |
| Power Button | ▪ 1x ATX Power On/Off Button |
| Power Mode Switch | ▪ 1x AT/ATX Mode Switch |
| Power Input | ▪ 9 - 48VDC, 3-pin Terminal Block |
| Remote Power On/Off | ▪ 1x Remote Power On/Off, 2-pin Terminal Block |
| Remote Power LED | ▪ 1x Remote Power LED, 2-pin Terminal Block |
| Max. Power Consumption | ▪ I7-1265UE: 104.74W<br>- Test conducted with CPU, 1x RAM, and 1x storage<br>- 100% load during burn-in testing |
| Inrush Current (Peak) | ▪ I7-1265UE CPU: 4.963 A@24V |
| **Physical** | |
| Dimension ( W x D x H ) | ▪ 203 x 142 x 66.8 mm |
| Weight Information | ▪ 1.8 KG |
| Mechanical Construction | ▪ Extruded Aluminum with Heavy Duty Metal |
| Mounting | ▪ Wall / Side / DIN-RAIL / VESA Mount |
| Physical Design | ▪ Fanless Design<br>▪ Cableless Design<br>▪ Jumper-less Design<br>▪ Unibody Design |
| **Reliability & Protection** | |
| Reverse Power Input | ▪ Yes |
| Over Voltage Protection | ▪ Protection Range: 51~58V<br>▪ Protection Type: shut down operating voltage, re-power on at the preset level to recover |
| Over Current Protection | ▪ 15A |
| CMOS Battery Backup | ▪ SuperCap Integrated for CMOS Battery Maintenance-free Operation |
| MTBF | ▪ 486,235 Hours - Database: Telcordia SR-332 Issue3, Method 1, Case 3 |
| **Operating System** | |
| Windows | ▪ Windows®11, Windows®10 |
| Linux | ▪ Ubuntu Desktop 22.04 LTS |

| Environment | |
|---|---|
| Operating Temperature | ▪ -20°C to 70°C (-4°F to 158°F)<br>- PassMark Burn-In Test: 100% CPU, 2D/3D Graphics (without thermal throttling)<br>- With extended temperature peripherals; Ambient with air flow<br>- According to IEC60068-2-1, IEC60068-2-2, IEC60068-2-14 |
| Storage Temperature | ▪ -40°C to 85°C (-40°F to 185°F) |
| Relative Humidity | ▪ 95%RH @ 70°C (non-Condensing) |
| Shock | ▪ MIL-STD-810H |
| Vibration | ▪ MIL-STD-810H |
| EMC | ▪ CE, UKCA, FCC, ICES-003 Class A<br>▪ EN IEC 61000-6-4 / EN IEC 61000-6-2 (24VDC Input Only)<br>▪ EN 50155 (EN 50121-3-2 Only)<br>▪ E-mark |
| EMI | ▪ CISPR 32 Conducted & Radiated: Class A<br>▪ EN/BS EN 50121-3-2 Conducted & Radiated: Class A<br>▪ EN/BS EN IEC 61000-3-2 Harmonic current emissions: Class A<br>▪ EN/BS EN 61000-3-3 Voltage fluctuations & flicker<br>▪ FCC 47 CFR Part 15B, ICES-003 Conducted & Radiated: Class A |
| EMS | ▪ EN/IEC 61000-4-2 ESD: Contact: 6 kV; Air: 8 kV<br>▪ EN/IEC 61000-4-3 RS: 80 MHz to 1000 MHz: 20 V/m<br>▪ EN/IEC 61000-4-4 EFT: AC Power: 2 kV; DC Power: 2 kV; Signal: 2 kV<br>▪ EN/IEC 61000-4-5 Surges: AC Power: 2 kV; Signal: 1 kV<br>▪ EN/IEC 61000-4-6 CS: 10V<br>(**Compliant with the standard when utilizing shielded cable.)<br>▪ EN/IEC 61000-4-8 PFMF: 50 Hz, 30A/m<br>▪ EN/IEC 61000-4-11 Voltage Dips & Voltage Interruptions: 1 cycles at 60 Hz |
| Safety | UL, cUL, CB, IEC, EN 62368-1 |

The terms HDMI, HDMI High-Definition Multimedia Interface, HDMI Trade dress and the HDMI Logos are trademarks or registered trademarks of HDMI Licensing Administrator, Inc.

## External Layout

### Front I/O

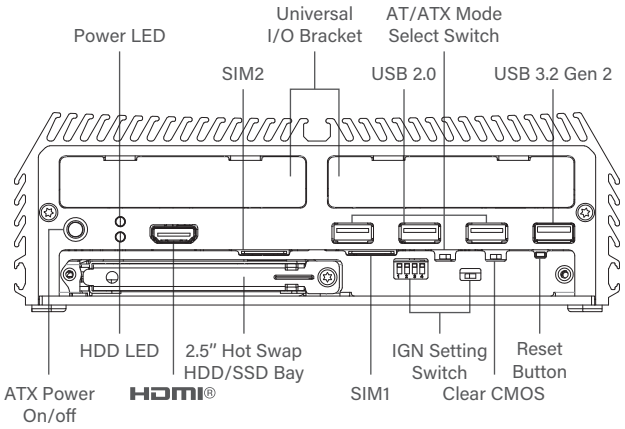


### Rear I/O

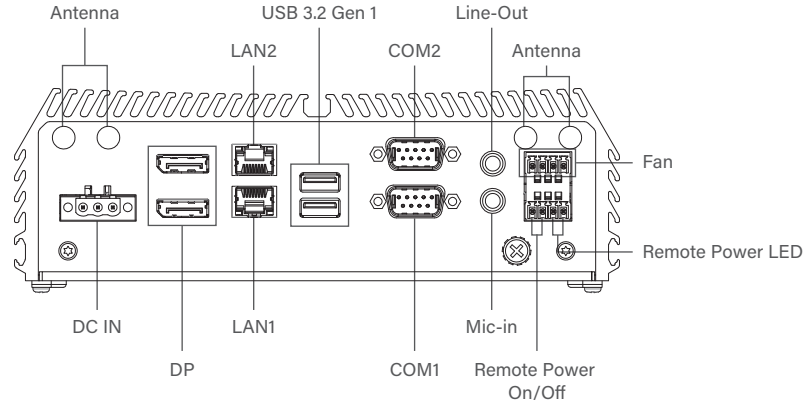


## Dimensions

NOTE：
A:8-M4-VESA Hole_Screw L<3mm
B:2-M4 Din Rail Hole_Screw L<3mm
C:4-M4 Screw Hole
D:2-Φ4.5 Hole
E:4-Φ8*Φ4.5 Wall Mount Hole
F:4-Φ3.5 Plastic Din Rail Hole

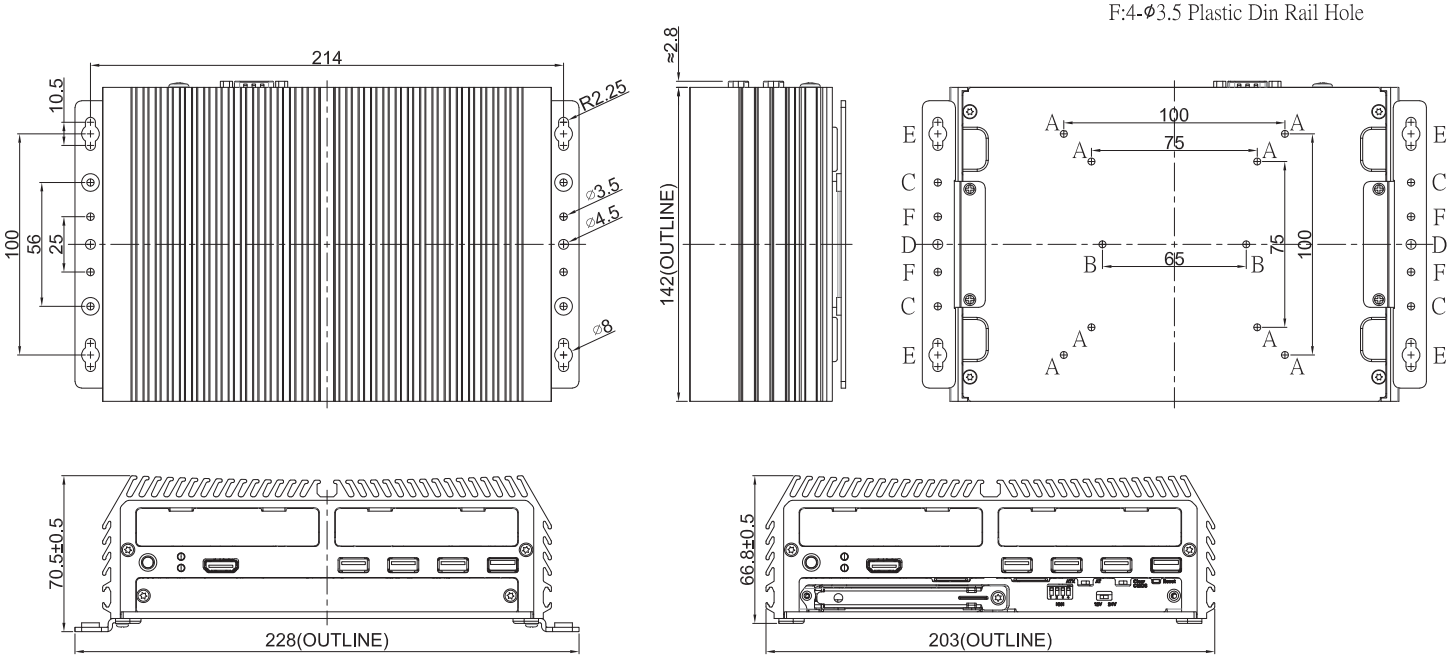


Unit: mm

# Ordering Information

## Available Models

| Model No. | Description |
|---|---|
| DI-1200-i7-R11 | 12th Generation Intel Core i7-1265UE High Performance, Compact and Modular Rugged Embedded Computer |
| DI-1200-i5-R11 | 12th Generation Intel Core i5-1245UE High Performance, Compact and Modular Rugged Embedded Computer |
| DI-1200-i3-R11 | 12th Generation Intel Core i3-1215UE High Performance, Compact and Modular Rugged Embedded Computer |

## Package Checklist

| | |
|---|---|
| ▪ DI-1200 Embedded Computer x1 | ▪ Power Terminal Block Connector x 1 |
| ▪ CPU Thermal Pad x1 | ▪ Remote Power On/Off + Remote Power LED Connector x 1 |
| ▪ Screw Pack x 1 | ▪ Fan Terminal Block Connector x 1 |
| ▪ Wall Mounting Kit x 1 | ▪ M.2 Key B Type 3052 to 3042 Adapter Bracket x 1 |

## Optional Modules and Accessories

| Model No. | Description |
|---|---|
| CFM-IGN102 | CFM Module with Power Ignition Sensing Control Function, 12V/24V Selectable |
| CFM-PoE06-R10 | CFM Module with PoE Function, Individual Port 25.5W |
| CMI-LAN01-R12 | CMI Module with 4x RJ45 Intel I210 GbE LAN Ports |
| CMI-M12LAN01-R12 | CMI Module with 4 x M12 Intel I210 GbE LAN Ports |
| CMI-XM12LAN01-R10 | CMI Module with M12 X-Coded Connector, 4x Intel I210 GbE LAN Ports |
| CMI-2P5GLAN01-R10 | CMI Module with 4x Intel 2.5GbE LAN, RJ45 Port |
| CMI-10GLAN04-R10 | CMI Module with 2x Intel X550 10GbE LAN Ports |
| CMI-10GXM12LAN01-R10 | CMI Module with 2x Intel 10GbE LAN, M12 X-Coded Connector |
| CMI-CAN01-R10 | CMI Module with 2x CAN FD Ports |
| CMI-VGA02-R10 | CMI Module with 1x VGA Port |
| CMI-HD04-R10 | CMI Module with 1x HDMI® Port |
| CMI-DP02-R10 | CMI Module with 1x DisplayPort |
| CMI-DIO05-R10 | CMI Module with 16DIO (8in 8out) |
| CMI-COM05-R10 | CMI Module with 2x RS232/422/485 (Support 5V/12V) |
| UB1503-R11 | Universal Bracket with 2x DB9 Cutout |
| UB1506-R10 | Universal Bracket with DisplayPort Cutout |
| UB1508-R10 | Universal Bracket with HDMI® Cutout |
| UB1510-R11 | Universal Bracket with 4x M12 Cutout |
| UB1512-R11 | Universal Bracket with 4x RJ45 Cutout for CMI-LAN Expansion |
| UB1516-R10 | Universal Bracket with VGA Cutout |
| UB1518-R10 | Universal Bracket with DIO Cutout |

| | |
|---|---|
| UB1528-R11 | Universal Bracket with 2x RJ45 Cutout for CMI-10GLAN Expansion |
| UB1537-R10 | Universal Bracket with 2x M12 X-coded Cutout |
| UB1538-R10 | Universal Bracket with 2x DB9 and 1× Switch Cutout for CMI-CAN Expansion |
| DINRAIL-R10 | Diamond series DIN-RAIL Mount Kit |
| FAN-EX103 | External Fan with 4pin Terminal Block Plug and Mounting Bracket, Support Smart Fan<br>(*External fan must be installed when using CFM-PoE module) |
| SIDE01 | DI Series Side Mount Kit |
| GST60A12-CIN1 | Adapter AC/DC 12V 5A 60W with 3pin Terminal Block Plug and Tubes, Level VI |
| GST120A24-CIN | Adapter AC/DC 24V 5A 120W with 3pin Terminal Block Plug and Tubes, Level VI |
| GST220A24-CIN | Adapter AC/DC 24V 9.2A 220W with 3pin Terminal Block Plug and Tubes, Level VI |
| RSD-200D-24 | Railway Single Output DC-DC Converter 200W / DC 24V |

## Optional Module Configuration

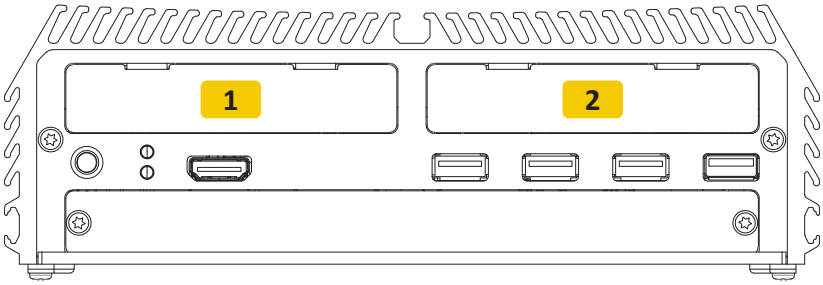


| Model No. | Description | 1 | 2 |
|---|---|---|---|
| CMI-LAN01-R12/UB1512-R11 | CMI Module with 4x Intel I210 GbE LAN, RJ45 Port / Universal Bracket with 4x RJ45 Cutout for CMI-LAN Expansion | -- | V |
| CMI-M12LAN01-R12/UB1510-R11 | CMI Module with M12 Connector, 4x Intel I210 GbE LAN Ports / Universal Bracket with 4x M12 Cutout | -- | V |
| CMI-XM12LAN01-R10/UB1510-R11 | CMI Module with M12 X-Coded Connector, 4x Intel I210 GbE LAN Ports / Universal Bracket with 4x M12 Cutout | -- | V |
| CMI-2P5GLAN01-R10/UB1512-R11 | CMI Module with 4x Intel 2.5GbE LAN, RJ45 Port / Universal Bracket with 4x RJ45 Cutout for CMI-LAN Expansion | -- | V |
| CMI-10GLAN04-R10/UB1528-R11 | CMI Module with 2x Intel X550 10GbE LAN, RJ45 Port / 1x Universal Bracket with 2x RJ45 Cutout for CMI-10GLAN Expansion | -- | V |
| CMI-10GXM12LAN01-R10/UB1537-R10 | CMI Module with 2x Intel 10GbE LAN, M12 X-Coded Connector / Universal Bracket with 2x M12 X-coded Cutout | -- | V |
| CMI-CAN01-R10/UB1538-R10 | CMI Module with 2x CAN FD Ports / Universal Bracket with 2x DB9 and 1× Switch Cutout for CMI-CAN Expansion | -- | V |
| CMI-VGA02/UB1516-R10 | CMI Module with 1x VGA Port/Universal Bracket with VGA Cutout | V | -- |
| CMI-HD04/UB1508-R10 | CMI Module with 1x HDMI® Port/Universal Bracket with HDMI® Cutout | V | -- |
| CMI-DP02/UB1506-R10 | CMI Module with 1x DisplayPort/Universal Bracket with DisplayPort Cutout | V | -- |
| CMI-COM05-R10/UB1503-R11 | CMI Module with 2x RS232/422/485 Ports (Support 5V/12V) / 1x Universal Bracket with 2x DB9 Cutout | V | -- |
| CMI-DIO05-R10 / UB1518-R10 | CMI Module with 16DIO (8in 8out) / 1x Universal Bracket with DIO Cutout | V | -- |

V : Compatible

Updated: Sep. 30, 2026.

© Cincoze Co., Ltd. All Rights Reserved. Specifications subject to change without notice.
All product names, logos, and brands are the property of their respective owners. All company, product and service names used in this document are for identification purposes only. The use of these names, logos, and brands does not imply endorsement.