EAC-4000 USER Manual

NVIDIA® Jetson Orin™ NX/Nano Edge AI Computing System
1 GigE LAN, 4 USB 3.1, 2 COM, -25°C to 55°C Operation

Vecow

1.1.0 Edition 20260106

Record of Revision

Version	Date	Page	Description	Remark
1.00	2025/07/18	All	Official Release	
1.10	2026/01/06	All	Update	

Disclaimer

This manual is released by Vecow Co., Ltd. for reference purpose only. All product offerings and specifications are subject to change without prior notice. It does not represent commitment of Vecow Co., Ltd. Vecow shall not be liable for direct, indirect, special, incidental, or consequential damages arising out of the use of the product; documentation; or for any infringements upon the rights of third parties, which may result from such use.

Declaration of Conformity

FCC

This equipment has been tested and found to comply with the limits for a Class A digital device, pursuant to part 15 of the FCC Rules. These limits are designed to provide reasonable protection against harmful interference when the equipment is operated in a commercial environment. This equipment generates, uses, and can radiate radio frequency energy, and if it is not installed and used in accordance with the instruction manual, it may cause harmful interference to radio communications. Operation of this equipment in a residential area is likely to cause harmful interference in which case the user will be required to correct the interference at his own expense.

CE

The products described in this manual complies with all applicable European Union (CE) directives if it has a CE marking. For computer systems to remain CE compliant, only CE-compliant parts may be used. Maintaining CE compliance also requires proper cable and cabling techniques.

Copyright and Trademarks

This document contains proprietary information protected by copyright. No part of this publication may be reproduced in any form or by any means, electric, photocopying, recording or otherwise, without prior written authorization by Vecow Co., Ltd. The rights of all the brand names, product names and trademarks belong to their respective owners.

Order Information

Part Number	Description
EAC-4000-XR16-S*** (OOB)	EAC-4000, NVIDIA Jetson Orin NX, with On-board 16GB RAM, NVMe SSD, 1 GigE LAN, 4 USB 3.1, 2 COM, 1mPCIe, 1 M.2, 1 SIM, -25°C to 55°C
EAC-4000-XR08-S*** (OOB)	EAC-4000, NVIDIA Jetson Orin NX, with On-board 8GB RAM, NVMe SSD, 1 GigE LAN, 4 USB 3.1, 2 COM, 1mPCIe, 1 M.2, 1 SIM, -25°C to 55°C
EAC-4000-AR08-S*** (OOB)	EAC-4000, NVIDIA Jetson Orin Nano, with On-board 8GB RAM, NVMe SSD, 1 GigE LAN, 4 USB 3.1, 2 COM, 1mPCIe, 1 M.2, 1 SIM, -25°C to 55°C
EAC-4000-AR04-S*** (OOB)	EAC-4000, NVIDIA Jetson Orin Nano, with On-board 4GB RAM, NVMe SSD, 1 GigE LAN, 4 USB 3.1, 2 COM, 1mPCIe, 1 M.2, 1 SIM, -25°C to 55°C

*A NVMe SSD is included in default. Please refer to NVMe SSD List to select NVMe SSD capacity.

NVMe SSD List

Part Number	Description
S128	128GB NVMe SSD
S256	256GB NVMe SSD
S512	512GB NVMe SSD
S01T	1TB NVMe SSD

Optional Accessories

Part Number	Description
PWA-60WP3-WT-12V	60W, 12V, 90V AC to 264V AC Power Adaptor for 3 PIN 5.0mm Terminal Block, -30°C~+70°C
PWA-135W-WT-12V	135W, 12V, 85V AC to 264V AC Power Adapter with 3-pin Terminal Block, Wide Temperature -30°C to +70°C
DIN-RAIL	DIN Rail Kit
M.2 Storage Module	M.2 Key M PCIe Storage Module
4G Module	4G/GPS Module with Antenna
WiFi & Bluetooth	WiFi & Bluetooth Module with Antenna

Table of Contents

CHAPTER 1 GENERAL INTRODUCTION 1

1.1 Overview 1
1.2 Features 2
1.3 Product Specification 3
1.3.1 Specifications of EAC-4000 3
1.3.2 Specifications of EAC-4000-OOB 5
1.4 Mechanical Dimension 7
1.4.1 Dimensions of EAC-4000 7
1.4.2 Dimensions of EAC-4000-OOB 8
1.4.3 Dimensions of EAC-4000F 9

CHAPTER 2 GETTING TO KNOW YOUR EAC-4000 10

2.1 Packing List 10
2.2 Front Panel I/O & Functions 11
2.3 Rear Panel I/O & Functions 19
2.4 Main Board Expansion Connectors 21

CHAPTER 3 SYSTEM SETUP 33

3.1 How to Open Your EAC-4000 33
3.2 Installing Nano SIM Card 34
3.3 Installing MiniPCIe 35
3.4 Installing M.2 36
3.5 Installing Antenna Cable 38
3.6 Mounting Your EAC-4000 39

CHAPTER 4 SOFTWARE SETUP 40

4.1 Flash an Image to the EAC-4000 40

4.2 Peripheral Interface Guide 42

APPENDIX A : Power Consumption 47

APPENDIX B : Supported Module List 50

1

GENERAL INTRODUCTION

1.1 Overview

Vecow EAC-4000 Series is a compact, Arm-based Edge AI computing system designed for entry-level AI applications at the edge. Powered by NVIDIA® Jetson Orin™ NX and Jetson Orin Nano system-on-modules, the platform features a 1024-core NVIDIA Ampere™ architecture GPU with 32 Tensor Cores and an 8-core Arm® Cortex®-A78AE CPU, delivering up to 100 TOPS of AI performance. The system is optimized for various edge AI workloads such as traffic vision, automated optical inspection (AOI), delivery robots, and other AI-powered embedded applications.

As the most compact model in Vecow's Arm-based Edge AI lineup, the EAC-4000 maintains industrial-grade reliability within a fanless, small-footprint enclosure. It offers a rich set of I/O interfaces, including : 1 GigE LAN ports, 4 USB 3.1 ports, 2 COM ports (RS-232/422/485), 1 Nano SIM card socket, and 2 antenna connectors for wireless communication. The platform supports wireless connectivity via Wi-Fi or 4G and provides an additional PCIe lane for NVMe SSD expansion, enabling enhanced storage flexibility.

Designed for deployment in harsh environments, the EAC-4000 supports a wide operating temperature range from -25°C to 55°C and operates on a 12V DC power input. Its compact size, robust connectivity, and reliable performance make it well-suited for edge AI deployments in industrial and vision-based applications.

1.2 Features

- NVIDIA Jetson Orin™ NX/Nano, up to 100 TOPS AI performance (Orin Nano, Orin NX Super Mode Supported)
- Up to 16GB LPDDR5 RAM, 1TB NVMe SSD
- 1 GigE LAN, 4 USB 3.1, 1 HDMI 2.0
- 2 COM RS-232/422/485
- 1 Full-size Mini PCIe with SIM for 4G/Wi-Fi/BT
- Optional Allxon OOB Support

1.3 Product Specification

1.3.1 Specifications of EAC-4000

System	
CPU	• XR16 : 8-core Arm® Cortex®-A78AE v8.2 64-bit CPU • XR08/AR08/AR04 : 6-core Arm® Cortex®-A78AE v8.2 64-bit CPU
GPU	• XR16/XR08/AR08 : NVIDIA Ampere™ architecture w/1024 NVIDIA® CUDA® cores, 32 Tensor cores • AR04 : NVIDIA Ampere™ architecture w/512 NVIDIA® CUDA® cores, 16 Tensor cores
DL Accelerator	• XR16 : 2 NVDLA Engines • XR08 : 1 NVDLA Engines • AR08/AR04 : None
Memory	• XR16 : 1 LPDDR5 DRAM, 16GB • XR08/AR08 : 1 LPDDR5 DRAM, 8GB • AR04 : 1 LPDDR5 DRAM, 4GB
Software Support	• Linux • NVIDIA JetPack SDK
I/O Interface	
USB	4 USB 3.1 Type A
Micro USB	1 Micro USB Flash Port
Button	• 1 Power Button • 1 Force Recovery Button • 1 Reset Button
LED	Power, SSD
SIM	1 Nano SIM Card Socket
Antenna	2 Antenna for WiFi/4G
Serial	2 COM RS-232/422/485
Expansion	
Mini PCIe	1 Mini PCIe (Full-size, PCIe, USB 2.0)
Graphics	
Video Encode	XR16/XR08 : • HEVC : 1x 4K @60, 3x 4K @30, 6x 1080p @60, 12x 1080p @30 • H.264 : 1x 4K @60, 2x 4k @30, 5x 1080p @60, 11x 1080p @30
Video Decode	XR16/XR08 : • HEVC : Up to 1x 8K @30, 2x 4K @60, 4x 4K @30, 9x 1080p @60, 18x 1080p @30 • H.264 : Up to 1x 4K @60, 2x 4K @30, 5x 1080p @60, 11x 1080p @30 AR08/AR04 : • HEVC : Up to 1x 4K @60, 2x 4K @30, 5x 1080p @60, 11x 1080p @30 • H.264 : Up to 1x 4K @30, 3x 1080p @60, 7x 1080p @30
Interface	1 HDMI 2.0, up to 4K@60

Ethernet	
LAN 1 to LAN 2	10/100/1000 Base-T Ethernet GigE LAN, RJ45 Connector (Optional X-coded M12 Connector)
Storage	
M.2	1 M.2 Key M Socket (2242, PCIe 4.0 x4)
Power	
Power Input	12V DC Power Input
Power Interface	3-pin 3.5mm Terminal Block V+, V-
Others	
OOB	Out-of-band mgmt by Nuvoton NUC980 (Optional, by Module)
TPM	Infineon SLB9673 supports TPM 2.0 (Optional)
Mechanical	
Dimensions	112 mm x 103 mm x 45 mm (4.41" x 4.06" x 1.77")
Weight	0.6 kg (1.32 lb)
Mounting	• Wallmount • DIN Rail (Optional)
Environment	
Operating Temperature	**15W TDP Mode :** -25°C to 55°C (-13°F to 131°F) **25W TDP Mode :** -25°C to 45°C (-13°F to 113°F) **40W TDP Mode :** -25°C to 45°C (-13°F to 113°F), with fansink
Storage Temperature	-40°C to 85°C (-40°F to 185°F)
Humidity	5% to 95% Humidity, non-condensing
Relative Humidity	95% @ 55°C
Shock	Operating, MIL-STD-810H, Method 516.8, Procedure I
Vibration	Operating, MIL-STD-810G, Method 514.6, Procedure I, Category 4
EMC	CE, FCC, EN50155, EN50121-3-2

1.3.2 Specifications of EAC-4000-OOB

System	
CPU	• XR16 : 8-core Arm® Cortex®-A78AE v8.2 64-bit CPU • XR08/AR08/AR04 : 6-core Arm® Cortex®-A78AE v8.2 64-bit CPU
GPU	• XR16/XR08/AR08 : NVIDIA Ampere™ architecture w/1024 NVIDIA® CUDA® cores, 32 Tensor cores • AR04 : NVIDIA Ampere™ architecture w/512 NVIDIA® CUDA® cores, 16 Tensor cores
DL Accelerator	• XR16 : 2 NVDLA Engines • XR08 : 1 NVDLA Engines • AR08/AR04 : None
Memory	• XR16 : 1 LPDDR5 DRAM, 16GB • XR08/AR08 : 1 LPDDR5 DRAM, 8GB • AR04 : 1 LPDDR5 DRAM, 4GB
Software Support	• Linux • NVIDIA JetPack SDK
I/O Interface	
USB	4 USB 3.1 Type A
Micro USB	1 Micro USB Flash Port
Button	• 1 Power Button • 1 Force Recovery Button • 1 Reset Button
LED	Power, SSD
SIM	1 Nano SIM Card Socket
Antenna	2 Antenna for WiFi/4G
Serial	2 COM RS-232/422/485
Expansion	
Mini PCIe	1 Mini PCIe (Full-size, PCIe, USB 2.0)
Graphics	
Video Encode	XR16/XR08 : • HEVC : 1x 4K @60, 3x 4K @30, 6x 1080p @60, 12x 1080p @30 • H.264 : 1x 4K @60, 2x 4k @30, 5x 1080p @60, 11x 1080p @30
Video Decode	XR16/XR08 : • HEVC : Up to 1x 8K @30, 2x 4K @60, 4x 4K @30, 9x 1080p @60, 18x 1080p @30 • H.264 : Up to 1x 4K @60, 2x 4K @30, 5x 1080p @60, 11x 1080p @30 AR08/AR04 : • HEVC : Up to 1x 4K @60, 2x 4K @30, 5x 1080p @60, 11x 1080p @30 • H.264 : Up to 1x 4K @30, 3x 1080p @60, 7x 1080p @30
Interface	1 HDMI 2.0, up to 4K@60

Ethernet	
LAN 1 to LAN 2	10/100/1000 Base-T Ethernet GigE LAN, RJ45 Connector (Optional X-coded M12 Connector)
Storage	
M.2	1 M.2 Key M Socket (2242, PCIe 4.0 x4)
Power	
Power Input	12V DC Power Input
Power Interface	3-pin 3.5mm Terminal Block V+, V-
Power	
MCU	Nuvoton NUC980
Interface	• 1 10/100Mb Ethernet LAN, RJ45 Connector • 1 Full-Size Mini PCIe Socket (USB) • 1 Nano SIM
Remote Management	Support Remote Power ON/OFF, Reset and Power Cycling, Cloud Serial Console. Powered By Allxon.
Others	
OOB	Out-of-band mgmt by Nuvoton NUC980 (Optional, by Module)
TPM	Infineon SLB9673 supports TPM 2.0 (Optional)
Mechanical	
Dimensions	112 mm x 103 mm x 66 mm (4.41" x 4.06" x 2.60")
Weight	0.8 kg (1.76 lb)
Mounting	• Wallmount • DIN Rail (Optional)
Environment	
Operating Temperature	**15W TDP Mode :** -25°C to 55°C (-13°F to 131°F) **25W TDP Mode :** -25°C to 45°C (-13°F to 113°F) **40W TDP Mode :** -25°C to 45°C (-13°F to 113°F), with fansink
Storage Temperature	-40°C to 85°C (-40°F to 185°F)
Humidity	5% to 95% Humidity, non-condensing
Relative Humidity	95% @ 55°C
Shock	Operating, MIL-STD-810H, Method 516.8, Procedure I
Vibration	Operating, MIL-STD-810G, Method 514.6, Procedure I, Category 4
EMC	CE, FCC, EN50155, EN50121-3-2

1.4 Mechanical Dimension

1.4.1 Dimensions of EAC-4000

Unit : mm (inch)

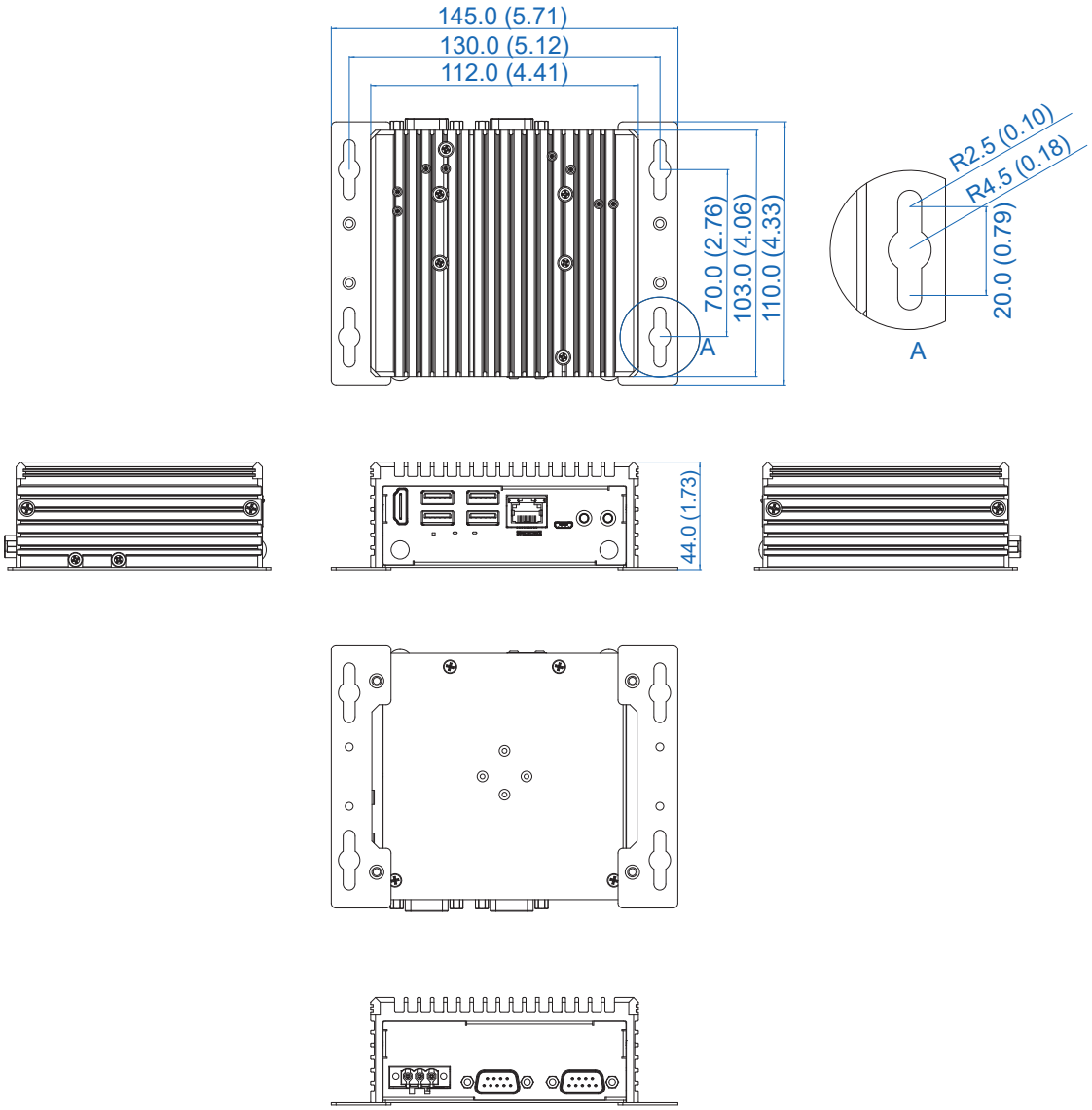

1.4.2 Dimensions of EAC-4000-OOB

Unit : mm (inch)

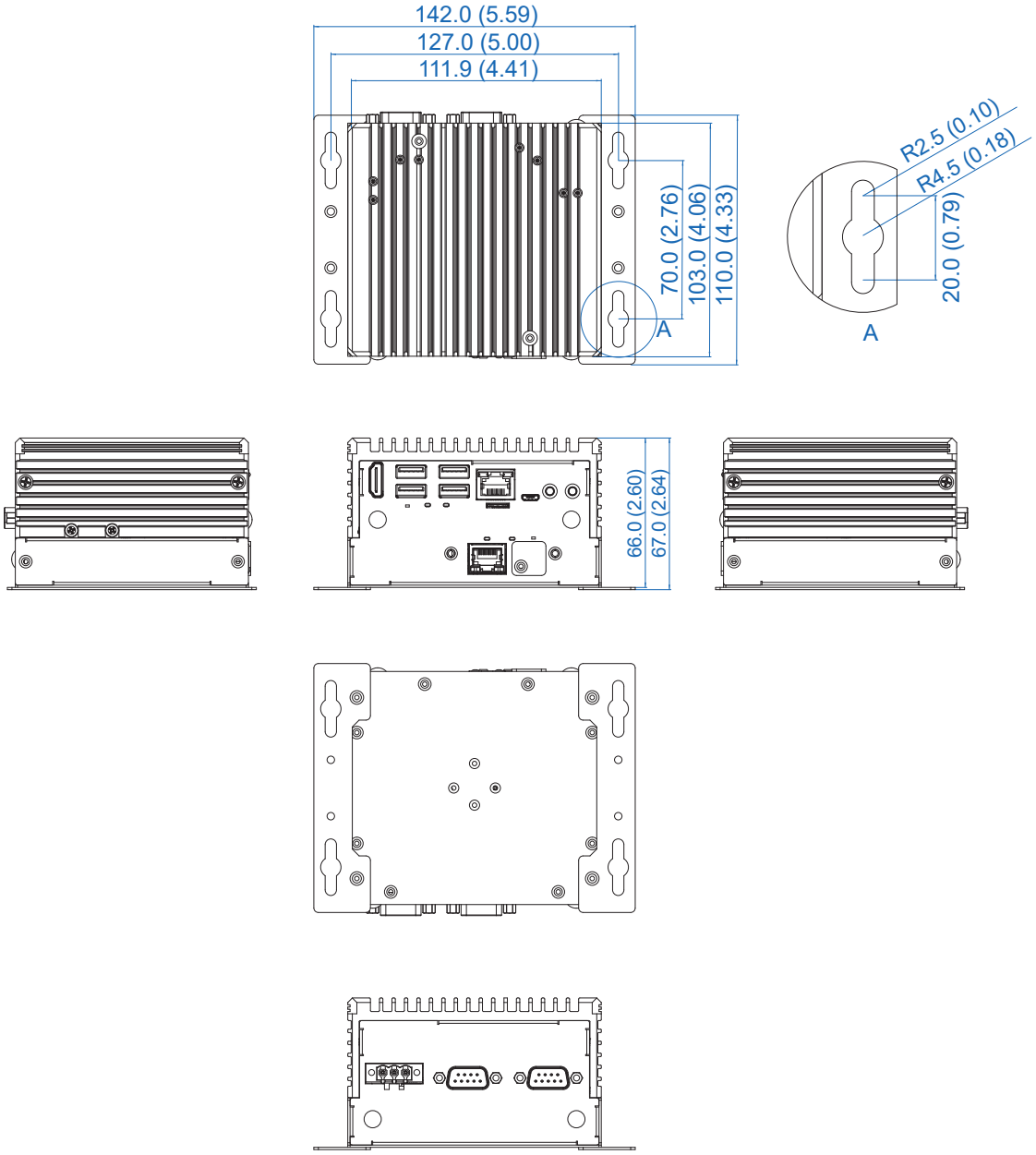

1.4.3 Dimensions of EAC-4000F

Unit : mm (inch)

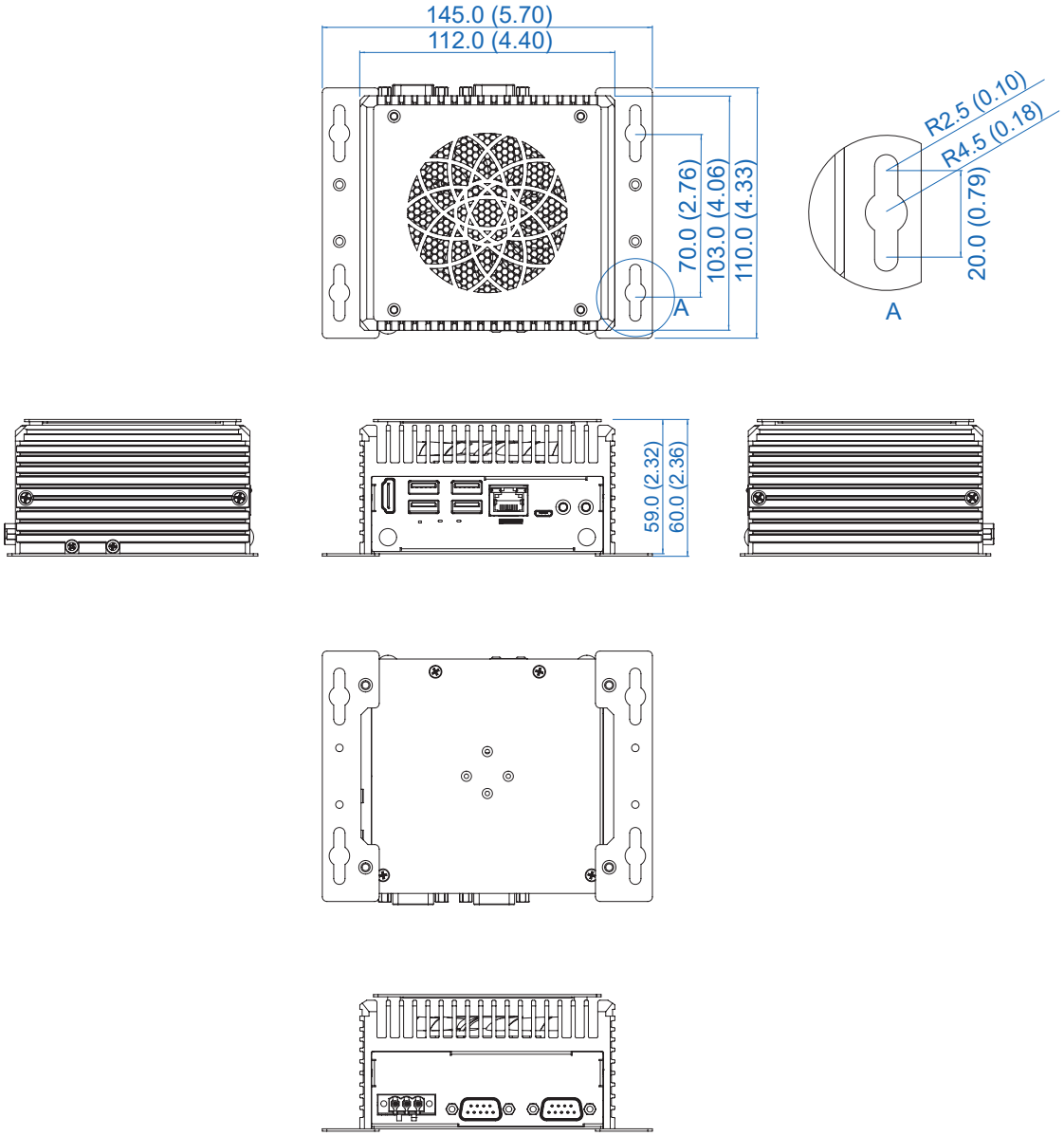

2

GETTING TO KNOW YOUR EAC-4000

2.1 Packing List

Item	Description	Qty
1	EAC-4000 Edge AI Computing System (According to the configuration of your order, EAC-4000 series may contain M.2 modules. Please verify these items if necessary.)	1

Item	Description	Outlook	Usage	P/N	Qty
1	Terminal block 3-pin (5.0mm)		DC-IN	51-2411R03-S1B	1
2	M3_I Head_Phillips_ L=4.0 mm_Ni _Nylok		M.2	53-M006400-010	1
3	PHILLPIS M2.5x6L, Ni		MiniPCIe	53-2426906-30B	1
4	Flat head_ M3x4L_ Ni_Nylok		Fasten wall mount bracket to EAC-4000	53-M006350-010	4
5	Wall-mounting bracket		Mount	62-03P0929-0BA	2
6	Foot Pad		Foot Pad	53-4000042-303	4

2.2 Front Panel I/O & Functions

2.2.1 Functions of EAC-4000 series

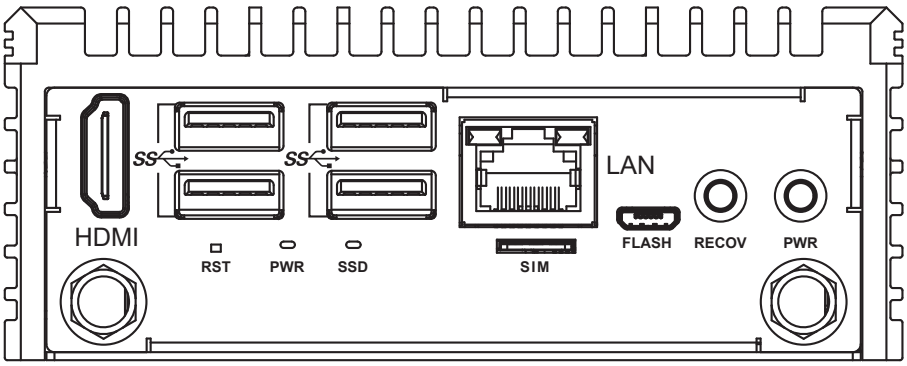

In the Vecow EAC-4000 series, most of the I/O connectors are located on the front panel. General connections to computer devices, such as HDMI, USB 3.0, LAN (RJ-45), flash port (Micro USB), recovery button, power button, reset button, SIM slot, and power and HDD LED indicators, are all placed on the front panel.

2.2.1.1 HDMI

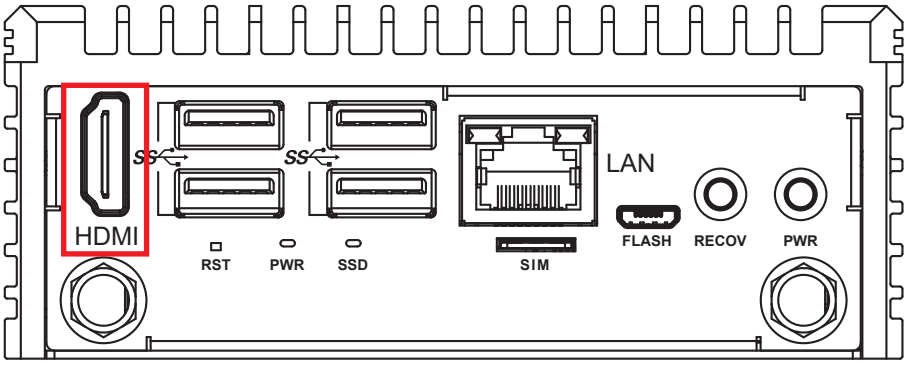

The HDMI display provides a method for transferring video and audio data over a TMDS-compatible physical link to an audio/visual display device. The HDMI port supports the HDMI 2.1 interface and resolutions up to 3840 x 2160 @ 60Hz.

2.2.1.2 Quad port USB 3.2 connector

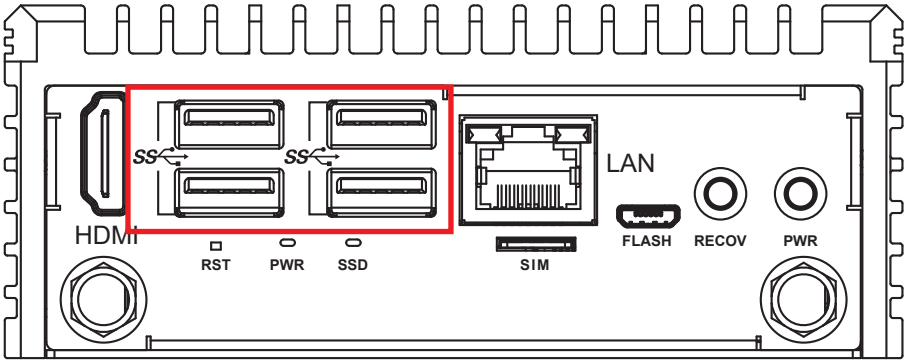

There are four USB 3.1 connectors available on the EAC-4000, supporting data transfer rates of up to 5 Gbps. They are also compliant with the requirements for SuperSpeed (SS), High Speed (HS), Full Speed (FS), and Low Speed (LS).

2.2.1.3 Ethernet port

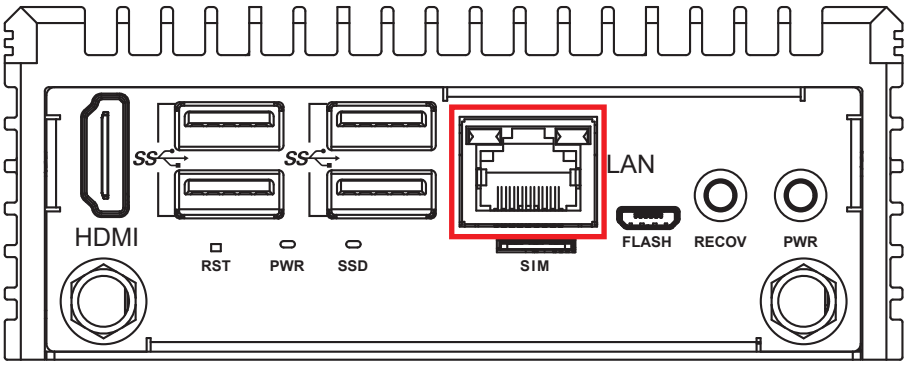

There is an 8-pin RJ-45 jack on the front panel of the EAC-4000 series, supporting 10/100/1000Mbps Ethernet connections. It supports 1000BASE-T gigabit data signals over standard Ethernet Cat 5 or Cat 6 cables.

Using a suitable RJ-45 cable, you can connect the system to a computer or to any other device with an Ethernet connection, such as a hub or a switch.

The LAN pinouts are listed as follows :

Pin No.	10/100Mbps	1000Mbps
1	E_TX+	MDI0_P
2	E_TX-	MDI0_N
3	E_RX+	MDI1_P
4	------	MDI2_P
5	------	MDI2_N
6	E_RX-	MDI1_N
7	------	MDI3_P
8	------	MDI3_N

Each LAN port uses a standard RJ-45 connector with LED indicators to display the activity, link, and speed status of the connection.

The speed LED uses only one color for both 100 Mbps and 1000 Mbps connections, as shown in the table below.

LED Location	LED Color	10Mbps	100Mbps	1000Mbps
Right	Green	Off	Solid Green	Solid Green
Left	Yellow	Twinkling Yellow	Twinkling Yellow	Twinkling Yellow

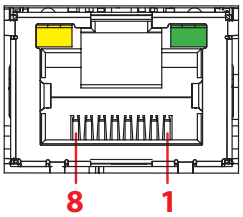

2.2.1.4 Flash port

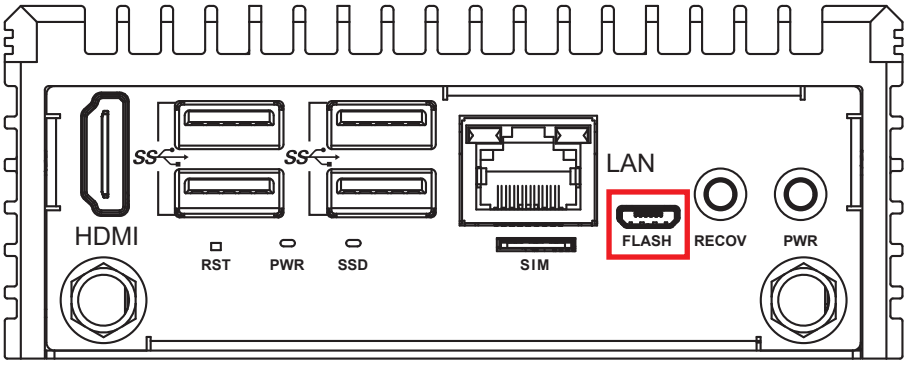

The EAC-4000 USB Recovery Mode provides an alternative boot device (USB). In this mode, the system is connected to a host computer and boots via USB. This mode is used when a new image needs to be flashed. USB0 must be available to function as the USB device for USB Recovery Mode.

Pin No.	Definition
1	VBUS_DET
2	USB_DATA-
3	USB_DATA+
4	NC
5	GND

2.2.1.5 Force recovery button

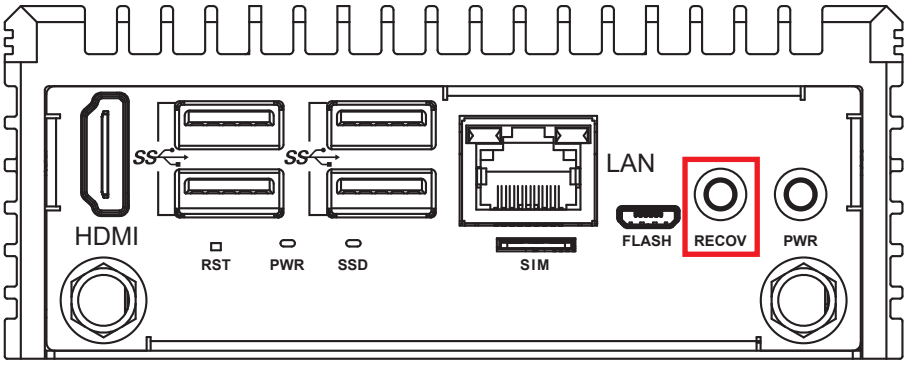

To enter Force Recovery Mode, press and hold the Recovery button.

While holding the Recovery button, either power on the system or press and release the Reset button.

2.2.1.6 Power button

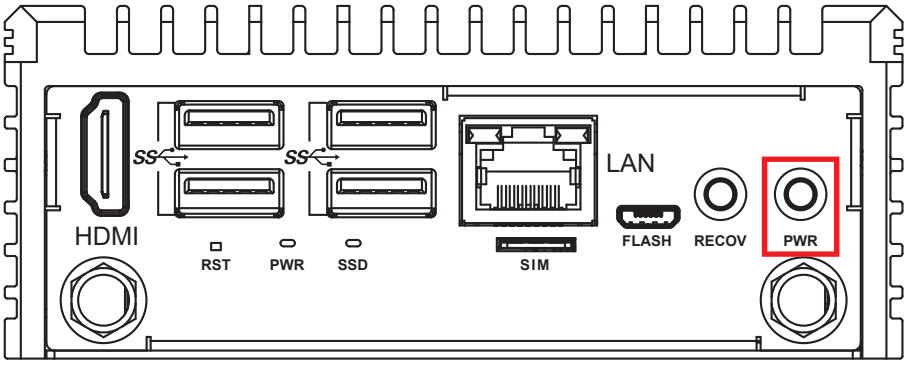

The power button is a non-latching switch.

2.2.1.7 Reset button

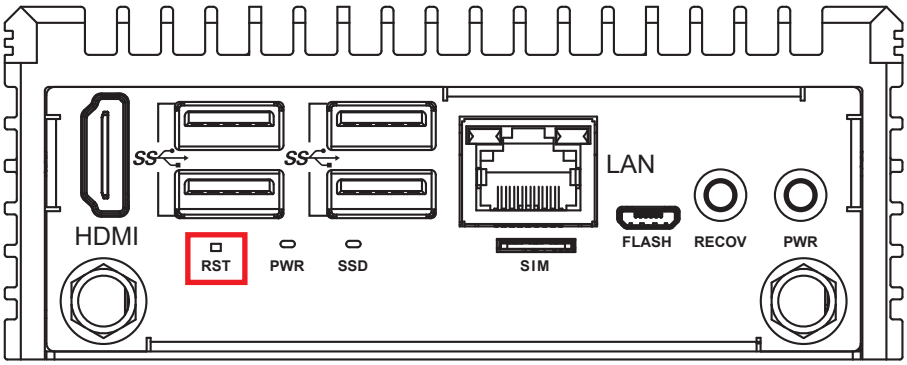

If the system encountered an error or becomes unresponsive, press the Reset button to restart the system. The operating system will then reboot.

2.2.1.8 SSD & Power LED Indicators

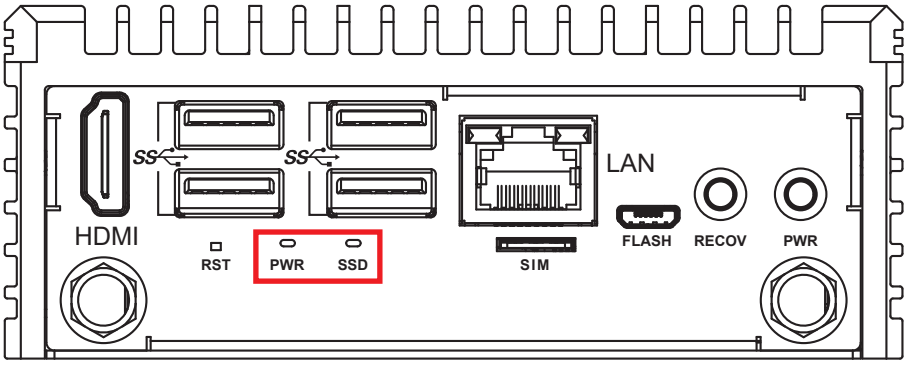

The PWR LED lights up when the system is powered on and ready.
The SSD LED indicates storage activity.

2.2.1.9 Nano SIM

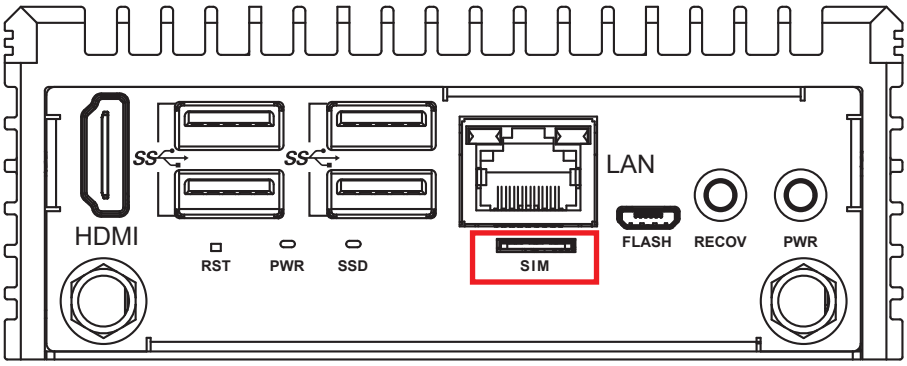

The external Nano SIM card enables wireless communication for the system when used with a mini PCIe 4G card.

2.2.1.10 OOB States LED indicator

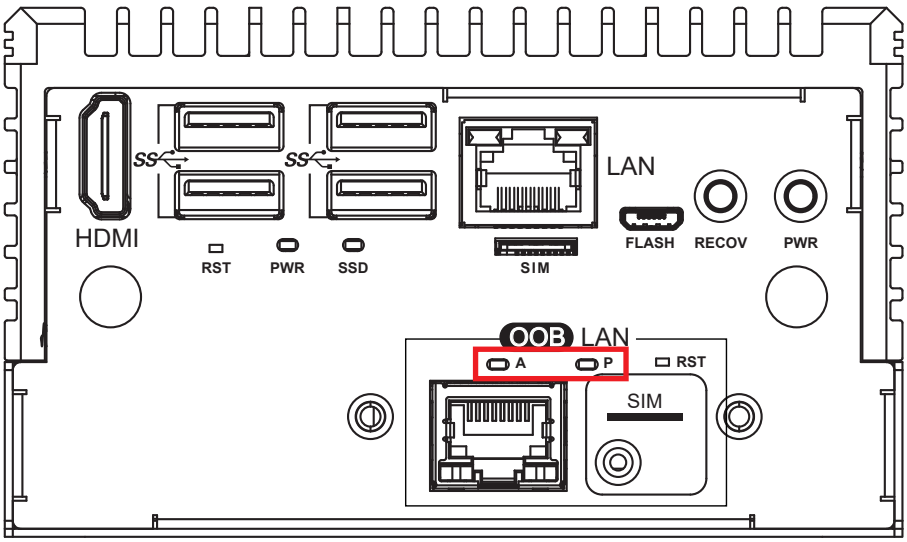

The LED indicator can instantly judge the power status of OOB Enabler and the connection status of OOB Enabler and Allxon Portal. If both LEDs are on, it means OOB Enabler is running and the connection to Allxon Cloud is stable.

2.2.1.11 OOB LAN Connector

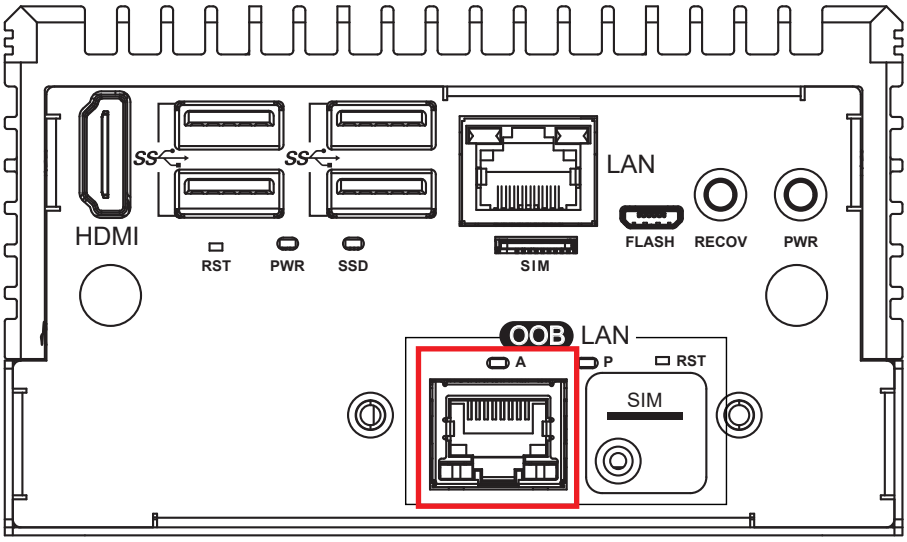

There are 8-pin RJ-45 port supporting 10/100 Mbps Ethernet connections in the OOB-100.

The pin assignment of CN6 is listed in the following table:

Pin No.	10/100 Mbps	Pin No.	10/100 Mbps
1	E_TX+	5	-----
2	E_TX-	6	E_RX-
3	E_RX+	7	-----
4	-----	8	-----

Each LAN port is supported by a standard RJ-45 connector with LED indicators to present active/link/speed status of the connection. The LED indicator on the lower left corner lightens in solid yellow when the cable is properly connected to a 10/100Mbps Ethernet network; The LED on the lower right corner will keep twinkling/off when 100Mbps Ethernet data packets are being transmitted/received.

LED Location	LED Color	10 Mbps	100 Mbps
Right	Green	None	Twinkling green
Left	Yellow	Solid yellow	Solid yellow

2.2.1.12 OOB Nano SIM Cards

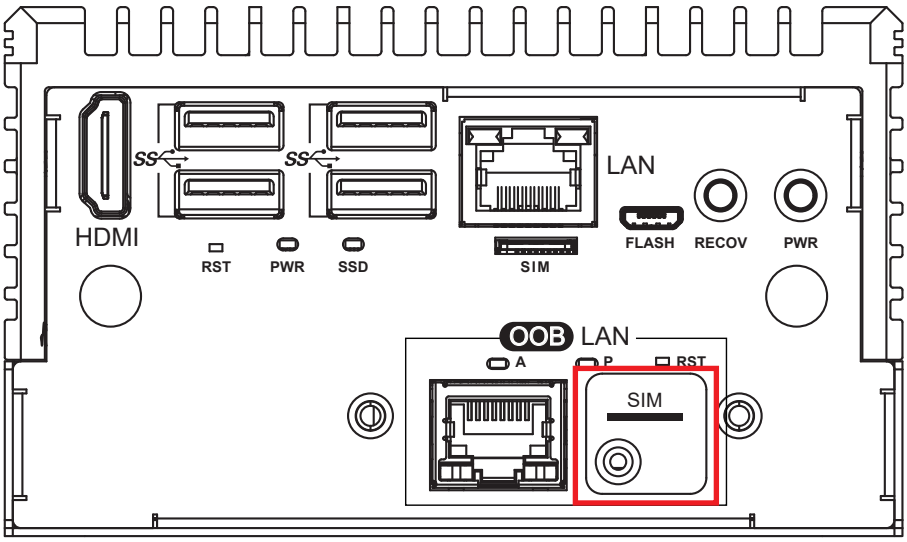

There are external Nano SIM card are assigned for mini PCIe slot respectively offer wireless communication capability to the system.

The SIM card sockets do not support hot-plug. Please make sure to unplug the system power before inserting the SIM card(s). If you want to support hot-plug, you need to set the SW4 to SIM card detection function.

2.3 Rear Panel I/O & Functions

2.3.1 Functions of EAC-4000 series

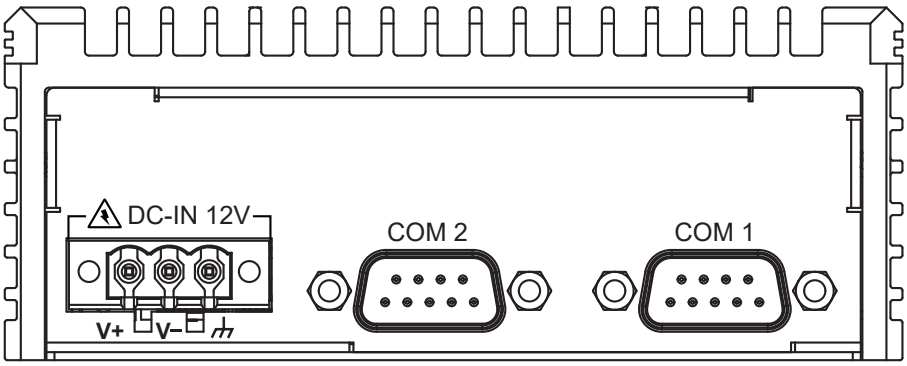

In the Vecow EAC-4000 Series, most of the I/O connectors are located on the front panel. The rear panel has only three I/O connectors, including the power terminal block and the COM ports.

2.3.1.1 Power terminal block

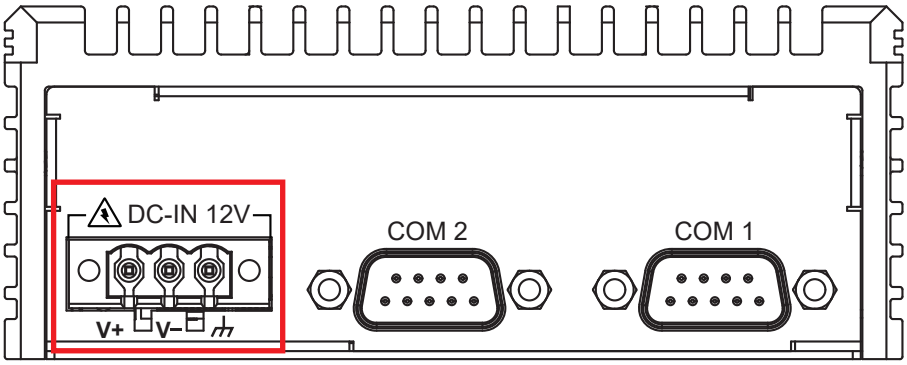

The EAC-4000 supports 12V DC power input via a terminal block.

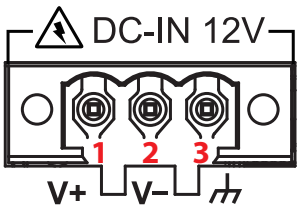

Pin No.	Definition
1	V+
2	V-
3	Chassis Ground

2.3.1.2 COM Port

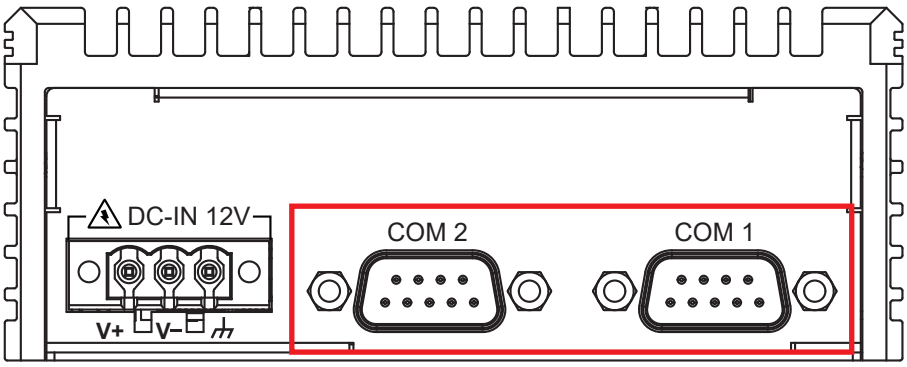

COM1 and COM2 can be configured for RS-232, RS-422, or RS-485 communication with automatic flow control. By default, COM1 and COM2 are set to RS-232 mode. To use RS-422 or RS-485, you must configure the ports through GPIO.

The pin assignments for the rear D-SUB connector are listed in the following table :

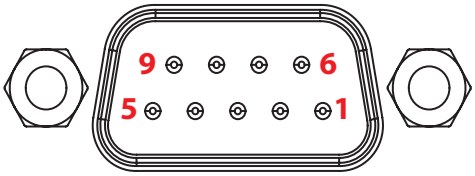

Serial Port	Pin No.	RS-232	RS-422 (5-wire)	RS-485 (3-wire)
COM1 COM2	1	----------	TXD-	DATA-
	2	RXD	TXD+	DATA+
	3	TXD	RXD+	----------
	4	----------	RXD-	----------
	5	GND	GND	GND
	6	----------	----------	----------
	7	RTS	----------	----------
	8	CTS	----------	----------
	9	----------	----------	----------

2.4 Main Board Expansion Connectors

2.4.1 TOP View of MB

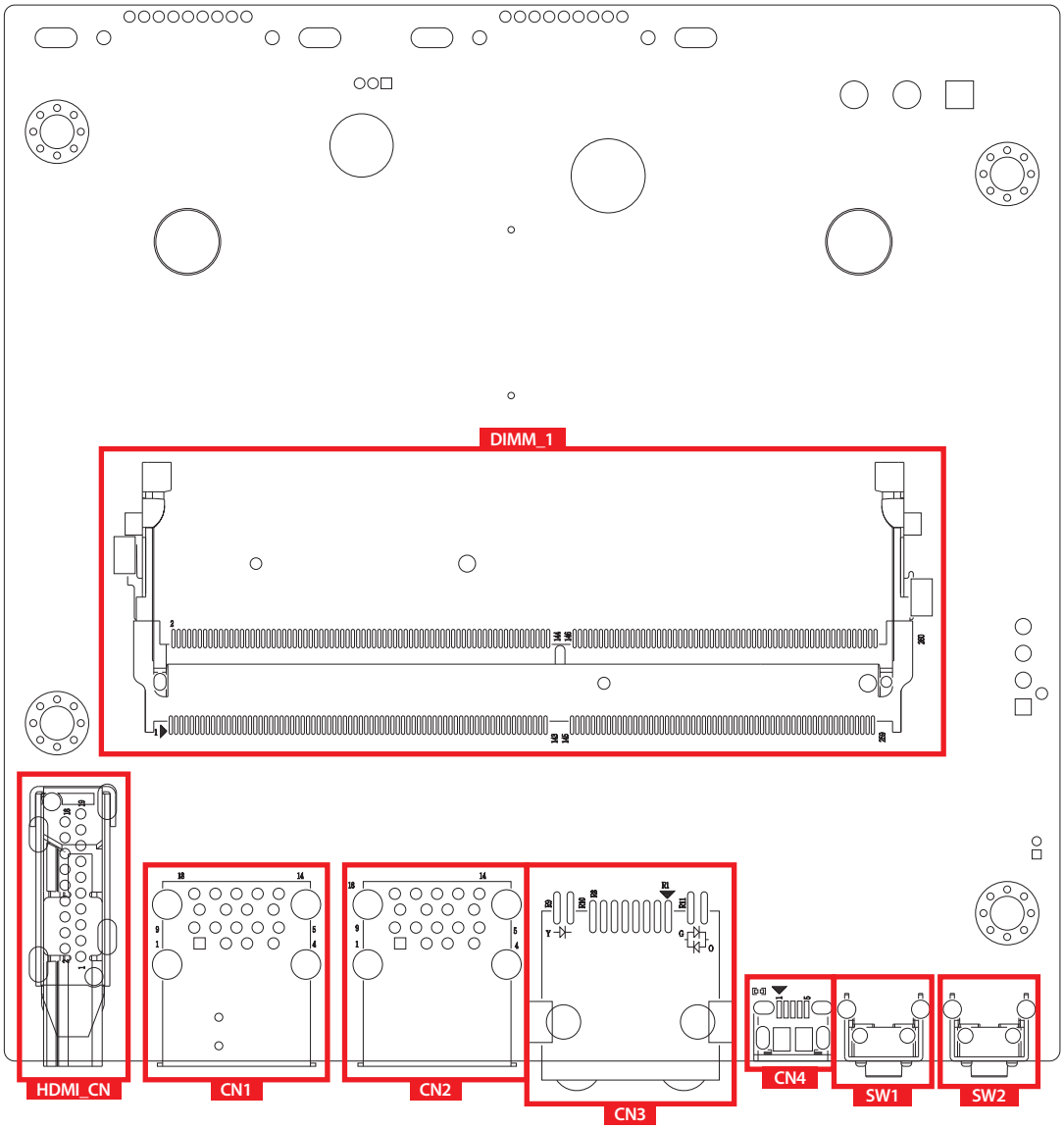

2.4.2 BOT View of MB

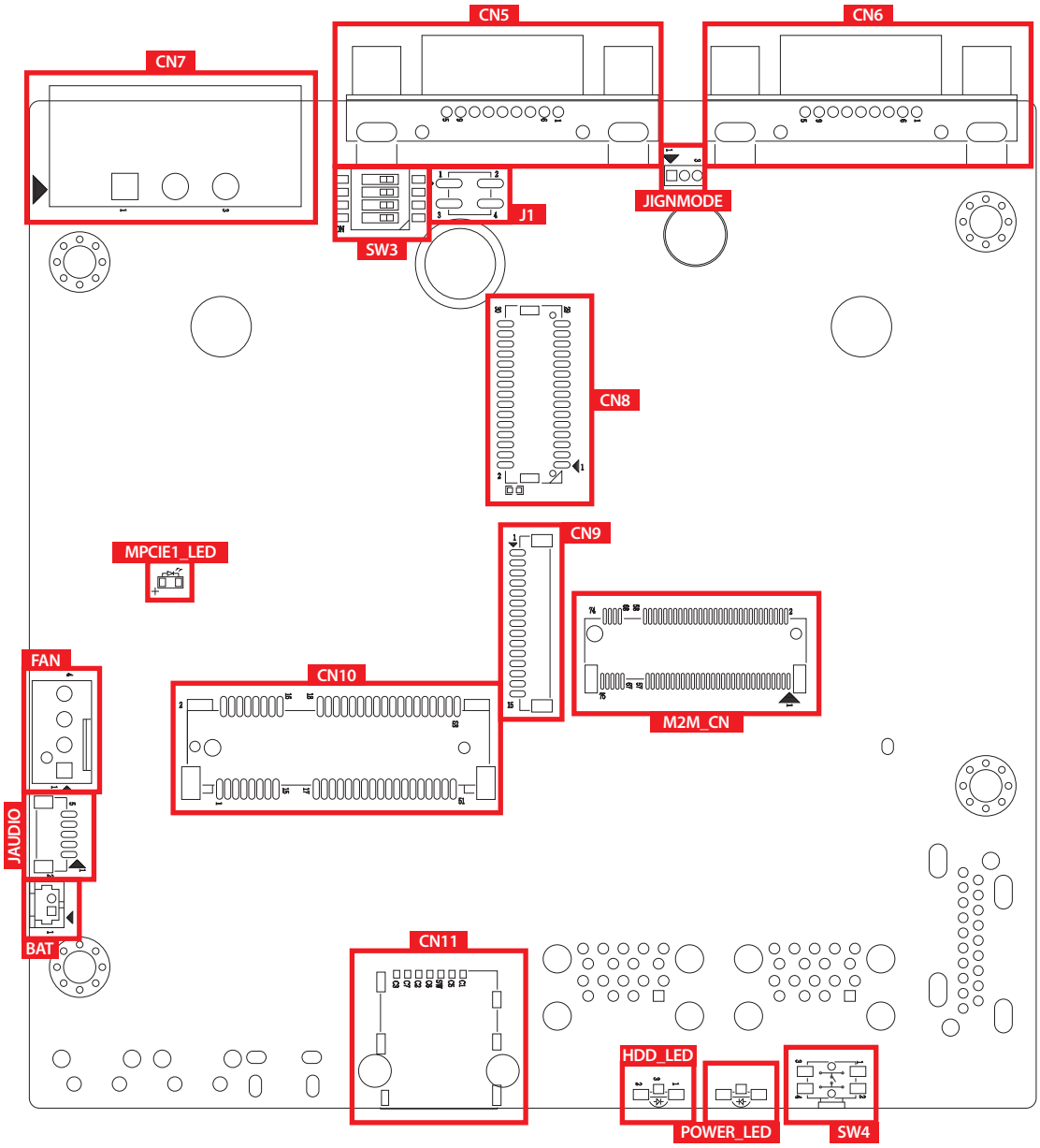

2.4.2.1 BAT : RTC Battery

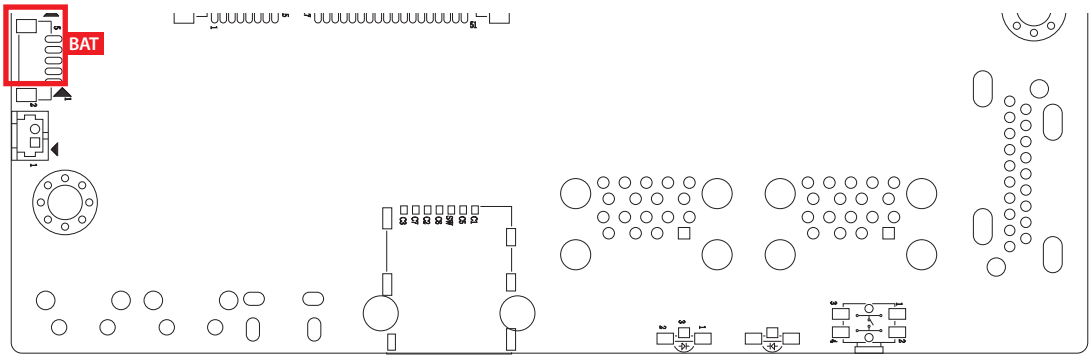

The BAT connector is connected to a CR2032 battery with a cable to supply power to the RTC IC. If the battery is disconnected, the RTC function will not work, and the operating system time will be incorrect.

Pin No.	Definition	Pin No.	Definition
1	VRTC	2	GND

2.4.2.2 CN8 : Reserved peripheral I/O header

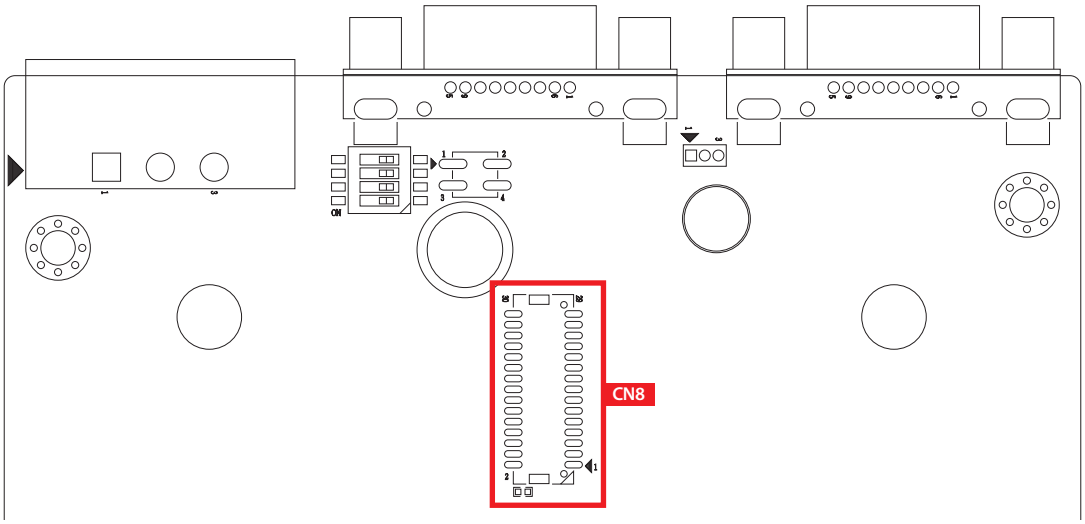

The CN8 connector provides debug UART, I2C, 4-wire UART, SPI, 7-bit GPIO, CAN bus, and ignition remote control functions. All signals operate at a 3.3V voltage level.

The pin assignments for CN8 are listed in the following table :

Pin No.	Definition	Pin No.	Definition
1	DEBUG_TX	2	+3.3V
3	DEBUG_RX	4	RSV_GPIO_PI00
5	GND	6	RSV_GPIO_PI01
7	I2C1_SCL	8	RSV_GPIO_PI02
9	I2C1_SDA	10	RSV_GPIO_PH03
11	GND	12	RSV_GPIO_PQ05
13	UART1_TXD	14	RSV_GPIO_PP06
15	UART1_RXD	16	RSV_GPIO_P05
17	UART1_RTS	18	GND
19	UART1_CTS	20	CAN_H
21	GND	22	CAN_L
23	SPI1_SCK	24	GND
25	SPI1_MISO	26	IGNITION
27	SPI1_MOSI	28	REMOTE CONTROL
29	SPI1_CS	30	GND_VPS

2.4.2.3 CN9 : OOB connector

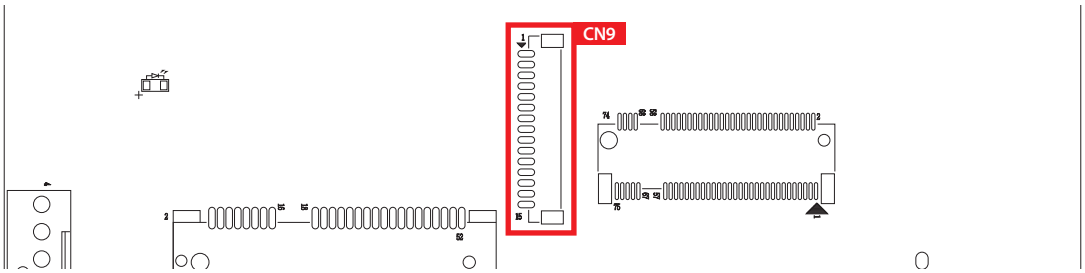

The connector is linked to the OOB daughter board, which enables remote control of system functions (such as power on, reset, or monitoring).

Pin No.	Definition	Pin No.	Definition
1	+5V	2	+5V
3	GND	4	RESERVED
5	RESERVED	6	GND
7	UART1_RX	8	UART1_TX
9	GND	10	RESERVED
11	RESERVED	12	GND
13	REMOTE_PWR_SW	14	REMOTE_RESET
15	PWR_DET		

2.4.2.4 CN10 : Mini PCIe slot

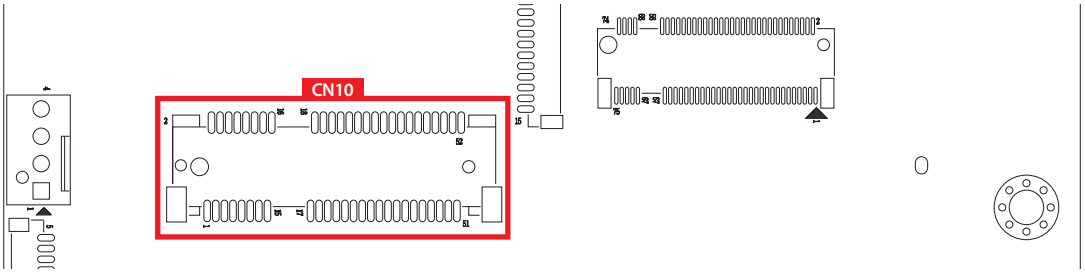

The EAC-4000 includes a Mini PCIe slot that supports PCIe signals.

The pin assignments for the Mini PCIe slot are listed in the following table :

Pin No.	Definition	Pin No.	Definition
51	NC	52	+3.3V
49	NC	50	GND
47	NC	48	+1.5V
45	NC	46	LED_WPAN
43	GND	44	LED_WLAN
41	+3.3V	42	LED_WWAN
39	+3.3V	40	GND
37	GND	38	USB_D+
35	GND	36	USB_D-
33	PETp0	34	GND
31	PETn0	32	RESERVED
29	GND	30	RESERVED
27	GND	28	+1.5V
25	PERp0	26	GND
23	PERn0	24	+3.3V
21	GND	22	PERST#
19	NC	20	W_DISABLE
17	NC	18	GND
Mechanical Key			
15	GND	16	UIM_VPP
13	REFCLK+	14	UIM_RESET
11	REFCLK-	12	UIM_CLK
9	GND	10	UIM_DATA
7	CLKREQ#	8	UIM_PWR
5	NC	6	+1.5V
3	NC	4	GND
1	WAKE#	2	+3.3V

2.4.2.5 DIMM_1 : Jetson Orin module connector

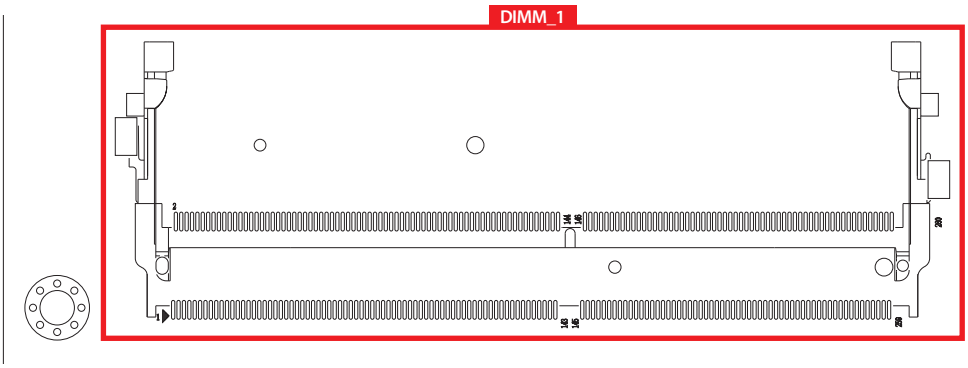

The EAC-4000 includes a Mini PCIe slot that supports PCIe signals.

The pin assignments for the Mini PCIe slot are listed in the following table :

No.	Definition	No.	Definition	No.	Definition	No.	Definition
1	GND	66	NC	131	PCIE0_RX0_N	196	GBE_MDI2_N
2	GND	67	GND	132	GND	197	GPIO3_PI02
3	NC	68	GND	133	PCIE0_RX0_P	198	GBE_MDI2_P
4	NC	69	HDMI _TXD1_N	134	PCIE0_TX0_N	199	GPIO3_PH07
5	NC	70	NC	135	GND	200	GND
6	NC	71	HDMI _TXD1_P	136	PCIE0_TX0_P	201	GND
7	GND	72	NC	137	PCIE0_RX1_N	202	GBE_MDI3_N
8	GND	73	GND	138	GND	203	UART1_TXD
9	NC	74	GND	139	PCIE0_RX1_P	204	GBE_MDI3_P
10	NC	75	HDMI _TXD0_N	140	PCIE0_TX1_N	205	UART1_RXD
11	NC	76	NC	141	GND	206	COM2_INTR_ EN
12	NC	77	HDMI _TXD0_P	142	PCIE0_TX1_P	207	UART1_RTS*
13	GND	78	NC	143	CAN_RX	208	FAN_TACH
14	GND	79	GND	144	GND	209	UART1_CTS*
15	NC	80	GND	145	CAN_TX	210	CLK_32K_OUT
16	NC	81	HDMI _TXC_N	146	GND	211	AUD_MCLK
17	NC	82	NC	147	GND	212	GPIO10
18	NC	83	HDMI _TXC_P	148	PCIE0_TX2_N	213	NC
19	GND	84	NC	149	PCIE0_RX2_N	214	FORCE_ RECOVERY*
20	GND	85	GND	150	PCIE0_TX2_P	215	NC
21	NC	86	GND	151	PCIE0_RX2_P	216	GPIO3_PQ06
22	NC	87	USB_REC_ DET	152	GND	217	MODULE_ID
23	NC	88	NC	153	GND	218	GPIO12
24	NC	89	SLEW_1	154	PCIE0_TX3_N	219	NC
25	GND	90	NC	155	PCIE0_RX3_N	220	I2S1_DOUT
26	GND	91	COM1_MODE0	156	PCIE0_TX3_P	221	NC
27	NC	92	NC	157	PCIE0_RX3_P	222	I2S1_DIN
28	NC	93	COM1_MODE1	158	GND	223	NC
29	NC	94	HDMI_CEC	159	GND	224	I2S1_LRCK
30	NC	95	COM1_MODE2	160	PCIE0_CLK_N	225	NC

No.	Definition	No.	Definition	No.	Definition	No.	Definition
31	GND	96	HDMI_HPD	161	USBSS0_RX_N	226	I2S1_SCLK
32	GND	97	COM1_INTR_ EN	162	PCIE0_CLK_P	227	NC
33	NC	98	HDMI_DDC_ SDA	163	USBSS0_RX_P	228	GPIO3_PH00
34	NC	99	UART0_TXD	164	GND	229	NC
35	NC	100	HDMI_DDC_ SCL	165	GND	230	FAN_PWM
36	NC	101	UART0_RXD	166	USBSS0_TX_N	231	GND
37	GND	102	GND	167	PCIE1_RX0_N	232	I2C2_SCL
38	GND	103	UART0_RTS*	168	USBSS0_TX_P	233	SHUTDOWN_ REQ*
39	NC	104	SPI1_MOSI	169	PCIE1_RX0_P	234	I2C2_SDA
40	NC	105	UART0_CTS*	170	GND	235	PMIC_BBAT
41	NC	106	SPI1_SCK	171	GND	236	(DEBUG) UART2_TXD
42	NC	107	GND	172	PCIE1_TX0_N	237	POWER_EN
43	GND	108	SPI1_MISO	173	PCIE1_CLK_N	238	(DEBUG) UART2_RXD
44	GND	109	USB0_D_N	174	PCIE1_TX0_P	239	SYS_RESET*
45	NC	110	SPI1_CS0*	175	PCIE1_CLK_P	240	SLEEP/WAKE*
46	NC	111	USB0_D_P	176	GND	241	GND
47	NC	112	USBHUB_ RST_SOM	177	GND	242	GND
48	NC	113	GND	178	MOD_SLEEP*	243	GND
49	GND	114	SLEW_2	179	PCIE_WAKE*	244	GND
50	GND	115	USB1_D_N	180	PCIE0_ CLKREQ*	245	GND
51	USBSS2_RX_N	116	COM2_MODE0	181	PCIE0_RST*	246	GND
52	NC	117	USB1_D_P	182	PCIE1_ CLKREQ*	247	GND
53	USBSS2_RX_P	118	GPIO3_PQ05	183	PCIE1_RST*	248	GND
54	NC	119	GND	184	GBE_MDI0_N	249	GND
55	GND	120	COM2_MODE1	185	I2C0_SCL	250	GND
56	GND	121	USB2_D_N	186	GBE_MDI0_P	251	VCC5
57	USBSS2_TX_N	122	COM2_MODE2	187	I2C0_SDA	252	VCC5
58	NC	123	USB2_D_P	188	GBE_LED_ LINK	253	VCC5
59	USBSS2_TX_P	124	GPIO3_PP06	189	I2C1_SCL	254	VCC5
60	NC	125	GND	190	GBE_MDI1_N	255	VCC5
61	GND	126	GPIO3_PCC00	191	I2C1_SDA	256	VCC5
62	GND	127	GPIO04	192	GBE_MDI1_P	257	VCC5
63	HDMI_TXD2_N	128	W_DISABLE1_ CTRL	193	GPIO3_PI00	258	VCC5
64	NC	129	GND	194	GBE_LED_ACT	259	VCC5
65	HDMI _TXD2_P	130	GPIO06	195	GPIO3_PI01	260	VCC5

2.4.2.6 FAN : Fan Connector

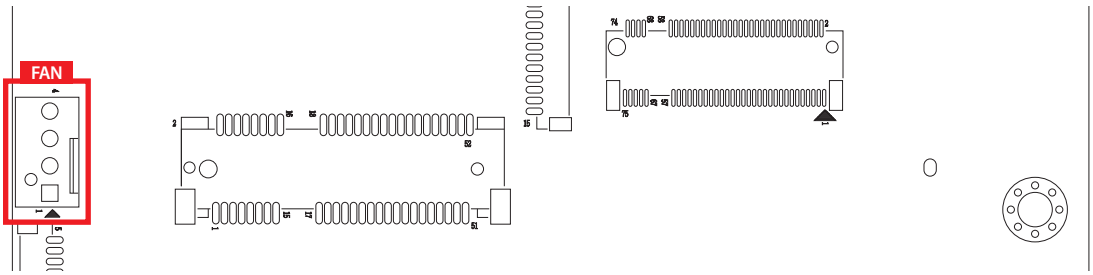

The FAN header supports additional thermal requirements.

The pin assignments for the FAN header are listed in the following table :

Pin No.	Definition	Pin No.	Definition
1	GND	2	+12V
3	FAN_TAC	4	FAN PWM

2.4.2.7 J1 : Ignition firmware burning

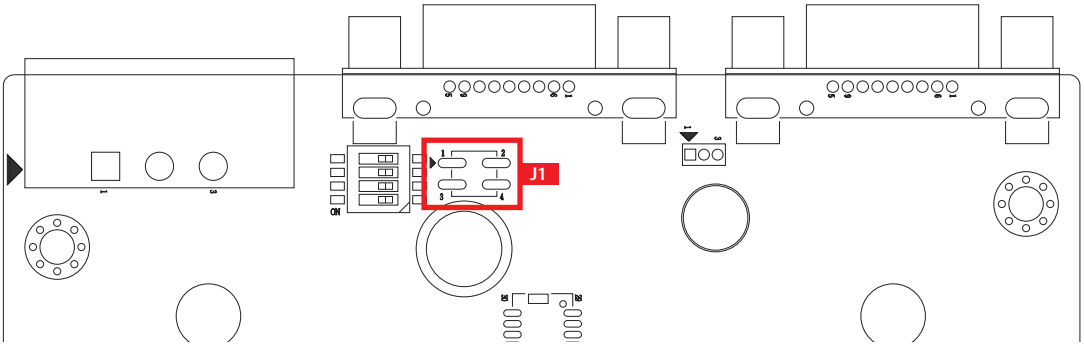

There is a Spy-Bi-Wire interface for ignition firmware burning.

The pin assignments for J1 are listed in the following table :

Pin No.	Definition	Pin No.	Definition
1	GND	2	MCU_RST
3	+3.3V	4	MCU_PRG

2.4.2.8 JAUDIO : Mic-in and Line-out Connector

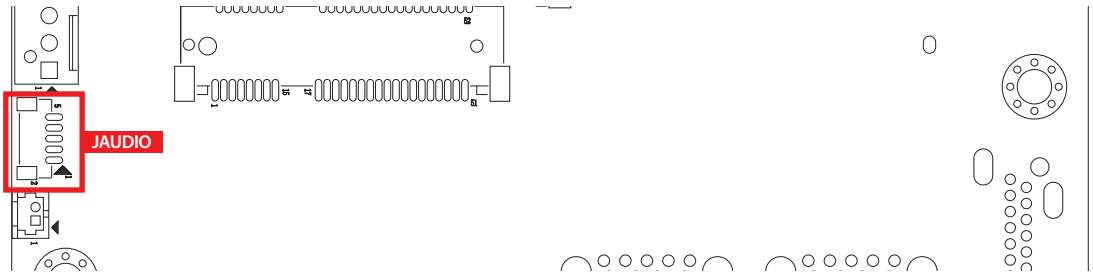

The connector is connected using an audio jack cable for line-out and mic-in applications.

The pin assignments for JAUDIO are listed in the following table :

Pin No.	Definition	Pin No.	Definition
1	LINE-OUT_L	2	LINE-OUT_R
3	GND	4	MIC-IN_L
5	MIC-IN_R		

2.4.2.9 JIGNMODE : Ignition mode setting

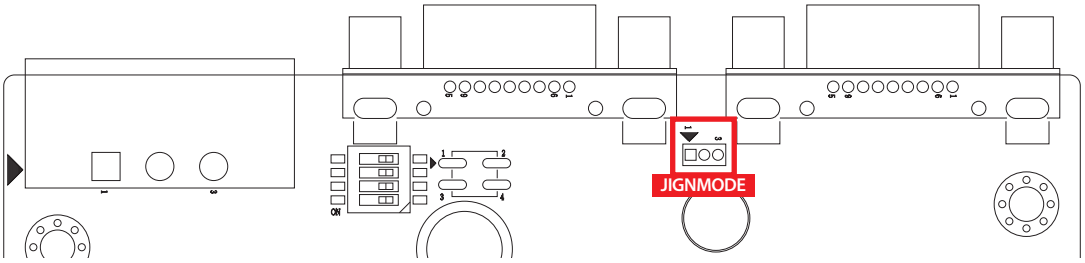

JIGNMODE Pin define :

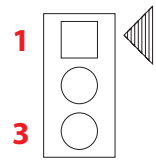

Pin No.	Definition
1	MODESEL_PU
2	HW_SW_MODE_SEL
3	MODESEL_PD

JIGNMODE Jumper setting :

Jumper pin	Ignition power mode
*1-2	H/W Mode (Default)
2-3	S/W Mode

2.4.2.10 M2M_CN : M.2 Key M Slot

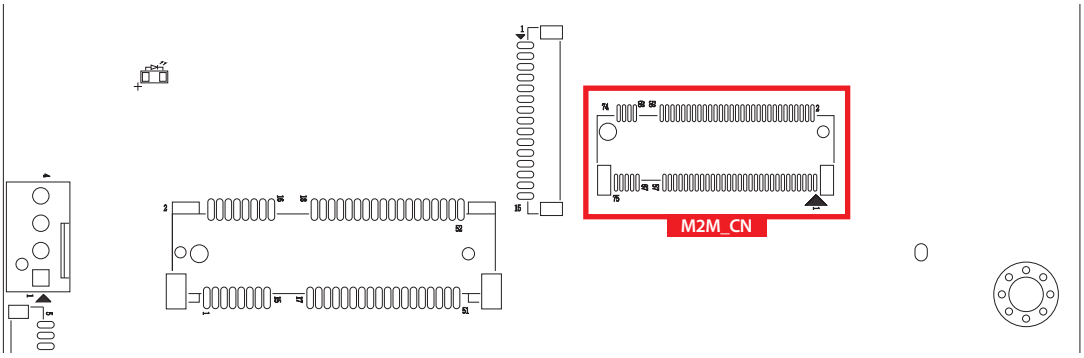

The M.2 Key M connector is suitable for applications that use host interfaces supporting PCIe Gen 4 x4. It can accommodate an NVMe module card of the 2242 type.

The pin assignments for M2M_CN are listed in the following table :

No.	Definition	No.	Definition	No.	Definition	No.	Definition
1	GND	18	+3.3V	35	PETn1	52	CLKREQ#
2	+3.3V	19	PERp2	36	NC	53	REFCLKn
3	GND	20	NC	37	PETp1	54	PEWAKE#
4	+3.3V	21	GND	38	Reserved	55	REFCLKp
5	PERn3	22	NC	39	GND	56	NC
6	NC	23	PETn2	40	I2C_CLK	57	GND
7	PERp3	24	NC	41	PERn0	58	NC
8	NC	25	PETp2	42	I2C_DATA	Mechanical Key	
9	GND	26	NC	43	PERp0	67	NC
10	LED	27	GND	44	ALERT#	68	SUSCLK
11	PETn3	28	NC	45	GND	69	NC
12	+3.3V	29	PERn1	46	NC	70	+3.3V
13	PETp3	30	NC	47	PETn0	71	GND
14	+3.3V	31	PERp1	48	NC	72	+3.3V
15	GND	32	NC	49	PETp0	73	GND
16	+3.3V	33	GND	50	PERST#	74	+3.3V
17	PERn2	34	NC	51	GND	75	GND

2.4.2.11 MPCIE1_LED : LED indicator

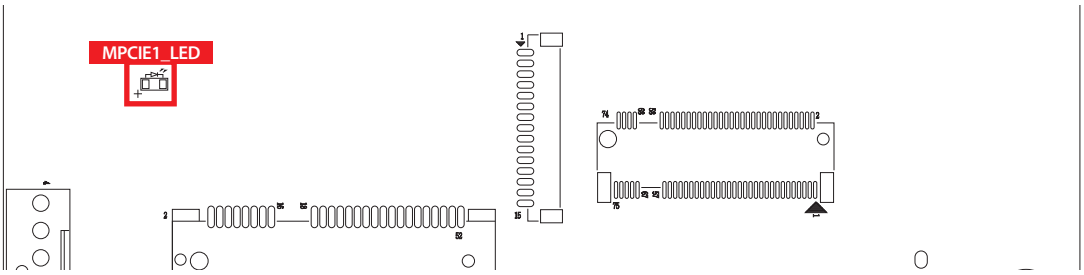

The MPCIE1_LED is used to indicate the status of WAN, WWAN, and WPAN on the mini PCIe card.

2.4.2.12 SW3 : Ignition power mode

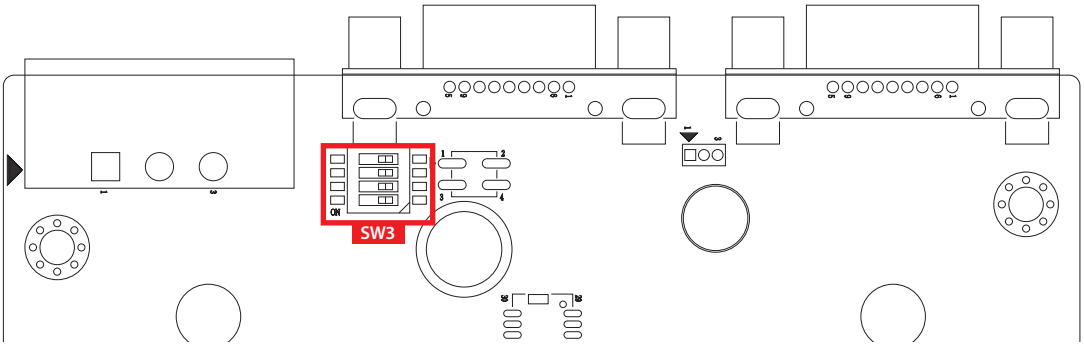

The EAC-4000 provides 16 different power on/off delay modes, which are adjustable via the SW3 switch. The default DIP switch setting is 0 in ATX power mode.

The modes are listed in the table below :

DIP Switch Position	Power on delay	Power off delay	Switch Position
0	ATX mode (Default)		
1	No delay	10 seconds	
2	No delay	15 seconds	
3	No delay	20 seconds	
4	No delay	30 seconds	
5	No delay	60 seconds	
6	5 seconds	10 seconds	
7	5 seconds	30 seconds	
8	5 seconds	60 seconds	
9	5 seconds	90 seconds	
A	5 seconds	120 seconds	
B	10 seconds	10 seconds	
C	10 seconds	30 seconds	
D	10 seconds	60 seconds	
E	10 seconds	90 seconds	
F	AT Mode		

3

SYSTEM SETUP

3.1 How to Open Your EAC-4000

Step 1 Remove four F-M3x4L screws and open bottom cover.

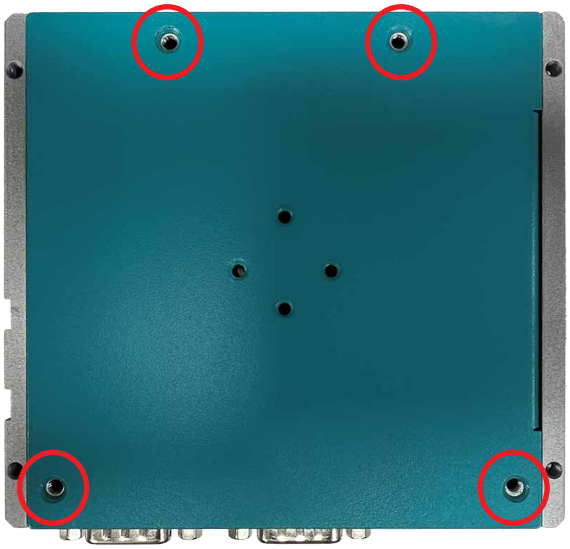

Step 2 Remove two PH-M3x6L screws and pick up Aluminum Block.

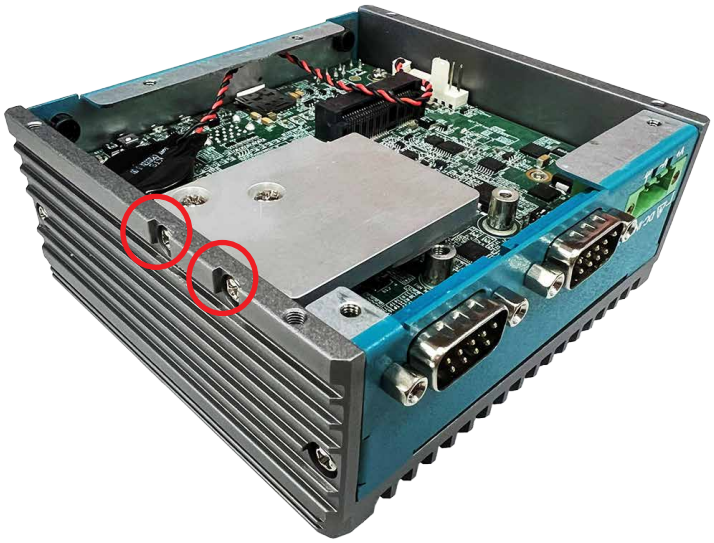

Step 3 Finished.

3.2 Installing Nano SIM Card

3.2.1 Install SIM card into to slot.

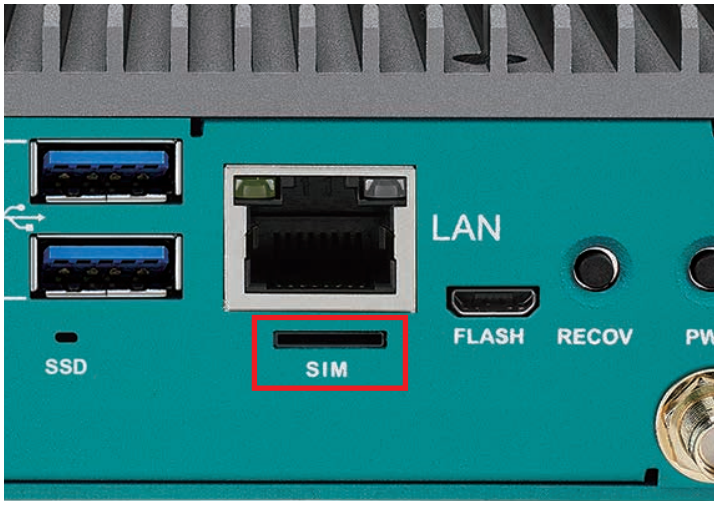

3.3 Installing MiniPCIe

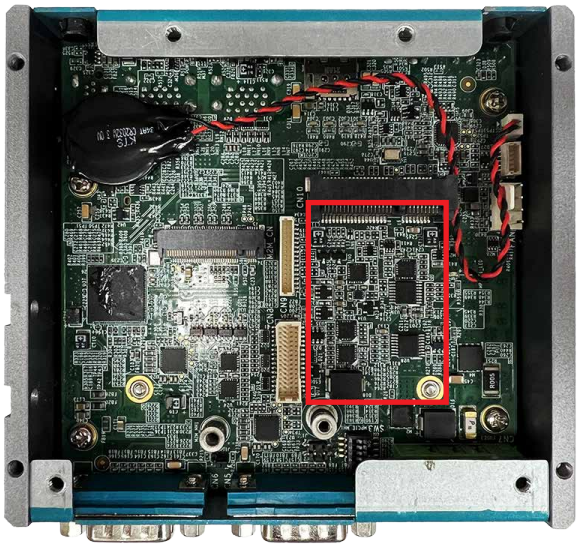

Step 1 Install Mini PCIe card into the Mini PCIe slot.

Step 2 Fasten one M2.5 screw.

3.4 Installing M.2

3.4.1 M.2 Key M 2242

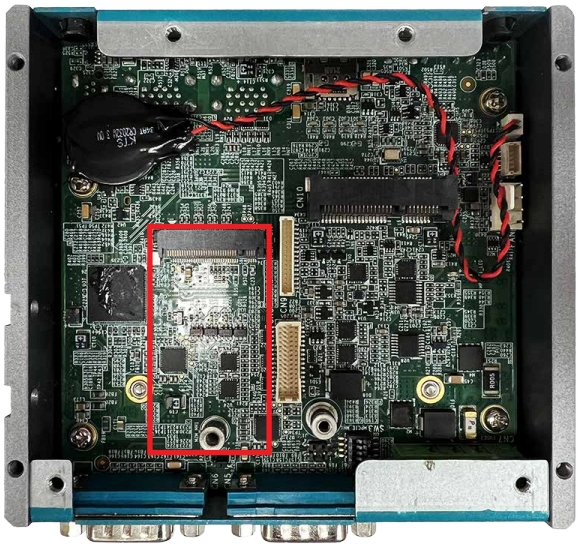

Step 1 Install M.2 into the M.2 slot.

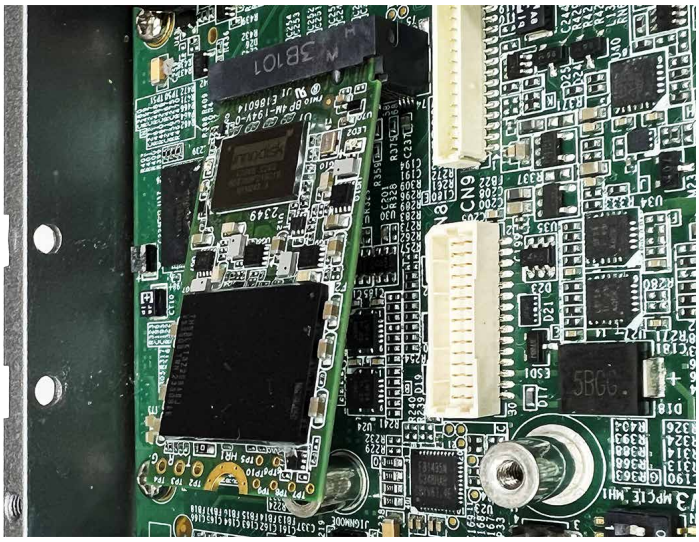

Step 2 Fasten one I-M3x4L screw.

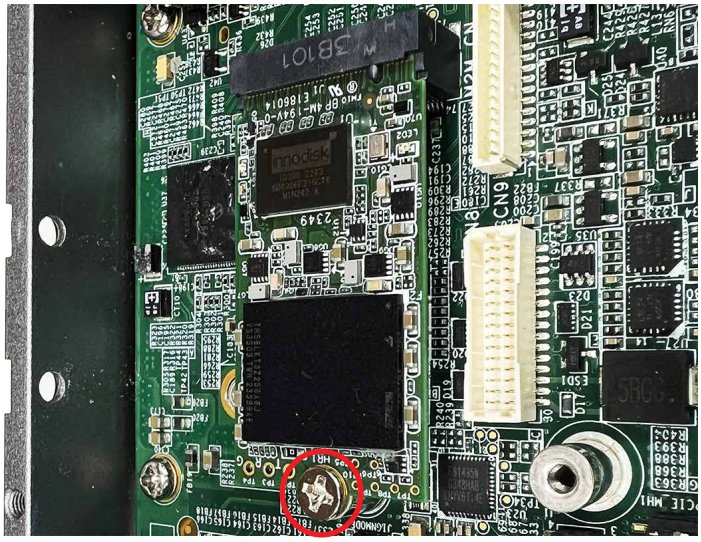

3.5 Installing Antenna Cable

Step 1 Check antenna cable and washers.

Step 2 Install antenna cable and then fasten washer and nut.

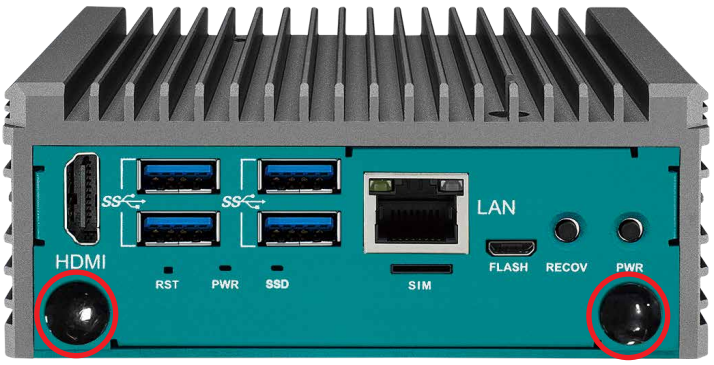

3.6 Mounting Your EAC-4000

3.6.1 Wall Mount

Install wall mount bracket then fasten four pcs F-M3x4L screws.

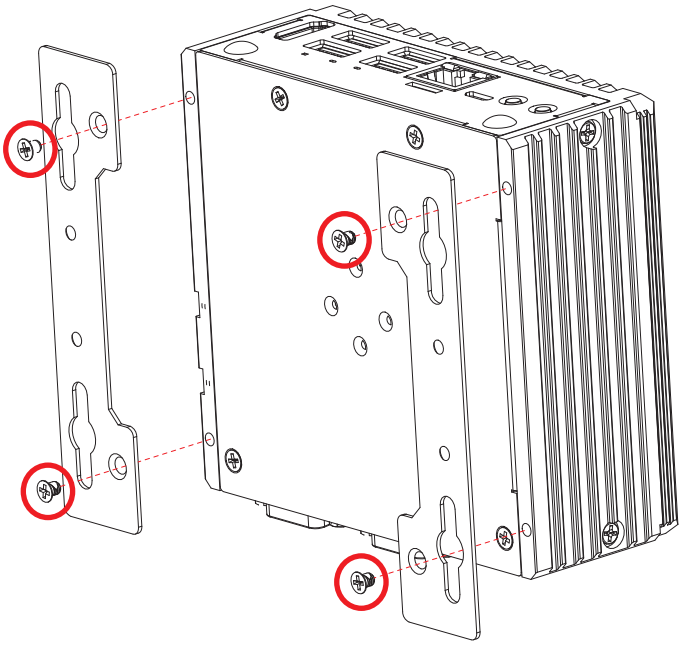

3.6.2 DIN Rail Mount

Install din rail kit then fasten two pcs F-M3x4L screws.

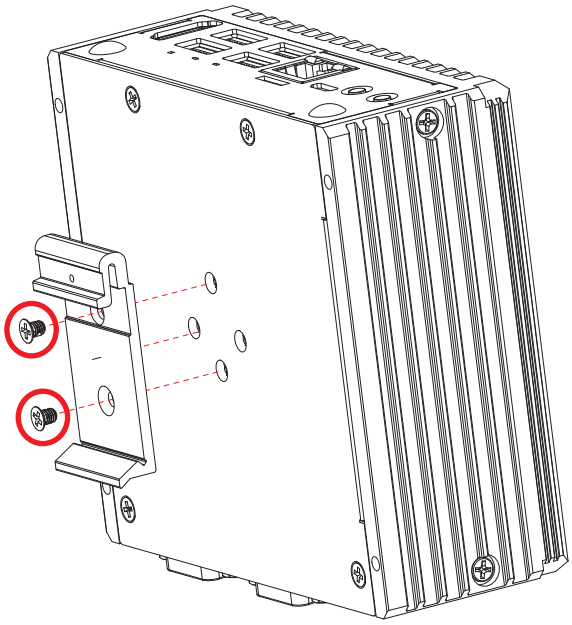

4

SOFTWARE SETUP

4.1 Flash an Image to the EAC-4000

Before starting the flashing process, ensure that the EAC-4000 is turned off and disconnected from the power supply. You'll also need a host computer running Ubuntu 20.04 or later.

4.1.1 Prepare the Host Computer

Step 1: Open a terminal on the host computer and temporarily disable the automount feature for new external storage devices. On most Debian-based Linux distributions, you can do this with the following command :

```
$ sudo systemctl stop udisks2.service
```

Step 2: Ensure that the "nfs-kernel-server" service is running on the host computer by using this command :

```
$ sudo service nfs-kernel-server start
```

4.1.2 Download the OS Image File to the Host Computer

Step 1: Download the image package. The file name will be similar to :

```
mfi_eac4000-600xxx-xx-p3767-xxg_ubtudsk.tzst
```

Step 2: Verify the package integrity using the following command :

```
$ md5sum -c ./mfi_eac4000-600xxx-xx-p3767-xxg_ubtudsk.tzst.md5
```

Step 3: Extract the compressed image files by running one of the following commands :

```
$ sudo tar --zstd -xvpf mfi_eac4000-600xxx-xx-p3767-xxg_ubtudsk.tzst
```

```
or
```

```
$ zstd -d mfi_eac4000-*.tzst -c | sudo tar -xvpf -
```

Step 4: Navigate to the decompressed directory and run the script to install the necessary dependencies :

```
$ sudo ./l4t_flash_prerequisites.sh
```

4.1.3 Connect the EAC-4000 to the host computer

Step 1: Connect the power adapter to the EAC-4000, but do not turn it on yet.

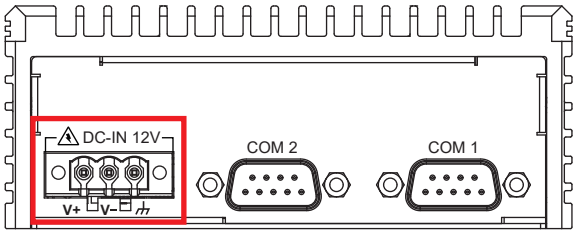

Step 2: Connect a Micro USB cable to the "Flash" port on the EAC-4000, and connect the other end to an available USB port on the host computer. You can connect up to five EAC-4000 devices in recovery mode to the host.

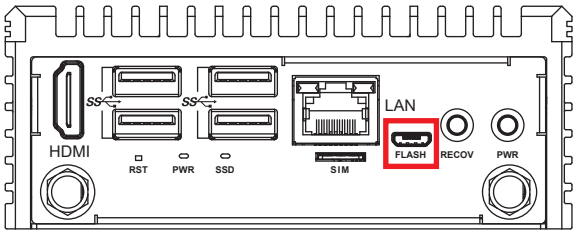

Step 3: Press and hold the "Recov" button on the EAC-4000.

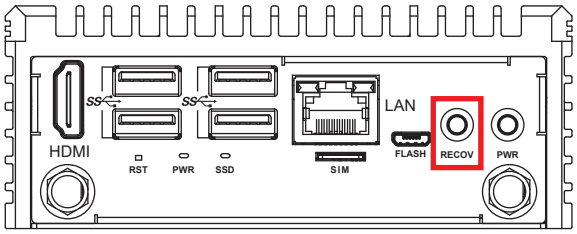

Step 4: While holding the "Recov" button, power on the EAC-4000. Keep holding the "Recov" button for at least two seconds, then release it.

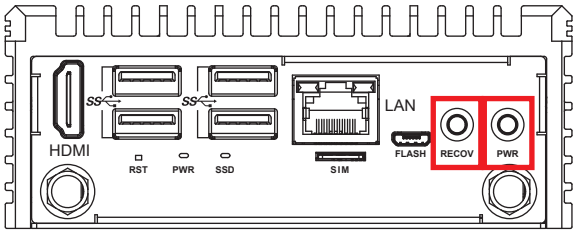

Step 5: With the device in recovery mode, run the following command on the host computer to check if the device is detected :

```
lsusb
```

Step 6: You should see a USB device listed with the following information :

```
BUS XXX Device XXX: ID 0955:7x23 Nvidia Corp. APX
```

4.1.4 Flash the Image to the EAC-4000

Step 1: Open a terminal on the host computer and navigate to the directory where you extracted the package.

Step 2: Run the following command from the decompressed folder to flash the image. This process will take some time.

```
$ sudo ./mfi_eacpltfs.flash --boot-dev nvme
```

Step 3: Or you will get hints while input the incompatible arguments :

```
$ Here are examples of usage for flashing the EAC platform image
```

```
Usage: sudo ./mfi_eacpltfs.flash --boot-dev nvme
```

```
options: --boot-dev --- Select a boot inferace: nvme as boot storage
```

Step 4: The default login credentials for accessing the system are :

```
User: nvidia
```

```
Password: nv1234
```

4.2 Peripheral Interface Guide

The platform provides several simple tools and utilities for interacting with the system and peripherals. The tools can be found at the following path :

```
/opt/vecow/tools/
```

With different control interfaces, the following provides usage instructions and descriptions for common bus controls or mapping tables. For detailed information and any available script tools, please refer to the tools path mentioned above.

4.2.1 Serial Communication Port (COM)

To enable the serial ports COM1 (/dev/ttyTHS1) and COM2 (/dev/ttyTHS2), one should set the GPIO pins PZ.03, PZ.04, PZ.06, and PP.00, PAC.00, PP.01, respectively, to the values listed below.

COM1 Mode Setup Table (Default to RS-232)

Standard	PZ.03	PZ.04	PZ.06
RS-232	0	0	1
RS-422	0	0	0
RS-485	1	0	1

COM2 Mode Setup Table (Default to RS-232)

Standard	PP.00	PAC.00	PP.01
RS-232	0	0	1
RS-422	0	0	0
RS-485	1	0	1

4.2.1.1 GPIO Pin Mapping

The GPIO pin labels (e.g., PZ.03) correspond to specific GPIO numbers used in commands. Below are the mappings :

Pin No.	GPIO Chip	Line
PZ.03	gpiochip0	133
PZ.04	gpiochip0	134
PZ.06	gpiochip0	136
PP.00	gpiochip0	92
PAC.00	gpiochip0	138
PP.01	gpiochip0	93

4.2.1.2 Example Commands

To set COM1 to RS-232, execute :

```
sudo gpioset -m wait 0 113=0 134=0 136=1
```

We also provide a self-test between COM1 and COM2 as illustrated in rs232.py.

4.2.1.3 Use Case

These settings are useful for enabling serial communication ports in different standards (e.g., RS-232, RS-422, RS-485) for applications such as industrial automation, embedded systems, or serial device interfacing.

4.2.2 GPIO Interface

The expansion header on EAC-4000 includes the GPIO configuration. The available GPIOs are listed below :

Pin No.	GPIO Chip	Line
PI.00	gpiochip0	51
PI.01	gpiochip0	52
PI.02	gpiochip0	53
PH.07	gpiochip0	50
PQ.05	gpiochip0	105
PP.06	gpiochip0	98
PEE.02	gpiochip1	25

4.2.2.1 Listing GPIO Information

You can use the gpioinfo command to list the chip and line numbers corresponding to the available GPIOs. For example :

* The pin PI.00 corresponds to gpiochip0 and line 51.

4.2.2.2 Exporting a GPIO Pin

Before activating a GPIO pin, you need to find its GPIO number. For example :

* PI.00 corresponds to gpio-399, observed by the command of cat/sys/kernel/debug/gpio | grep PI.00. You can export this GPIO pin with the following command :

```
echo 399 > /sys/class/gpio/export
```

4.2.2.3 Configuring GPIO Direction

The direction of a GPIO pin can be configured as input or output. Use the following commands :

* To set PI.00 as an input pin :

```
echo "in" > /sys/class/gpio/PI.00/direction
```

* To set PI.01 as an output pin :

```
echo "out" > /sys/class/gpio/PI.01/direction
```

4.2.2.4 Setting GPIO Output Value

If the GPIO is configured as an output pin, you can set its value to 0 (low) or 1 (high). For example :

* To set PI.01 to 0 :

```
echo 0 > /sys/class/gpio/PI.01/value
```

* To set PI.01 to 1 :

```
echo 1 > /sys/class/gpio/PI.01/value
```

4.2.3 Header Pin Placement

The expansion header on EAC-4000 includes the UART, SPI, I2C, GPIO configuration.

```
+------+-----+-----+-----+-----+-----+-----+-----+-----+-----+-----+-----+-----+-----+-----+
|  P2  | P4  | P6  | P8  | P10 | P12 | P14 | P16 | P18 | P20 | P22 | P24 | P26 | P28 | P30 |
+------+-----+-----+-----+-----+-----+-----+-----+-----+-----+-----+-----+-----+-----+-----+
\   P1 | P3  | P5  | P7  | P9  | P11 | P13 | P15 | P17 | P19 | P21 | P23 | P25 | P27 | P29 |
  \----+-----+-----+-----+-----+-----+-----+-----+-----+-----+-----+-----+-----+-----+-----+
```

4.2.3.1 Pin Mapping

The pin header description table

Pin No.	Function	Pin No.	Function
1	Debug Port TXD_3V3	2	VCC3
3	Debug Port RXD_3V3	4	GPIO PI.00
5	GND	6	GPIO PI.01
7	I2C SCL	8	GPIO PI.02
9	I2C SDA	10	GPIO PH.07
11	GND	12	GPIO PQ.05
13	UART TXD	14	GPIO PP.06
15	UART RXD	16	GPIO PEE.02
17	UART RTS	18	GND
19	UART CTS	20	CAN high
21	GND	22	CAN Low
23	SPI SCK	24	GND
25	SPI MISO	26	Ignition
27	SPI MOSI	28	FP_PWR_BTN_P
29	SPI CS	30	GND

4.2.4 I2C Interface

The expansion header on EAC-4000 includes the I2C configuration. You can probe all possible addresses on the specified I2C (I2C1) bus /dev/i2c-7.

```
$ sudo i2cdetect -y -r 7
```

Note that the address 0x32 is currently in use by the system (RTC). You have to skip 0x32 and select the other addresses.

4.2.5 LTE/5G Modules

4.2.5.1 Supported Modules : Quectel EC25

The AT command port of this modules is ttyUSB2

```
$ AT_PORT=/dev/ttyUSB2
```

To enable the this module, the GPIO pin PK.03 needs to be set high. Simply run the following command :

```
$ echo 415 | sudo tee /sys/class/gpio/export
```

4.2.5.2 Connecting to Network

To connect to cellular network, create a GSM connection :

```
# nmcli c a type gsm apn internet
```

Replace internet with the APN provided by your ISP. Activate the connection :

```
# nmcli c up gsm
```

Test the connection :

```
$ ping -I wwan0 1.1.1.1
```

4.2.5.3 Troubleshooting

To connect to cellular network, create a GSM connection :

```
# nmcli c a type gsm apn internet
```

Reset the module to factory settings :

```
# nmcli c up gsm
```

Test the connection :

```
# echo -e "AT&F\r\n" >${AT_PORT}
```

A

APPENDIX A : Power Consumption

Testing Board	EAC-4000
RAM	16 GB 128-bit LPDDR5/ 8 GB 128-bit LPDDR5
USB-1	USB Flash Kingston 3.0 16GB
USB-2	USB Flash Kingston 3.0 16GB
USB-3	USB Flash Kingston 3.0 16GB
USB-4	USB Flash Kingston 3.0 16GB
Storage	M.2 Key M
LAN 1	1.0 Gbps
Graphics Output	HDMI
Power Plan	15W/25W(NX 16GB, Nano 8GB)
Power Source	Chroma 62006P-100-25
Test Program	Burn-in Test, Stress-ng Test

A.1 NVIDIA® Jetson Orin™ (NX 16GB) System-On-Module (EAC-4000_15W)

Power on and boot to Ubuntu 22.04 LTS 64bit

CPU	Power Input	Ubuntu 22.04 LTS 64bit			
		idle status CPU usage less 3%		Run 100% CPU usage	
		Max Current	Max Consumption	Max Current	Max Consumption
NVIDIA® Jetson Orin™ (NX 16GB) System-On-Module	12V	0.801A	9.6W	1.873A	22.50W

A.2 NVIDIA® Jetson Orin™ (NX 16GB) System-On-Module(EAC-4000_25W)

Power on and boot to Ubuntu 22.04 LTS 64bit

CPU	Power Input	Ubuntu 22.04 LTS 64bit			
		idle status CPU usage less 3%		Run 100% CPU usage	
		Max Current	Max Consumption	Max Current	Max Consumption
NVIDIA® Jetson Orin™ (NX 16GB) System-On-Module	12V	0.806A	9.7W	2.120A	25.44W

A.3 NVIDIA® Jetson Orin™ (Nano 8GB) System-On-Module(EAC-4000_15W)

Power on and boot to Ubuntu 22.04 LTS 64bit

CPU	Power Input	Ubuntu 22.04 LTS 64bit			
		idle status CPU usage less 3%		Run 100% CPU usage	
		Max Current	Max Consumption	Max Current	Max Consumption
NVIDIA® Jetson Orin™ (Nano 8GB) System-On-Module	12V	0.802A	9.6W	2.09A	25.18W

A.4 NVIDIA® Jetson Orin™ (Nano 8GB) System-On-Module(EAC-4000_25W)

Power on and boot to Ubuntu 22.04 LTS 64bit

CPU	Power Input	Ubuntu 22.04 LTS 64bit			
		idle status CPU usage less 3%		Run 100% CPU usage	
		Max Current	Max Consumption	Max Current	Max Consumption
NVIDIA® Jetson Orin™ (Nano 8GB) System-On-Module	12V	0.761A	9.1W	2.632A	31.63W

B

APPENDIX B : Supported Module List

B.1 Supported 4G/GPS List

Type	Model	Support Standard
Mini PCIe	Quectel EC25 Series	LTE Category 4 UMTS/HSPA/GSM/GPRS/EDGE GPS/GLONASS/BeiDou/Galileo/QZSS

B.2 Supported Wi-Fi/Bluetooth List

Type	Model	Support Standard
mini PCIe	SparkLAN_WNFT-237ACN(BT)	IEEE 802.11ac/a/b/g/n BT5.0
mini PCIe	jjPlus JWW6051	IEEE 802.11ac/a/b/g/n BT5.0
mini PCIe	Intel AX210NGW	IEEE 802.11a/b/e/g/h/i/k/n/r/u/v/w/ac/ax BT5.3

For further support information, please visit www.vecow.com

This document is released for reference purpose only.
All product offerings and specifications are subject to change without prior notice.
No part of this publication may be reproduced in any form or by any means, electric, photocopying, or recording, without prior authorization from the publisher.
The rights of all the brand names, product names, and trademarks belong to their respective owners.
© Vecow Co., Ltd. 2026. All rights reserved.