EMBC 7000

2.5GigE 5G

Intel® Core™ Ultra Processor
3.5" Embedded Single Board Computer

Robotic SLAM

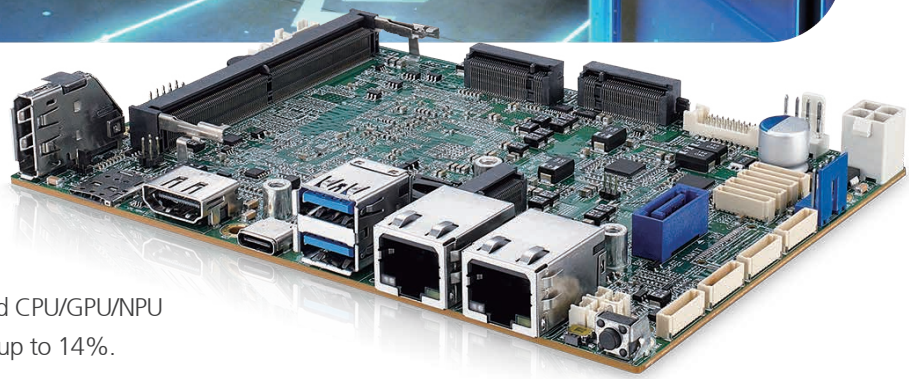

- Intel® Core™ Ultra processors feature a hybrid CPU/GPU/NPU architecture, improving CPU productivity by up to 14%.
- Intel® AI Boost NPU delivers 11 TOPS AI-focused performance
- Fanless -40°C to 75°C operation
- Up to 4 independent displays : HDMI 2.1, 2 DisplayPort 1.4, eDP
- 2 2.5G LAN, 2 USB 3.2 Gen 2, 1 USB 3.2 Gen 2x2 Type-C with display
- 3 M.2 sockets for storage and expansion, optional SUMIT B expansions for 10G LAN, 10G SFP+, or 4G Networks
- DC 9V to 55V Power Input, Software Ignition Power Control
- Supports Intel® vPro, TSN, TCC, and TPM 2.0
- Optional One-Stop AIoT Solution Service supports OpenVINO™ toolkit for AI Computing

Intelligent Vending

Factory Automation

intel partner Gold IoT Solutions

intel CORE ULTRA 7

OpenVINO

TSN TYPE C -40° 75° SW 9V~55V

Vecow

Specifications

System

Processor	Intel® Core™ Ultra 7 165U Processor (12 Cores) Intel® Core™ Ultra 5 135U Processor (12 Cores)
NPU	Intel® AI Boost
Chipset	Intel® SoC
BIOS	AMI
SIO	IT8786E
Memory	1 DDR5 5600MHz SO-DIMM, up to 48GB
OS	Windows 11, Windows 10, Linux

Graphics

GPU	Intel® Graphics
Interface	Supports Independent Display - 1 HDMI 2.1 : up to 4096x2304 @60Hz - 1 DisplayPort 1.4 : up to 4096 x 2304 @60Hz - 1 DisplayPort 1.4 : up to 3840 x 2160 @60Hz by USB Type-C - 1 eDP : up to 3840 x 2400 @120Hz

Ethernet

LAN 1	Intel® I226 2.5GigE LAN supports TSN
LAN 2	Intel® I226 2.5GigE LAN supports TSN

Audio

Audio Coded	Realtek ALC888S-VD, 7.1 Channel HD Audio
Audio Interface	1 Mic-in, 1 Line-out (Header)

I/O Interface

Front I/O	- 1 DisplayPort Connetcor - 1 HDMI Connetcor - 2 2.5G RJ45 Connetcor - 2 USB 3.2 Type-A - 1 USB 3.2 Gen2x2 Type-C - 1 SIM Card Socket - 1 Power Button - 1 Reset Button - 1 Power LED - 1 Wireless LED - 1 Wifi LED - 1 HDD LED
Internal I/O	- 1 ATX 4-pin Power Connector - 1 SUMIT B Connector **(EMBC-7000E)** - 1 M.2 Key M Socket (PCIex4 Gen4, SATA)(2280) - 1 M.2 Key B Socket (PCIex2, USB 3 default, USB 2)(3052) - 1 M.2 Key E Socket (PCIex1, USB 2)(2230) - 1 DDR5 SO-DIMM Socket - 1 eDP Header - 1 USB 2.0 Wafer with 2 ports - 2 8-bit GPIO Header - 4 COM RS-232/422/485 Header - 1 Audio Header - 1 4-pin Fan Header - 1 SATA Data Connector - 1 SATA Power Connector

Storage

SATA	1 SATA III (6Gbps)
M.2	- 1 M.2 Key M Socket (2280, PCIe 4.0 x4) - 1 M.2 Key B Socket (2242, PCIe x2, share with expansion)

Expansion

SUMIT	1 SUMIT B Connector **(EMBC-7000E)**
M.2	- 1 M.2 Key B Socket (3042/3052, PCIe x2/USB 3, default/USB 2) with internal SIM - 1 M.2 Key E Socket (2230, PCIe x1/USB 2)

Power

Power Input	DC 9V to 55V
Power Interface	ATX Power Connector
Ignition Control	16-mode Software Ignition Control

Others

TPM	Infineon SLB9672 supports TPM 2.0, SPI Interface
Watchdog Timer	Reset : 1 to 255 sec./min. per step
Smart Management	Wake on LAN, PXE supported
HW Monitor	Monitoring temperature, voltages. Auto throttling control when CPU overheats.

Mechanical

Dimensions	146.0mm x 102.0mm (5.75" x 4.02")

Environment

Operating Temperature	-40°C to 75°C (-40°F to 167°F) with airflow
Storage Temperature	-40°C to 85°C (-40°F to 185°F)
Humidity	5% to 95% Humidity, non-condensing
Relative Humidity	95% @75°C
EMC	CE, FCC, ICES

* All product information may subject to change without prior notice.
* The rights of all brand names, product names and trademarks belong to their respective owners.

Copyright © 2025 Vecow Co., Ltd. All rights reserved.

Vecow info@vecow.com

Packing List

EMBC-7000 SBC	x1
Cable Kit	
- COM Port Cable	x2
- SATA Data Cable	x1
- SATA Power Cable	x1
- USB 2.0 Cable	x1
- Audio Cable	x1

Order Information

Model	CPU	2.5G	COM	USB 3.2		SUMIT
				Type-A	Type-C	
EMBC-7000E-165U	Core Ultra 7 165U	2	2	2	1	Y
EMBC-7000-165U	Core Ultra 7 165U					NA
EMBC-7000-135U	Core Ultra 5 135U					NA

* Core Ultra 200U Processor (Arrow Lake-U) by request

Accessories

75-VE90003-S10	Heat Sink for EMBC-7000 Series
75-VE90003-P10	Heat Spreader for EMBC-7000 Series
61-13Q1009-0DA	COM Port Cable
61-13I0707-0DA	SATA Data Cable
61-13P0430-08A	SATA Power Cable
61-193102U-156	USB 2.0 Cable
61-13T10LM-3CG	Audio Cable

Dimensions & Drawing

Unit : mm (inch)

EMBC-7000

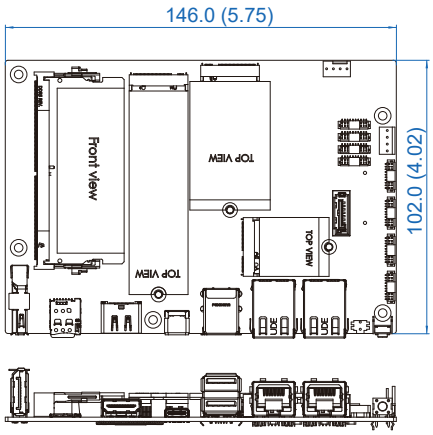
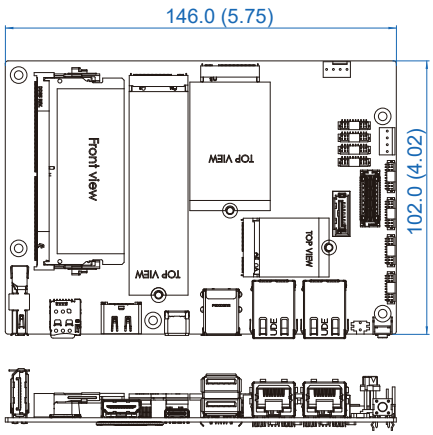
EMBC-7000E