EPBC 2000

Intel Atom® x7211RE Processor Ultra-Slim
2.5" Pico-ITX Embedded Single Board Computer

UAV Data Transmission

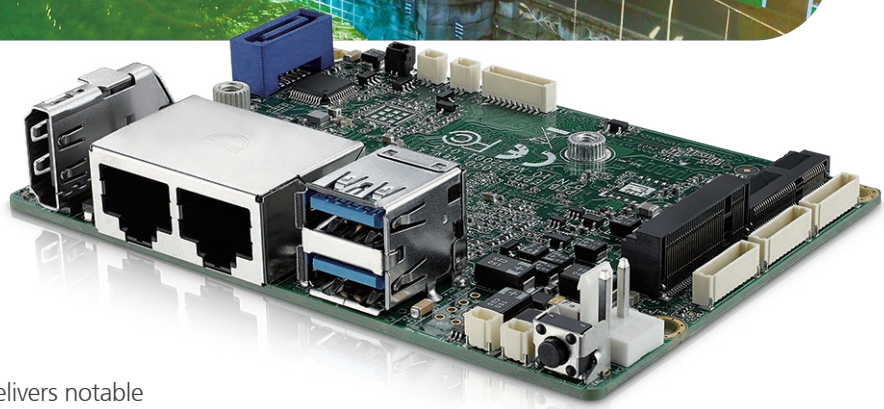

- Dual-Core Intel Atom® x7211RE Processor delivers notable improvements in CPU and GPU performance
- Small form factor, ultra-compact design
- Fanless, -40°C to 70°C Operating Temperature
- 2 2.5 GigE LAN, 2 USB 3.2, 2 COM, M.2 Key B
- HDMI 2.0 support up to 4K @60Hz resolution
- SIM Socket for WiFi/4G/5G/LTE/GPRS/UMTS
- Support OpenVINO based AI accelerator and advanced Edge AI applications

Education Assistive Technology

Intelligent Control

intel partner
Gold
IoT Solutions

2.5G SIM SS 10 4K 12V -40° 70°

Vecow

Specifications

System

Processor	Intel® Atom® x7211RE
Chipset	Intel® SoC
BIOS	AMI
SIO	IT8659E
Memory	1 DDR5 4800MHz SO-DIMM, up to 16GB, In-band ECC
OS	Windows 11, Windows 10, Linux

I/O Interface

Front I/O	- 2 RJ45 2.5G LAN - 2 USB 3.2 Gen 2 - 1 HDMI 2.0 - 1 SIM Card Socket - 1 Power button - 1 Reset button - 1 Power LED - 1 HDD LED - 2 M.2 LED
Internal I/O	- 1 DDR5 SO-DIMM Socket - 1 M.2 Key B Connector (2280/3042/3052, PCIex2/USB3/default USB2) - 1 M.2 Key E Connector (2230, PCIex1/USB2) - 1 SATA Data Connector - 1 SATA Power Connector - 1 DC-IN Connector - 2 COM Header (RS-232/422/485) - 1 10-pin USB 2.0 x2 Header - 1 10-pin GPIO header - 1 Audio Mic in and Line out Header - 1 power LED header - 1 storage LED header - 1 Reset Header - 1 Clear CMOS Header

Expansion

M.2	- 1 M.2 Key B (2280/3042/3052, PCIex2/USB3/default USB2) - 1 M.2 Key E (2230, PCIex1/USB2)

Graphics

Graphics Processor	Intel® UHD Graphics
Interface	1 HDMI 2.0: Up to 4096 x 2160 @60Hz

Storage

SATA	1 SATA III (6Gbps)
M.2	1 M.2 Key B (2280/3042/3052, PCIex2, share with expansion)

Ethernet

LAN 1	Realtek® RTL8125BI-CG 2.5G LAN
LAN 2	Realtek® RTL8125BI-CG 2.5G LAN

Power

Power Input	12V DC-in
Power Interface	2-pin : V-, V+

Others

Watchdog Timer	Reset: 1 to 255 sec./min. Per Step
Smart Management	Wake on LAN, PXE supported
HW Monitor	Monitoring temperature, voltages. Auto throttling control when CPU overheats.

Mechanical

Dimensions	100.0mm x 72.0mm (3.94" x 2.83")

Environment

Operating Temperature	-40°C to 70°C with air flow
Storage Temperature	-40°C to 85°C
Humidity	5% to 95% Humidity, Non-condensing
Relative Humidity	95% at 70°C
EMC	CE, FCC, ICES

Packing List

EPBC-2000	x1
Cable Kit	
- COM Port Cable	x2
- SATA Data Cable	x1
- SATA Power Cable	x1
- USB 2.0 Cable	x1
- Audio Cable	x1

Order Information

Model	2.5 GigE LAN	USB 3.2	HDMI 2.0	SIM	COM
EPBC-2000	2	2	1	1	2

Accessories

62-M010026-S0A	Heat sink for EPBC-2000
61-13Q1009-0DA	COM Port Cable
61-1470022-005	PBC-1000/2000 SATA Power Cable
61-13B0707-3BA	PBC-1000/2000 SATA data cable
61-193102U-156	USB 2.0 Cable
61-1300024-39A	Audio Cable

Dimensions & Drawing

Unit : mm (inch)

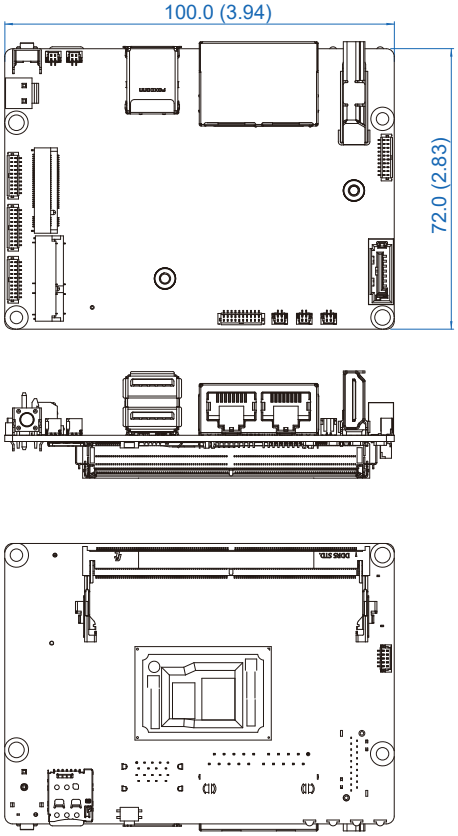

* All product information may subject to change without prior notice.
* The rights of all brand names, product names and trademarks belong to their respective owners.
Copyright © 2025 Vecow Co., Ltd. All rights reserved.

Vecow info@vecow.com