Neousys Technology Inc.

NRU-52S+/ NRU-52S Series

User Manual

Revision 1.7

Table of Contents

Table of Contents 2
Legal Information 4
Contact Information 5
Declaration of Conformity 5
Copyright Notice 6
Safety Precautions 7
Battery Warning 7
Service and Maintenance 8
ESD Precautions 8
Restricted Access Location 8
About This Manual 9

1 Introduction

1.1 NRU-52S Specifications 11
1.2 NRU-52S+ Specifications 13
1.3 Dimension of NRU-52S Series 15
1.3.1 Front Panel View 15
1.3.2 Side Panel View 15
1.3.3 Rear Panel View 16
1.3.4 Bottom View 16
1.3.5 Fan Kit Dimensions 17

2 System Overview

2.1 NRU-52S Packing List 18
2.2 NRU-52S Series Front Panel 19
2.2.1 3-pin Terminal Block for DC and Ignition Control 20
2.2.2 Force Recovery Button 20
2.2.3 Micro SIM Slot 21
2.2.4 MicroSD Slot 21
2.2.5 DisplayPort 22
2.2.6 USB3.2 Gen1 Ports 22
2.2.7 CAN bus Port 23
2.2.8 MicroUSB Port 24
2.2.9 COM Port 25
2.2.10 System Status LEDs 26
2.2.11 Power Button 26
2.3 NRU-52S Series Rear Panel 27
2.3.1 DIO & GPS PPS Port 28
2.3.2 IEEE 802.3bt PoE ++ Port 29
2.3.3 Grounding Point 30
2.4 Internal I/O 31
2.4.1 M.2 B Key 2242/ 3042/ 3052 & SIM Slots 31
2.4.2 mini-PCIe Slots for NRU-52S+ 33
2.4.3 mini-PCIe Slots for NRU-52S 35
2.4.4 DIP Switch for COM Port Configuration 38

3 System Installation

3.1 Disassembling the System Enclosure 40
3.2 Installing Internal Components 41
3.2.1 M.2 B Key 2242/ 3042/ 3052 & SIM Card Installation 41
3.2.2 mini-PCIe Module Installation 43
3.3 Fan Kit Installation 45
3.4 Installing the System Enclosure 47
3.5 Wall Mount Installation 48
3.6 Powering On the System 50

3.6.1 Powering On Using the Power Button 50

4 Ignition Power Control

4.1 Principles of Ignition Power Control 51
4.1.1 Additional Features of Ignition Power Control 52
4.1.2 Wiring Ignition Signal 53
4.1.3 Operation Modes of Ignition Power Control 54

5 Reflashing the NRU System

6 Software Reminder

Legal Information

All Neousys Technology Inc. products shall be subject to the latest Standard Warranty Policy

Neousys Technology Inc. may modify, update or upgrade the software, firmware or any accompanying user documentation without any prior notice. Neousys Technology Inc. will provide access to these new software, firmware or documentation releases from download sections of our website or through our service partners.

Before installing any software, applications or components provided by a third party, customer should ensure that they are compatible and interoperable with Neousys Technology Inc. product by checking in advance with Neousys Technology Inc. Customer is solely responsible for ensuring the compatibility and interoperability of the third party's products. Customer is further solely responsible for ensuring its systems, software, and data are adequately backed up as a precaution against possible failures, alternation, or loss.

For questions in regards to hardware/ software compatibility, customers should contact Neousys Technology Inc. sales representative or technical support.

To the extent permitted by applicable laws, Neousys Technology Inc. shall NOT be responsible for any interoperability or compatibility issues that may arise when (1) products, software, or options not certified and supported; (2) configurations not certified and supported are used; (3) parts intended for one system is installed in another system of different make or model.

Contact Information

Headquarters (Taipei, Taiwan)	**Neousys Technology Inc.** 15F, No.868-3, Zhongzheng Rd., Zhonghe Dist., New Taipei City, 23586, Taiwan Tel: +886-2-2223-6182 Fax: +886-2-2223-6183 Email, Website
Americas (Illinois, USA)	**Neousys Technology America Inc.** 3384 Commercial Avenue, Northbrook, IL 60062, USA Tel: +1-847-656-3298 Email, Website
China	**Neousys Technology China Co., Ltd.** Room 612, Building 32, Guiping Road 680, Shanghai Tel: +86-2161155366 Email, Website

Declaration of Conformity

FCC	This equipment has been tested and found to comply with the limits for a Class A digital device, pursuant to part 15 of the FCC Rules. These limits are designed to provide reasonable protection against harmful interference when the equipment is operated in a commercial environment. This equipment generates, uses, and can radiate radio frequency energy and, if not installed and used in accordance with the instruction manual, may cause harmful interference to radio communications. Operation of this equipment in a residential area is likely to cause harmful interference in which case the user will be required to correct the interference at own expense.
CE	The product(s) described in this manual complies with all applicable European Union (CE) directives if it has a CE marking. For computer systems to remain CE compliant, only CE-compliant parts may be used. Maintaining CE compliance also requires proper cable and cabling techniques.

Copyright Notice

All rights reserved. This publication may not be reproduced, transmitted, transcribed, stored in a retrieval system, or translated into any language or computer language, in any form or by any means, electronic, mechanical, magnetic, optical, chemical, manual or otherwise, without the prior written consent of Neousys Technology, Inc.

Disclaimer

This manual is intended to be used as an informative guide only and is subject to change without prior notice. It does not represent commitment from Neousys Technology Inc. Neousys Technology Inc. shall not be liable for any direct, indirect, special, incidental, or consequential damages arising from the use of the product or documentation, nor for any infringement on third party rights.

Patents and Trademarks

Neousys, the Neousys logo, Expansion Cassette, MezIO™ are registered patents and trademarks of Neousys Technology, Inc.

Windows is a registered trademark of Microsoft Corporation.

AMD, Ryzen™ are registered trademarks of Advanced Micro Devices, Inc

All other names, brands, products or services are trademarks or registered trademarks of their respective owners.

Safety Precautions

- Read these instructions carefully before you install, operate, or transport the system.
- Install the system or DIN rail associated with, at a sturdy location
- Install the power socket outlet near the system where it is easily accessible
- Secure each system module(s) using its retaining screws
- Place power cords and other connection cables away from foot traffic. Do not place items over power cords and make sure they do not rest against data cables
- Shutdown, disconnect all cables from the system and ground yourself before touching internal modules
- Ensure that the correct power range is being used before powering the device
- Should a module fail, arrange for a replacement as soon as possible to minimize down-time
- By means of a power cord connected to a socket-outlet with earthing connection
- This product is intended to be supplied by a Listed Power Adapter or DC power source, rated up to 5000m altitude operation. If further assistance is required, please contact Neousys Technology
- If the system is not going to be used for a long time, disconnect it from mains (power socket) to avoid transient over-voltage

Battery Warning

- Batteries are at risk of exploding if incorrectly installed.
- Do not attempt to recharge, force open, or heat the battery.
- Replace the battery only with the same or equivalent type recommended by the manufacturer.

Service and Maintenance

- ONLY qualified personnel should service the system
- Shutdown the system, disconnect the power cord and all other connections before servicing the system
- When replacing/ installing additional components (expansion card, memory module, etc.), insert them as gently as possible while assuring proper connector engagement

ESD Precautions

- Handle add-on module, motherboard by their retention screws or the module's frame/ heat sink. Avoid touching the PCB circuit board or add-on module connector pins
- Use a grounded wrist strap and an anti-static work pad to discharge static electricity when installing or maintaining the system
- Avoid dust, debris, carpets, plastic, vinyl and 8tyrofoam in your work area.
- Do not remove any module or component from its anti-static bag before installation

Restricted Access Location

The controller is intended for installation only in certain environments where both of the following conditions apply:

- Access can only be gained by QUALIFIED SERVICE PERSONNEL who have been instructed on the reasons for restrictions applied to the location and any precautions that shall be taken
- Access is through the use of a TOOL, lock and key, or other means of security, and is controlled by the authority responsible for the location

About This Manual

This manual introduces and demonstrates installation procedures of Neousys NRU-52S series systems featuring NVIDIA Jetson AGX Orin/ Xavier platform. The manual also demonstrates the system's general installation procedures.

Revision History

Version	Date	Description
1.0	Jan. 2024	Initial release
1.1	May. 2024	Updated mini-PCIe specifications
1.2	Sep. 2024	Updated NRU-52+ mini-PCIe specifications
1.3	Feb. 2025	Updated COM port DIP switch settings
1.4	Jun. 2025	Updated low battery detection specifications in ignition power control
1.5	Aug. 2025	Updated shock and vibration certification specifications
1.6	Jan. 206	Updated antenna installation procedure
1.7	Mar. 2026	Updated specifications

1 Introduction

NRU-52S is a rugged, wide temperature, fanless edge AI computer delivering 21 TOPS for AI-based video analytics applications requiring H.264/H.265 video decoding and real-time inference. Power by an NVIDIA® Jetson Orin™ NX/ Xavier™ NX system on module (SoM), it comprises of NVIDIA® Ampere GPUs (Orin NX), CUDA cores, Tensor cores, and NVDLA (NVIDIA® Deep Learning Accelerator).

Benefiting from the power-efficiency of NVIDIA® Jetson Orin™ NX, which consumes only 25W of power, NRU-52S+ can decode up to 18 streams of 1080p video at 30 FPS, and also offer 100 TOPS inference performance. The high AI performance per watt makes NRU-52S+ ideal for applications with a limited power source, such as in a robot, vehicle, or rolling stock. Also, with Neousys' industrial-grade thermal design, NRU-52S+ is ideal for edge deployments that require fanless wide temperature operations, such as at roadside, wayside, construction site, agriculture, or in a dusty factory.

NRU-52S+ offers four IEEE 802.3bt PoE++ ports, each port can supply up to 90W to IP cameras or PTZ speed dome cameras for AI-based detection, tracking, and recognition applications. NRU-52S+ also offers flexible expansions with two mPCIe sockets for NVMe storage, WIFI, GNSS, or V2X module; one M.2 B key for 4G LTE or 5G NR module with dedicated passive thermal design, and a total of five antenna holes for mobile broadband.It also has one hardware configurable RS232/RS422/RS485, 1x GPS PPS input, 3-CH isolated DI, and 4-CH isolated DO for communication with external devices.

By integrating PoE++ connectivity, 100 TOPS inference performance, a vast of NVIDIA AI JetPack toolkits, NRU-52S+ can enable more possibilities for real-time video analytics such as autonomous machines, security alerts, law enforcement, and V2X applications. With its -25°C to 70°C fanless operation, wide-range DC input, ignition control, and 4G/ 5G connectivity, NRU-52S+ is not only for indoor/ stationary installations but also ideal for harsh edge deployments.

1.1 NRU-52S Specifications

System Core	
Processor	NVIDIA® Jetson Xavier™ NX system-on-module (SOM), comprising NVIDIA® Volta GPU and Carmel CPU
Memory	8GB LPDDR4x @ 1600 MHz on SOM (15W TDP mode) 8GB LPDDR4x @ 1866 MHz on SOM (20W TDP mode)
eMMC	16GB eMMC 5.1 on SOM
Panel I/O Interface	
Ethernet port	4x Gigabit ports with screw-lock, share 1 Gbps total bandwidth *
PoE Capability	In compliant with IEEE 802.3bt PoE++ Type 3 and Type 4 PSE, maximum 90W output on single PoE++ port compatible with 802.3at (PoE+) and 802.3af (PoE) PD
USB	2x USB3.2 Gen1 ports (total 5 Gbps shared with M.2 B key)
Video Port	1x DisplayPort, supporting 3840x2160 at 60Hz
Serial Port	1x hardware configurable RS-232/422/485 port
CAN bus	1x isolated CAN 2.0 port
Isolated DIO	1x GPS PPS input, 3-CH isolated DI and 4-CH isolated DO
Ground Terminal	1x M4 ground terminal for chassis ESD shielding
Internal I/O Interface	
Mini PCI Express	1x full-size mini PCI Express socket (PCIe + USB 2.0) for WIFI, NVMe storage 1x full-size mini PCI Express socket (USB 2.0) for GNSS, V2X, or CAN
M.2	1x 3042/3052 M.2 B key (USB3.2 Gen 1 + USB 2.0) for 4G/5G module with dual SIM support (1x front-accessible, 1x internal)
Power Supply	
DC Input	1x 3-pin pluggable terminal block for 8V to 35V DC input and ignition power control (V+/ GND/ IGN)
Mechanical	
Dimension	173 mm (W) x 144 mm (D) x 60 mm (H)

Weight	1.4 kg
Mounting	Wall-mount bracket (optional)
Environmental	
Operating Temperature	-25°C to 70°C with passive cooling (15W TDP mode with 50W PoE++ power supply) ** -25°C to 70°C with optional fan kit (15W TDP mode with 144W PoE++ power supply) **
Storage Temperature	-40°C to 85°C
Humidity	10% to 90%, non-condensing
Vibration	Operating, MIL-STD-810H, Method 514.8, Category 4
Shock	Operating, MIL-STD-810H, Method 516.8, Procedure I
EMC	CE/FCC Class A, according to EN 55032 & EN 55035 EN 50121-3 (EN 50155:2017, Clause 13.4.8)

** A single Ethernet network implemented via a Layer 2 switch with multiple PoE-enabled ports, where all connected devices share a single IP address.*

*** For sub-zero and over 60°C operating temperature, a wide temperature Solid State Disk (SSD) is required.*

1.2 NRU-52S+ Specifications

System Core	
Processor	NVIDIA® Jetson Orin™ NX system-on-module (SOM), comprising NVIDIA® Volta GPU and Carmel CPU
Memory	8GB LPDDR5 @ 3200 MHz on SOM 16GB LPDDR5 @ 3200 MHz on SOM
Panel I/O Interface	
Ethernet port	4x Gigabit ports with screw-lock, share 1 Gbps total bandwidth *
PoE Capability	In compliant with IEEE 802.3bt PoE++ Type 3 and Type 4 PSE, maximum 90W output on single PoE++ port compatible with 802.3at (PoE+) and 802.3af (PoE) PD
USB	2x USB3.2 Gen1 ports (total 5 Gbps shared with M.2 B key)
Video Port	1x DisplayPort, supporting 3840x2160 at 60Hz
Serial Port	1x hardware configurable RS-232/422/485 port
CAN bus	1x isolated CAN 2.0 port
Isolated DIO	1x GPS PPS input, 3-CH isolated DI and 4-CH isolated DO
Ground Terminal	1x M4 ground terminal for chassis ESD shielding
Internal I/O Interface	
Mini PCI Express	1x full-size mini PCI Express socket (PCIe + USB 2.0) for WIFI, NVMe storage 1x full-size mini PCI Express socket (PCIe + USB 2.0) for GNSS, V2X, or CAN
M.2	1x 3042/3052 M.2 B key (USB3.2 Gen 1 + USB 2.0) for 4G/5G module with dual SIM support (1x front-accessible, 1x internal)
Power Supply	
DC Input	1x 3-pin pluggable terminal block for 8V to 35V DC input and ignition power control (V+/ GND/ IGN)
Mechanical	

Dimension	173 mm (W) x 144 mm (D) x 60 mm (H)
Weight	1.4 kg
Mounting	Wall-mount bracket (optional)
Environmental	
Operating Temperature	-25°C to 70°C with passive cooling (15W TDP mode with 50W PoE++ power supply) ** -25°C to 70°C with optional fan kit (15W TDP mode with 144W PoE++ power supply) **
Storage Temperature	-40°C to 85°C
Humidity	10% to 90%, non-condensing
Vibration	Operating, MIL-STD-810H, Method 514.8, Category 4
Shock	Operating, MIL-STD-810H, Method 516.8, Procedure I
EMC	CE/FCC Class A, according to EN 55032 & EN 55035 EN 50121-3 (EN 50155:2017, Clause 13.4.8)

** A single Ethernet network implemented via a Layer 2 switch with multiple PoE-enabled ports, where all connected devices share a single IP address.*

*** For sub-zero and over 60°C operating temperature, a wide temperature Solid State Disk (SSD) is required.*

1.3 Dimension of NRU-52S Series

> NOTE
>
> *All measurements are in millimeters (mm).*

1.3.1 Front Panel View

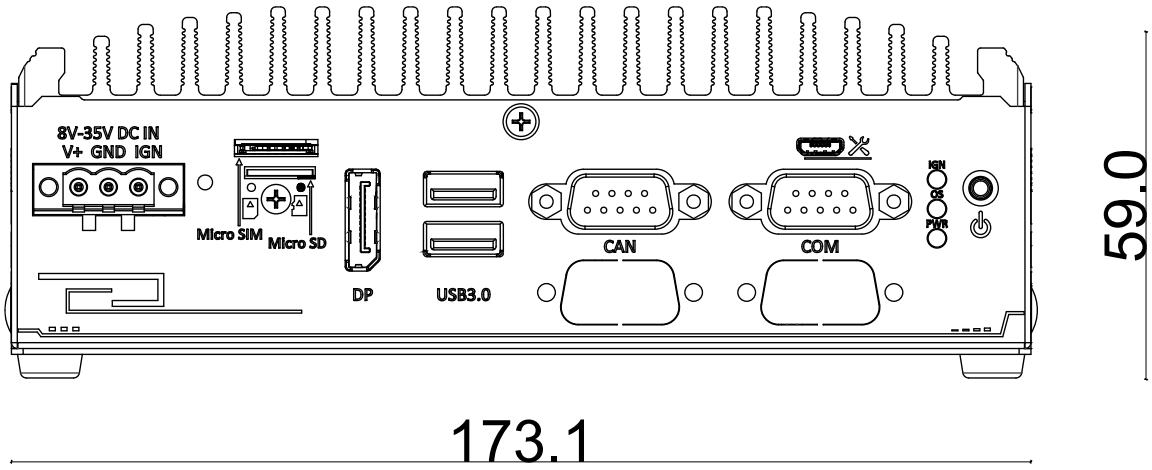

1.3.2 Side Panel View

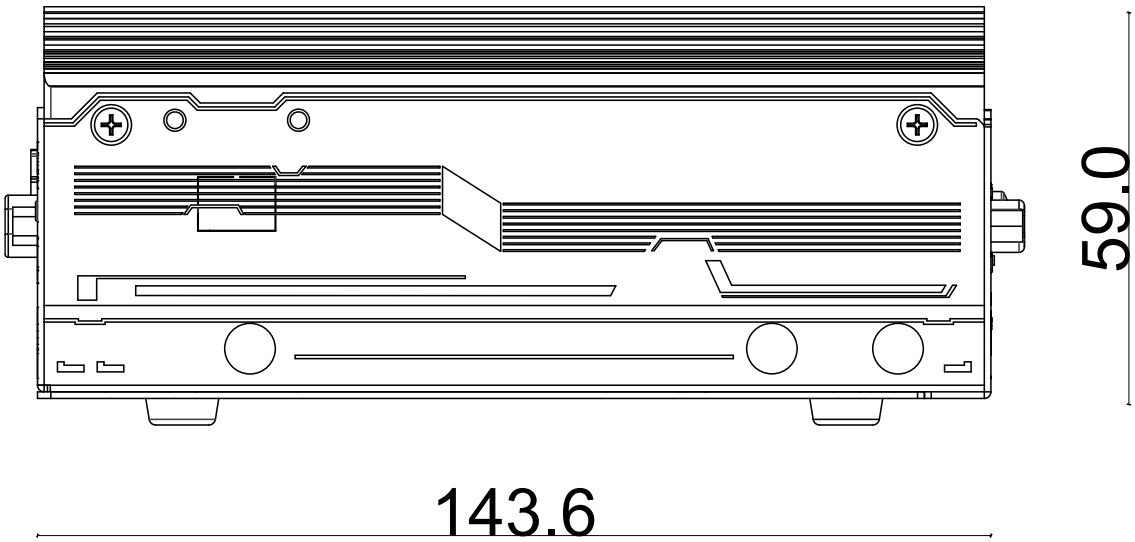

1.3.3 Rear Panel View

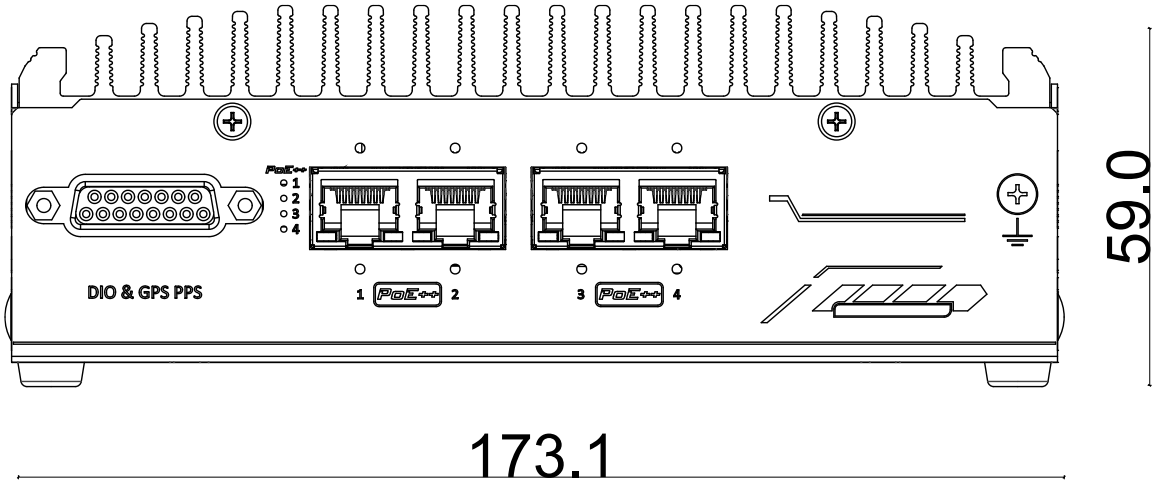

1.3.4 Bottom View

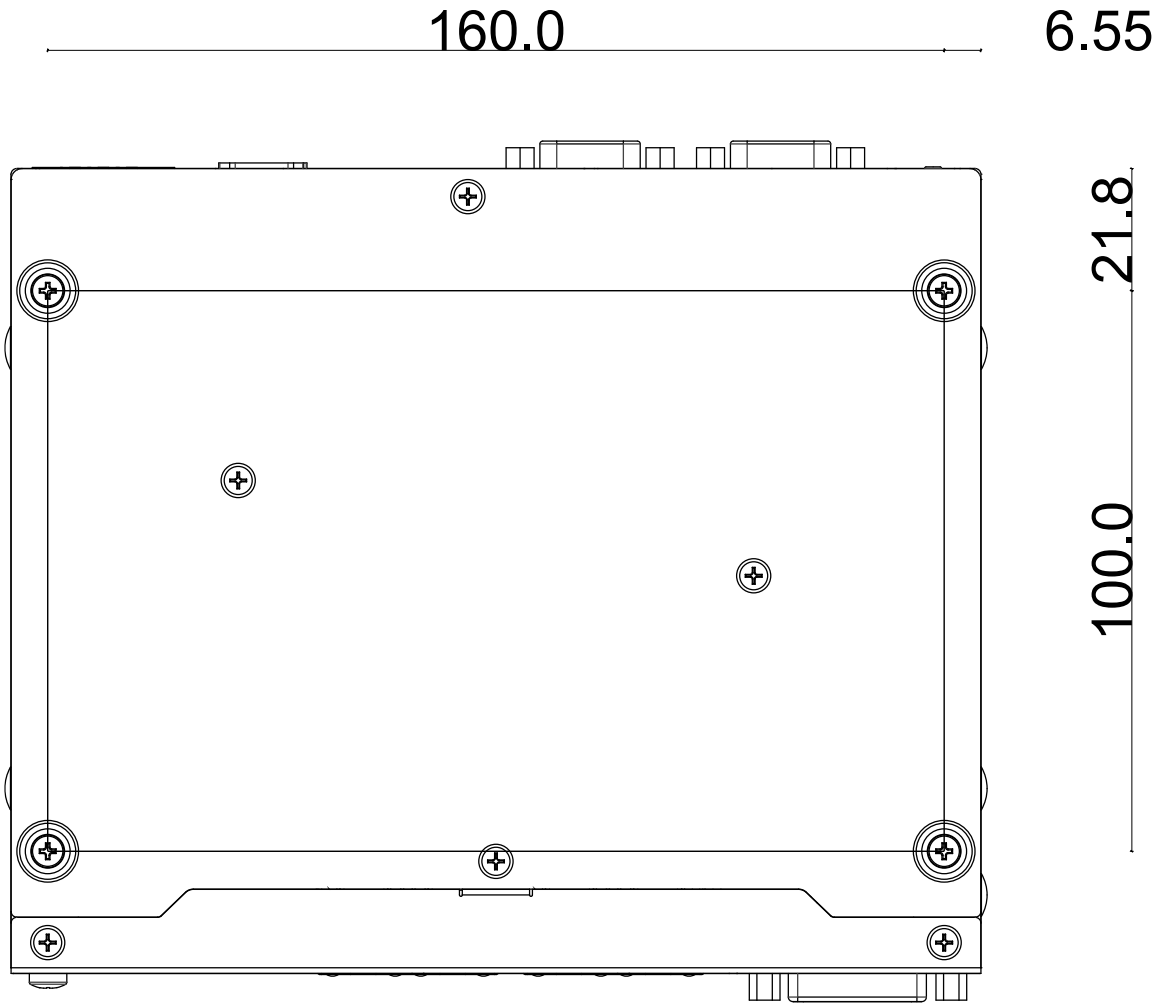

1.3.5 Fan Kit Dimensions

NOTE

Fan kit is an optional accessory.

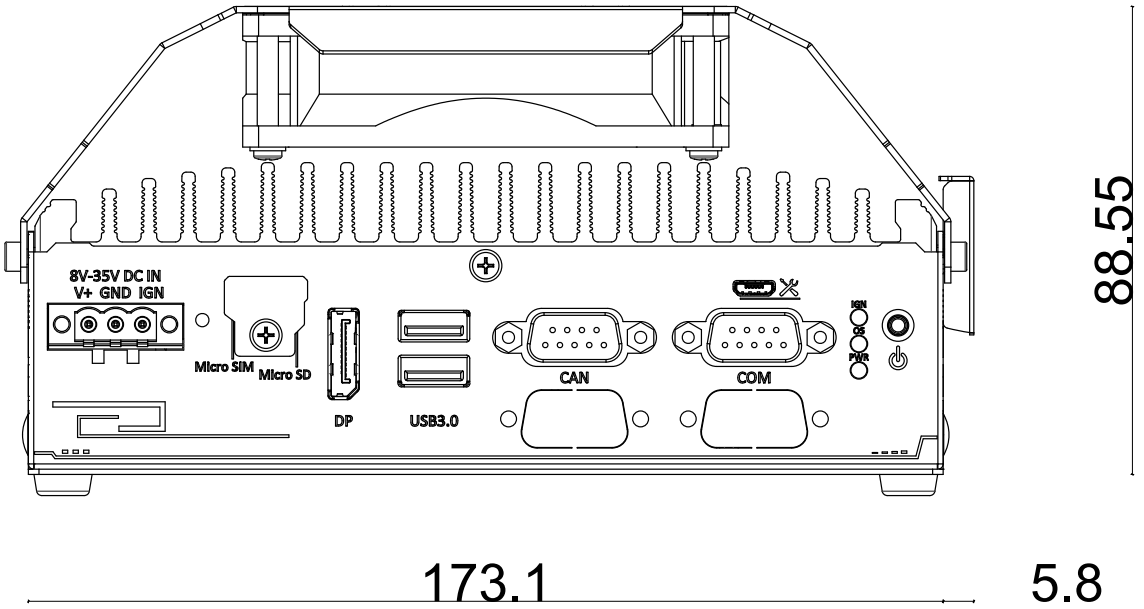

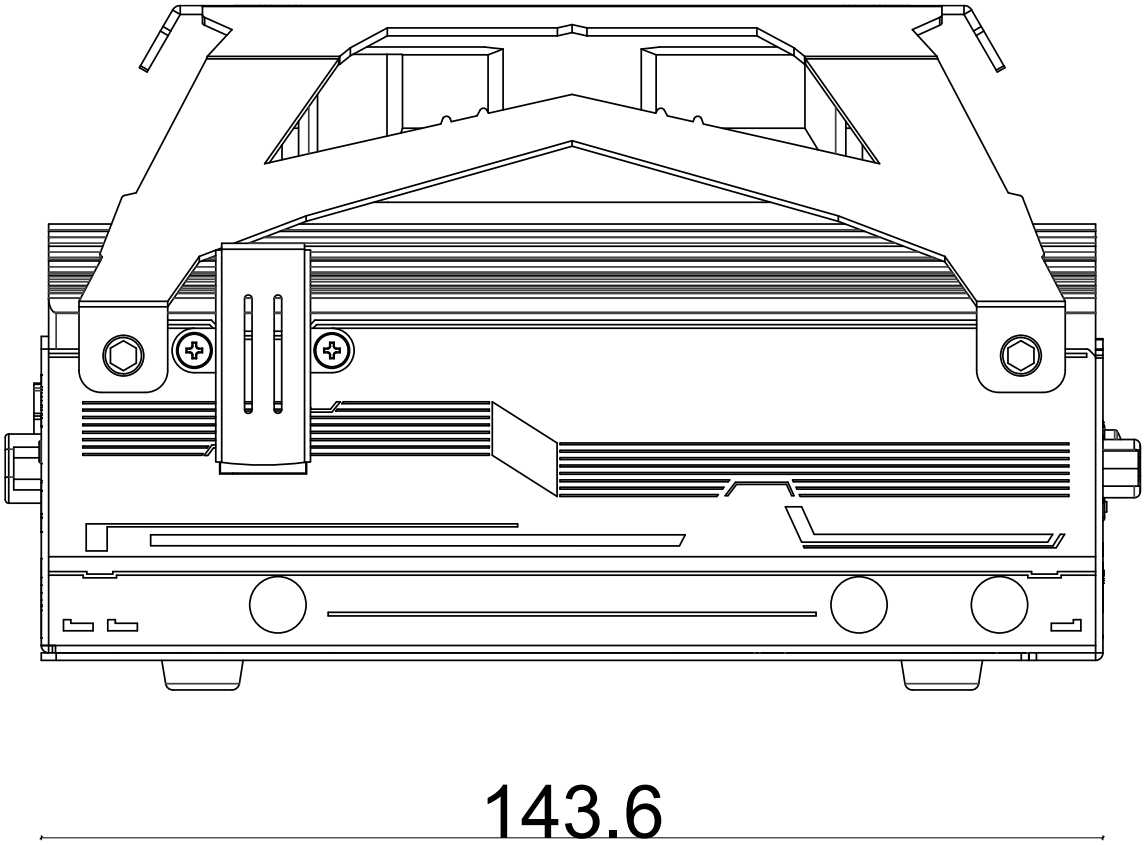

2 System Overview

Upon receiving and unpacking your NRU-52S series systems, please check immediately if the package contains all the items listed in the following table. If any item(s) are missing or damaged, please contact your local dealer or Neousys Technology.

2.1 NRU-52S Packing List

Item	Description	Qty
1	NRU-52S series system (If you ordered SSD/ HDD or add-on module, please verify these items)	1
2	Accessory box, which contains ● 3-pin power terminal block ● Standoff, M3-5, H6.5, L4 for M.2 3042/ 3052 B key module ● Screw pack	 1 1 1

2.2 NRU-52S Series Front Panel

The front panel of the system features rich I/O ports, it has a 3-pin terminal block for DC input, Micro SIM slot, Micro SD slot, DisplayPort, USB3.2 Gen1 (USB3.0), CAN bus, COM, system status LEDs and a power button.

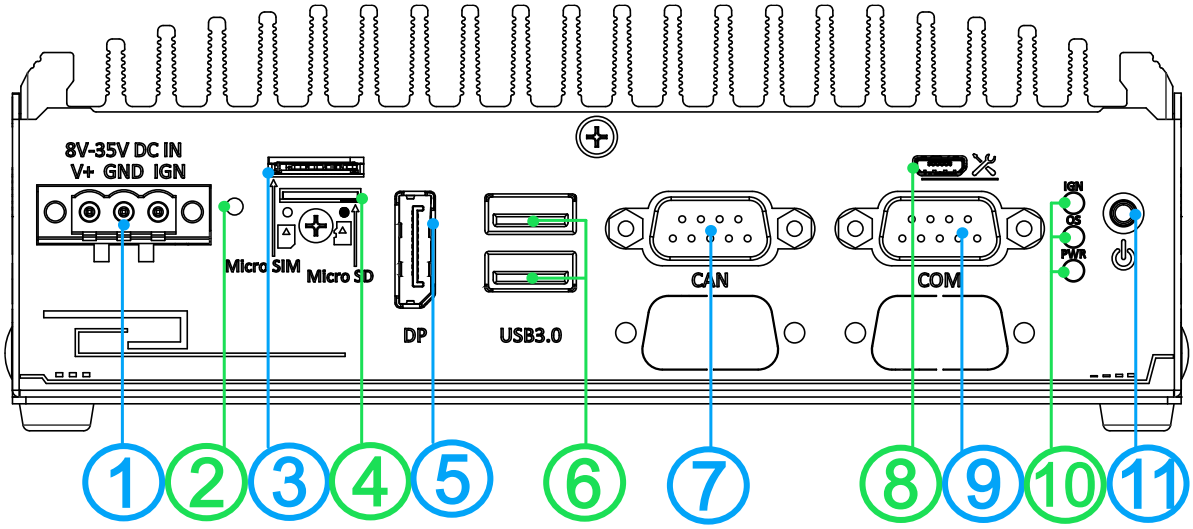

No.	Item	Description
1	3-pin terminal block (DC/ ignition control)	Compatible with DC power input from 8~35V, the terminal block is also used for ignition signal input
2	Force recovery button	Use for system recovery or system reflash purposes
3	Micro SIM slot	Couple with M.2 B key for LTE/ 5G NR
4	MicroSD slot	Reserved for ODM purposes with Xavier NX
5	DisplayPort output	The DisplayPort is a high-resolution graphics output supporting up to 3840 x 2160 @ 60Hz
6	USB 3.2 Gen1 ports	USB 3.2 Gen1 ports, up to 5 Gbit/s data transfer bandwidth (shared with the internal M.2 B key)
7	CAN bus port	Compatible with both industrial and in-vehicle applications, it supports CAN2.0A and CAN2.0B up to 1Mbps
8	micro-USB port	The micro-USB port is reserved for system reflash purposes
9	COM port	For communicating with external devices
10	System status LED	Three system LEDs, ignition control (IGN), (OS), and power (PWR)
11	Power button	Use this button to turn on or shutdown the system

2.2.1 3-pin Terminal Block for DC and Ignition Control

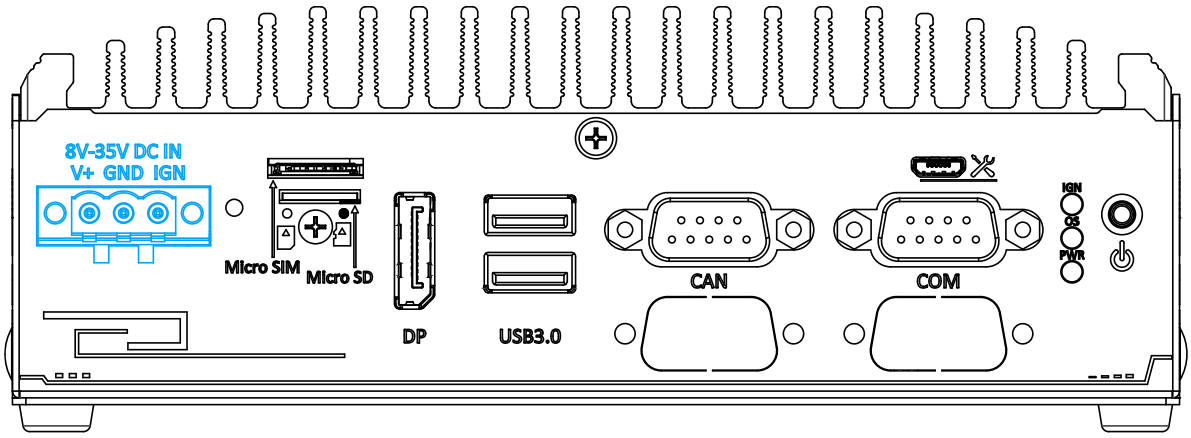

The system allows an 8 to 35V DC power input from via a 3-pin pluggable terminal block. The screw clamping mechanism is a reliable way to wire DC power. In addition to DC power, this terminal block also accepts ignition signal input (IGN).

> **WARNING**
>
> *Please make sure the voltage of DC power is correct before you connect it to the system. Supplying a voltage over 35V will damage the system.*

2.2.2 Force Recovery Button

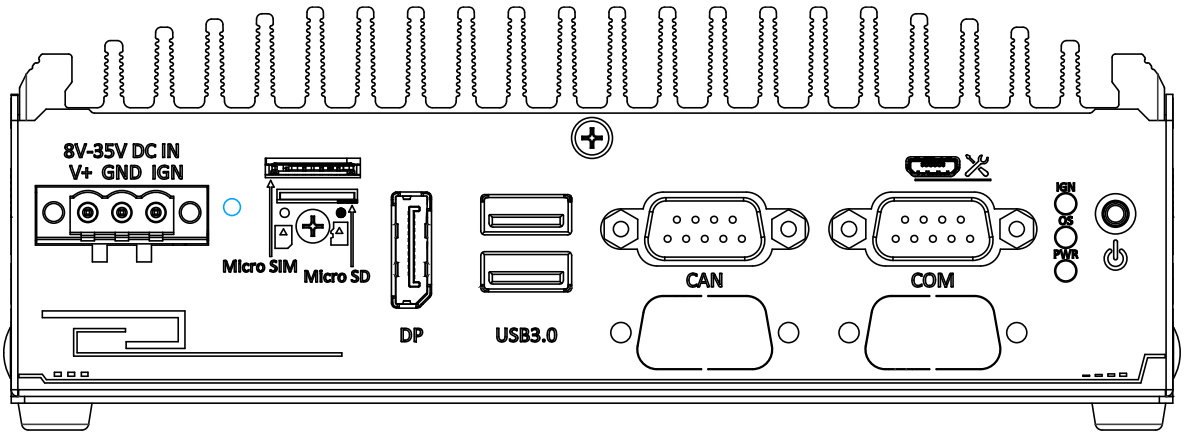

The force recovery button is reserved for engineering or system reflash purposes.

2.2.3 Micro SIM Slot

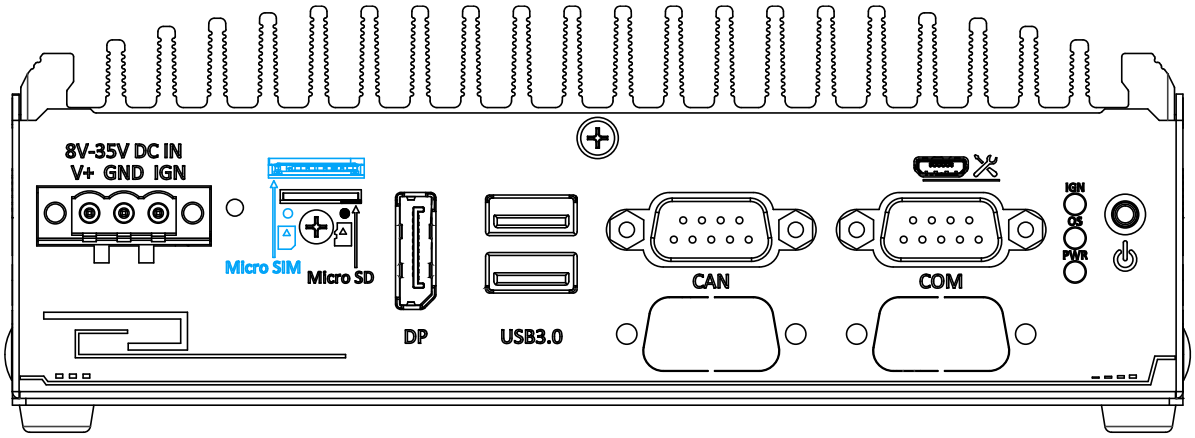

The Micro SIM slot can be coupled with the M.2 B key and five antenna holes for 4G LTE or 5G NR module expansion.

2.2.4 MicroSD Slot

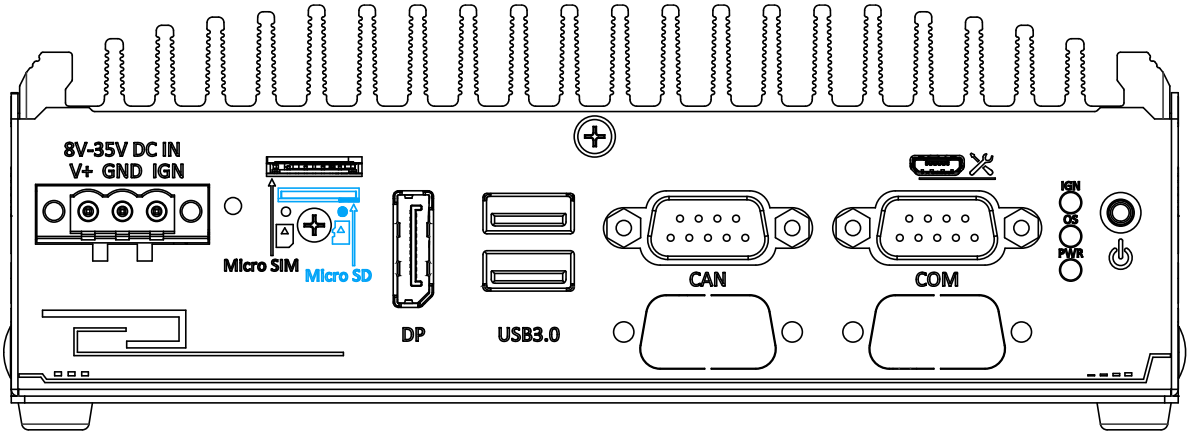

Reserved for ODM purposes with Xavier NX. No function for standard systems.

2.2.5 DisplayPort

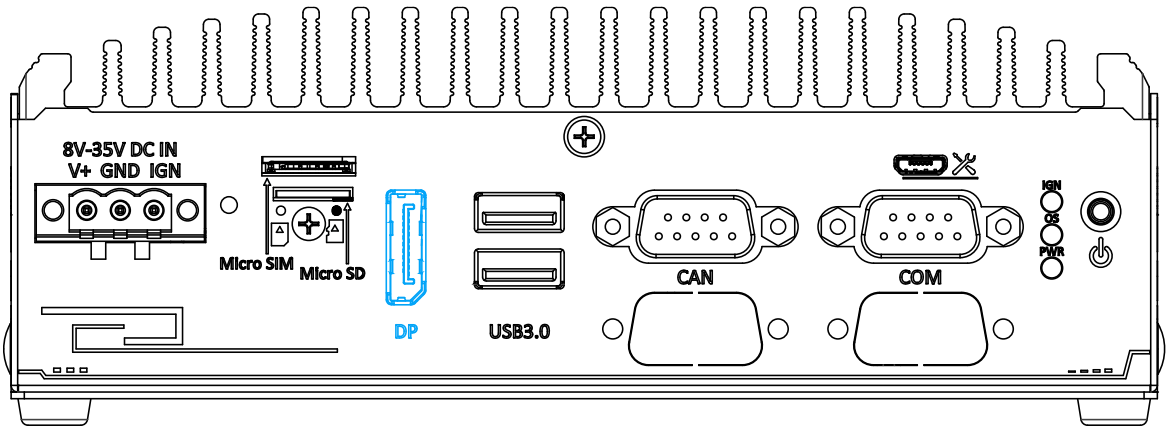

The system has a DisplayPort (DP) output which is a digital display interface that mainly connect video source and carry audio to a display device. When connecting a DP, it can deliver up to 4K UHD (3840 x 2160 @ 60Hz) in resolution. The system is designed to support active DP adapter/ cable from NVIDIA's recommended display adapters. You may refer to NVIDIA's page to find more information

(https://nvidia.custhelp.com/app/answers/detail/a_id/4449/~/nvidia-recommended-display-adapters)

2.2.6 USB3.2 Gen1 Ports

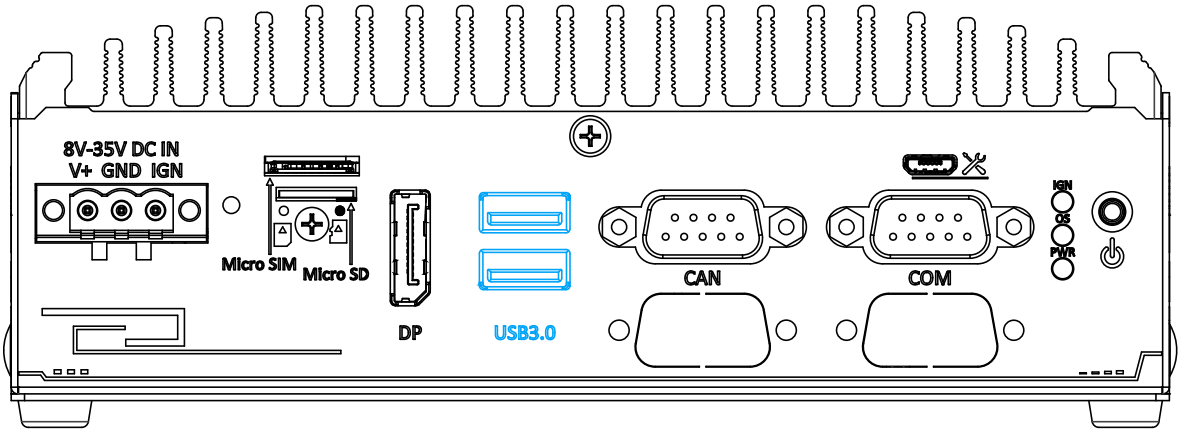

The system offers two USB 3.2 Gen1 (SuperSpeed USB) ports on its front panel. They are backward compatible with USB 2.0, USB 1.1 and USB 1.0 devices. The ports have a combined total bandwidth of 5Gbps that is shared with the internal M.2 B key.

2.2.7 CAN bus Port

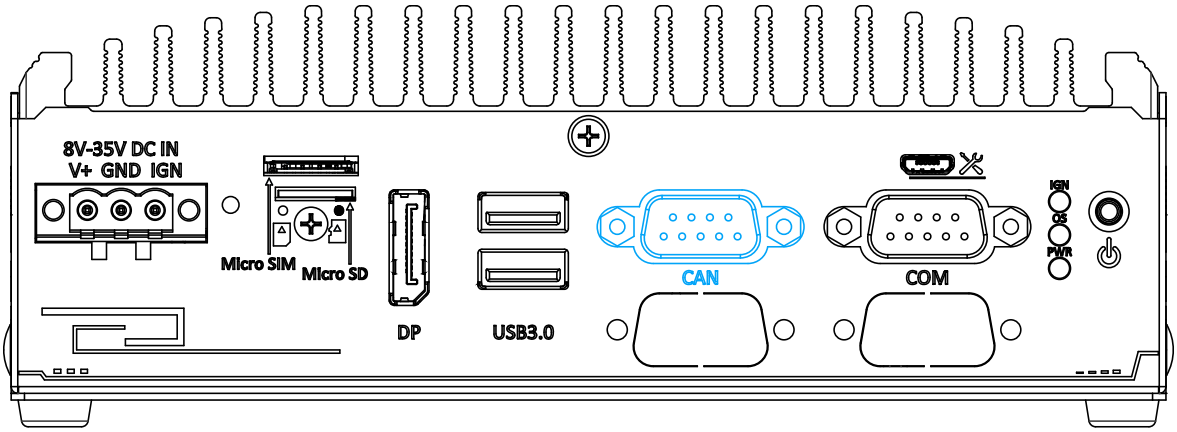

CAN bus is a robust industrial bus with a pair of differential signals and is commonly used in various industrial and in-vehicles applications. The system is equipped with a CAN bus DB9 port that is compatible with both industrial and in-vehicle applications. The CAN bus port supports CAN2.0A and CAN2.0B up to 1Mbps.

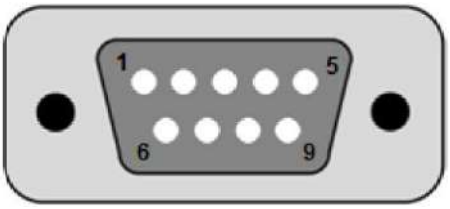

Pin No.	Definition	I/O	Description
1	GND	-	GND
2	Reserved	-	Reserved pin. Keep unconnected
3	CAN_H	I/O	CAN Bus High-level voltage
4	Reserved	-	Reserved pin. Keep unconnected
5	CAN_L	I/O	CAN Bus Low-level voltage
6	Reserved	-	Reserved pin. Keep unconnected
7	Reserved	-	Reserved pin. Keep unconnected
8	Reserved	-	Reserved pin. Keep unconnected
9	Reserved	-	Reserved pin. Keep unconnected

2.2.8 MicroUSB Port

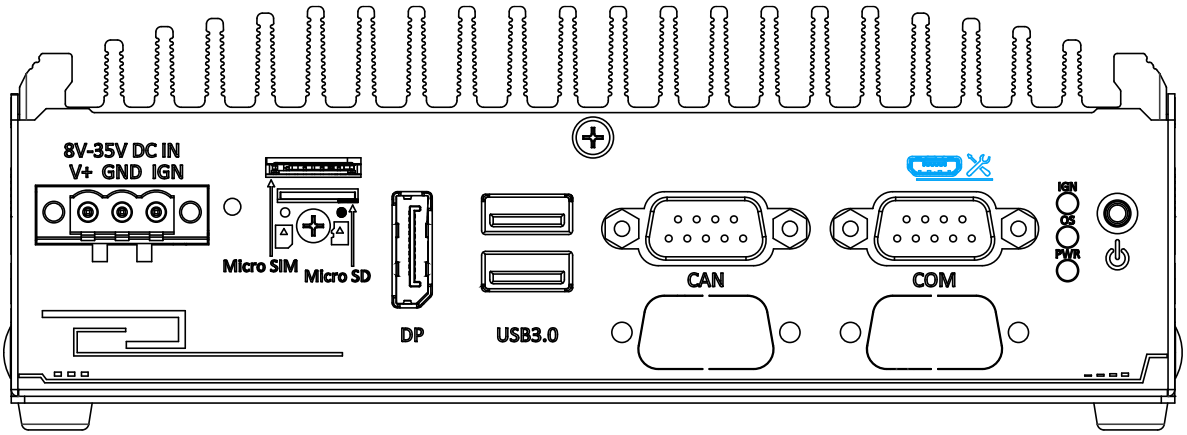

Reserved for system maintenance only.

2.2.9 COM Port

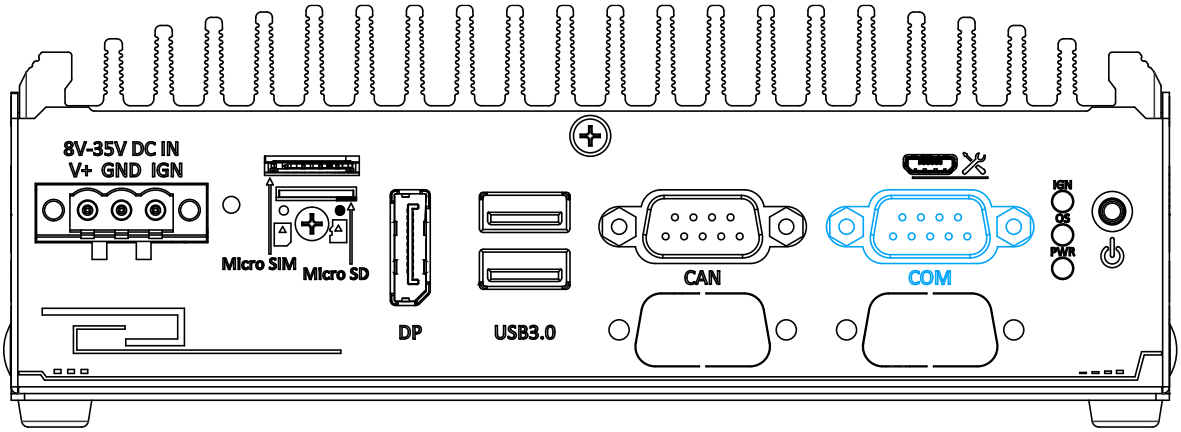

The COM port is implemented via the NVIDIA Jetson module and can provide up to 115200 bps baud rate.

The COM port is a DIP switch configurable RS-232/422/485 port. The operation mode can be set via the DIP switch. The following table describes the pin definition of COM ports.

For detail COM port configuration, please click on this link for more information.

COM Port Pin Definition

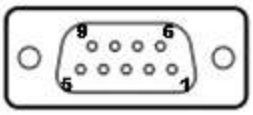

Pin#	RS-232 Mode	RS-422 Mode	RS-485 Mode (Two-wire 485)
1			
2	RX	TXD+	TXD+/RXD+
3	TX	RXD+	
4		RXD-	
5	GND	GND	GND
6			
7			
8		TXD-	TXD-/RXD-
9			

2.2.10 System Status LEDs

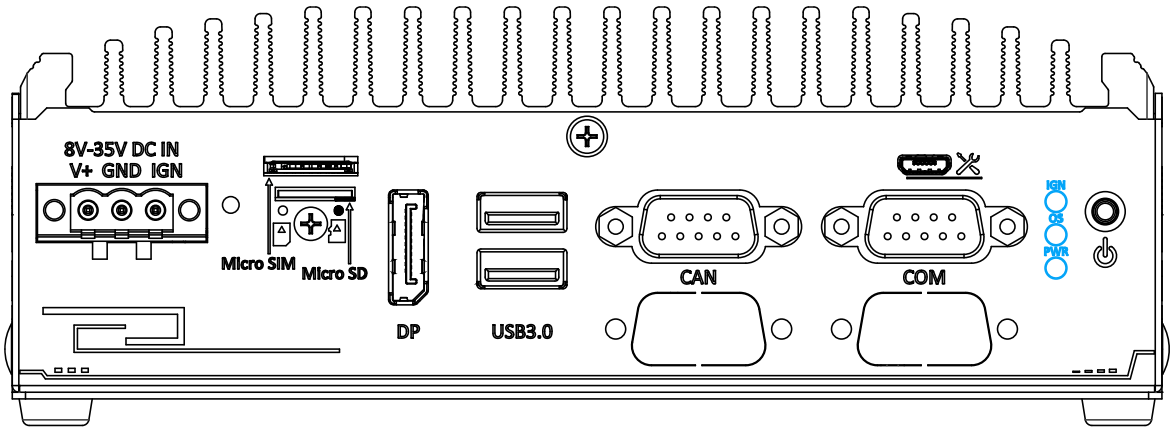

There are three LED indicators on the front panel: IGN, OS and PWR. The descriptions of these LEDs are listed in the following table.

Indicator	Color	Description
IGN	Yellow	Ignition power control, lit when IGN signal is applied.
OS	Red	Lit when Jetson module is powered on, and booted into device tree
PWR	Green	Power indicator, lit when the PCBA is powered on

2.2.11 Power Button

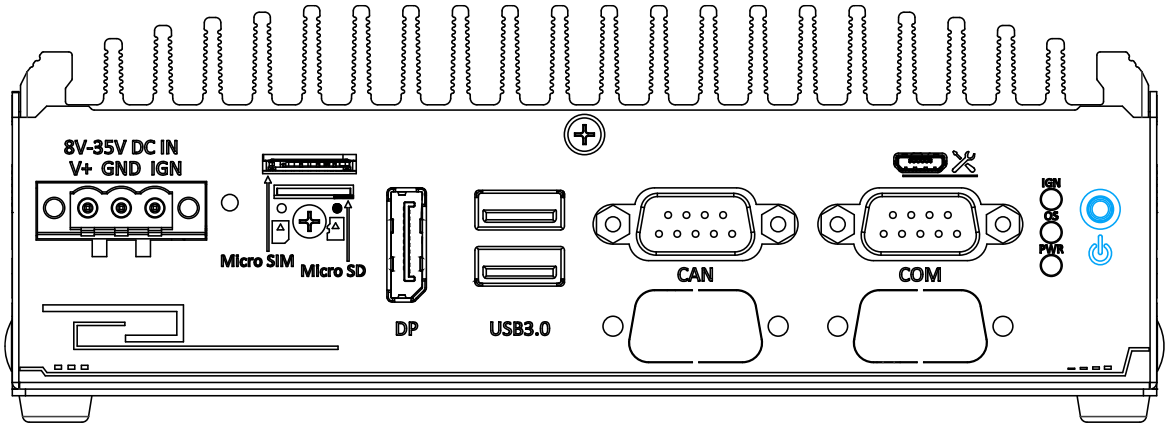

The power button is a non-latched switch for ATX mode on/off operation. Press to turn on the system, PWR LED should light up and to turn off, you can either issue a shutdown command in the OS, or just press the power button. In case of system halts, you can press and hold the power button for 5 seconds to force-shutdown the system. Please note that there is a 5 seconds interval between two on/off operations (i.e. once turning off the system, you will need to wait for 5 seconds to initiate another power-on operation).

2.3 NRU-52S Series Rear Panel

The rear panel of NRU-52S systems feature a DIO & GPS PPS and four PoE ++ ports.

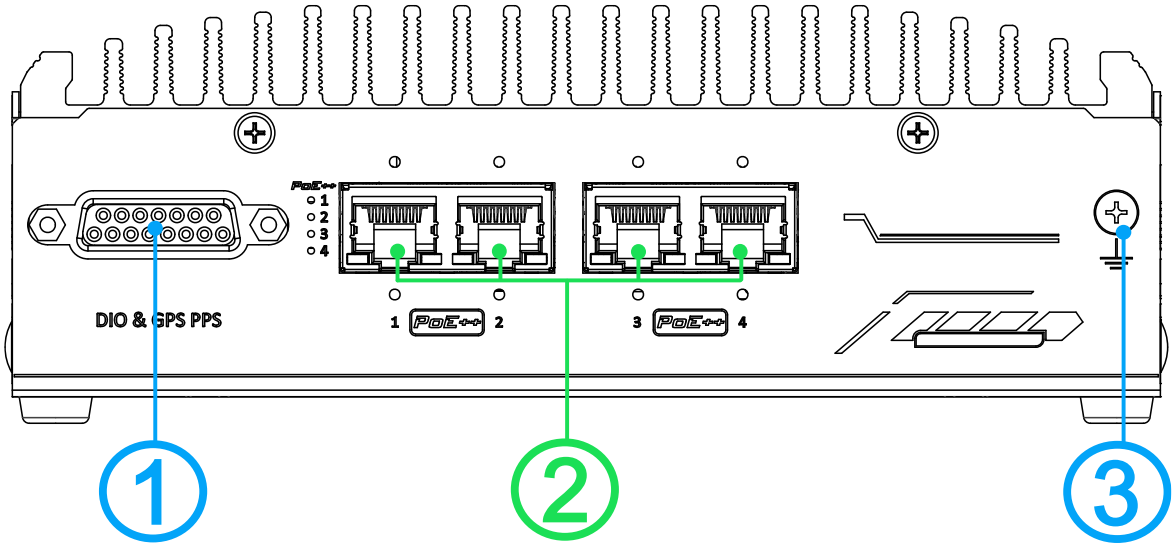

No.	Item	Description
1	DIO & GPS PPS port	The DIO port provides 1x GPS PPS input, 3-CH isolated DI and 4-CH isolated DO
2	Gigabit PoE++ ports	Gigabit PoE++ port can provide both data and electric power to devices.
3	Grounding point	Chassis grounding point

2.3.1 DIO & GPS PPS Port

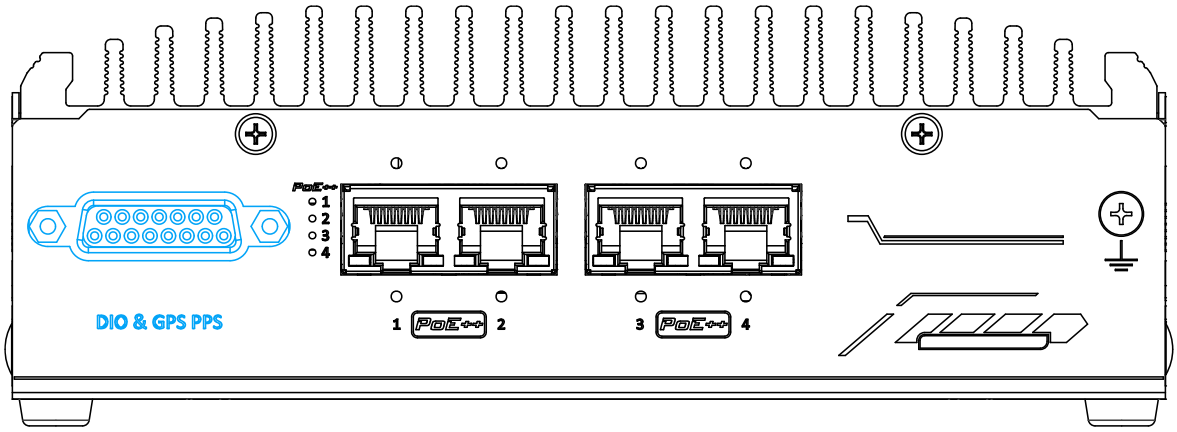

The system provides 1x GPS PPS input, 3-CH isolated DI and 4-CH isolated DO output channels. The DO is followed by open-drain design, i.e., the output voltage is decided by the external power source. And we recommended to design the external power source between 5V to 24V. The DI treat 0 to 1.5V voltage input as 0, and treat 5 to 24V voltage input as 1. In Linux, each GPIO is mapped to a virtual folder. And the PPS0 is defined in our official device tree. Please refer to **the following table** for information on wiring and programming the isolated DIO channels.

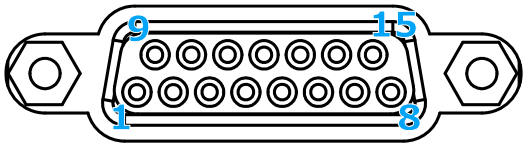

Pin No.	Definition	I/O	Description
1	PPS0_H	I	GPS PPS input
2	DI1_H	I	Digital input channel 1
3	DI1_L	I	Digital input channel 1
4	DO_COM	O	Common connection of DO
5	DO0	O	Digital output channel 0
6	DO1	O	Digital output channel 1
7	DO_COM	O	Common connection of DO
8	VDD	O	
9	PPS0_L	I	GPS PPS input
10	DI2_H	I	Digital input channel 2
11	DI3_H	I	Digital input channel 3
12	DO_COM	O	Common connection of DO
13	DO2	O	Digital output channel 2
14	DO3	O	Digital output channel 3
15	DI2_L, DI3_L	I	Digital input channel 2/ 3

For DIO/ GPS PPS controls, please refer to the following link:

https://neousys.gitbook.io/nru-series/nru50/io/dio

2.3.2 IEEE 802.3bt PoE ++ Port

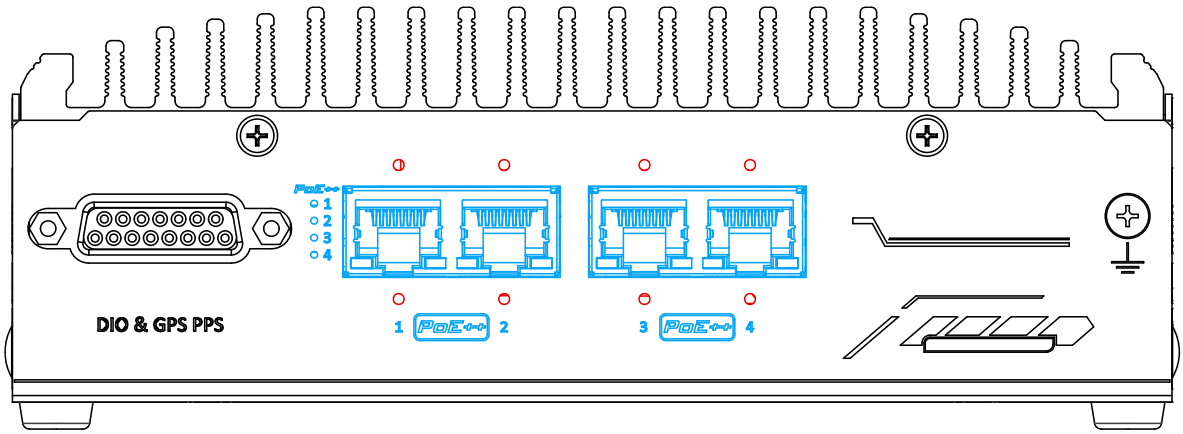

The Gigabit PoE ++ port supply power and data on a standard CAT-5 or better Ethernet cable. Acting as a PSE (Power Sourcing Equipment), compliant with IEEE 802.3bt, it has a total power budget of 144W while each port can deliver up to 90W to a Powered Device (PD). PoE automatically detects and determine if the connected device is PoE PD or not before supplying power, making it compatible with standard Ethernet devices as well. There are screw-lock holes (indicated in **red**) for each port to ensure cables are tightly secured.

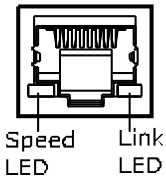

Active/Link LED

LED Color	Status	Description
Orange	Off	Ethernet port is disconnected
	On	Ethernet port is connected and no data transmission
	Flashing	Ethernet port is connected and data is transmitting/receiving

Speed LED

LED Color	Status	Description
Orange	Off	Not connected
	Orange	10/ 100/ 1000 Mbps

2.3.3 Grounding Point

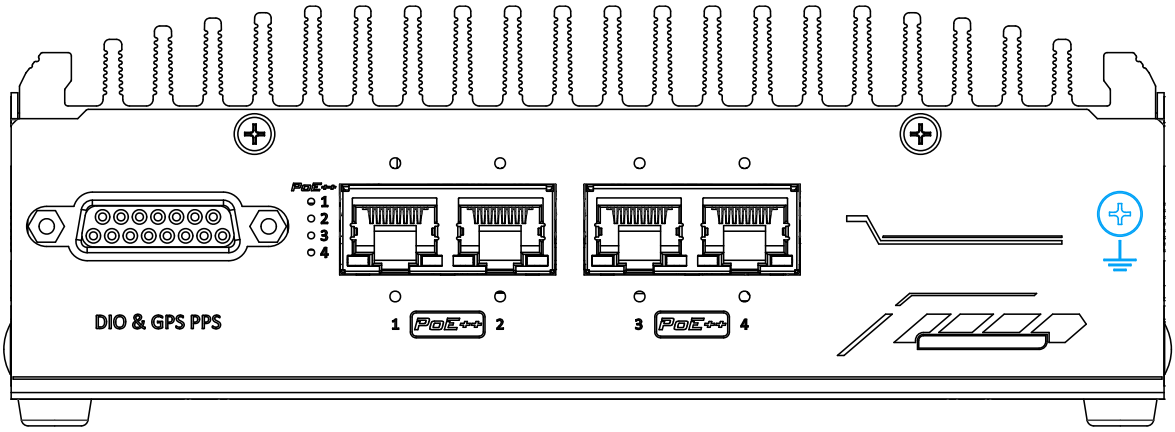

The system offers EMI protection with an isolated PCB design. If you are powering the NRU-52S using an isolated power supply, please make sure the chassis grounding point is connected.

2.4 Internal I/O

The system's internal I/O connectors consist of an M.2 B key slot 5G/4G wireless communication module, and two mini PCIe slots for wireless or storage modules.

2.4.1 M.2 B Key 2242/ 3042/ 3052 & SIM Slots

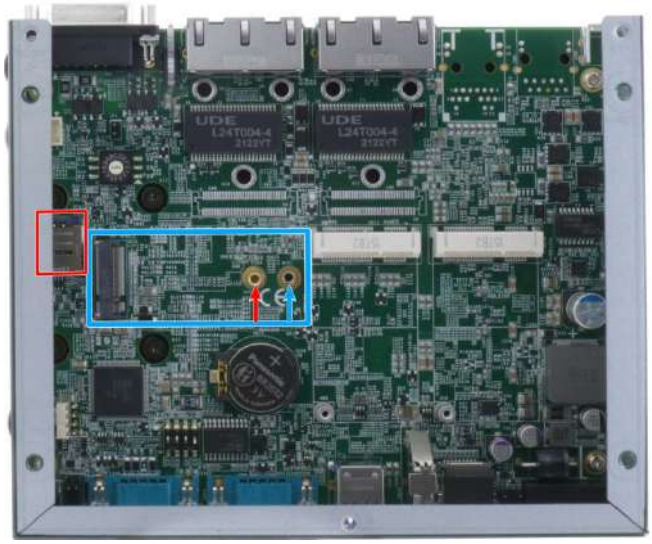

M.2 B key and internal SIM card slot

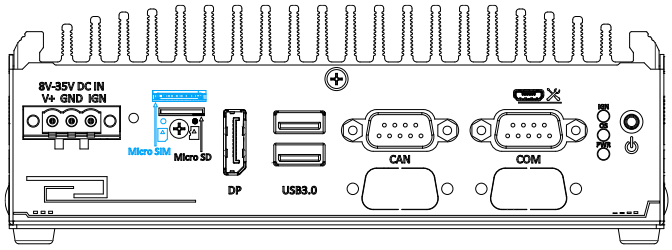

SIM card slot on panel

The system has an M.2 2242/ 3042/ 3052 slot (indicated in **blue rectangle**) with dual SIM slots (one indicated in **red rectangle**, one situated in the front panel) supporting 5G/ 4G. A copper standoff is provided for you to secure onto the motherboard into the **red arrow** location for an M.2 2242/ 3042 module, or into the **blue arrow** location for an M.2 3052 module. By installing a 5G or 4G M.2 module and SIM card, you can access the internet via the provider's network. For wireless 5G/ 4G, SMA antenna apertures are located on side panels.

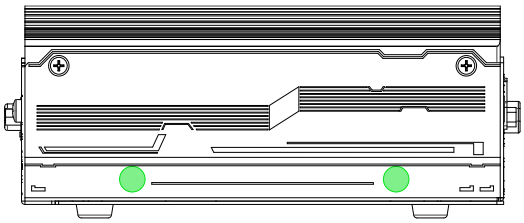

Right side

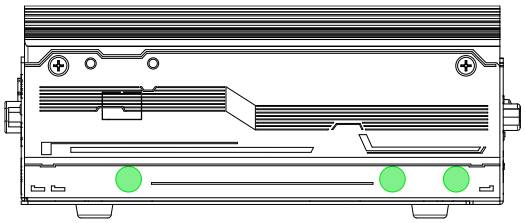

Left side

M.2 (B Key) Slot Pin Definition

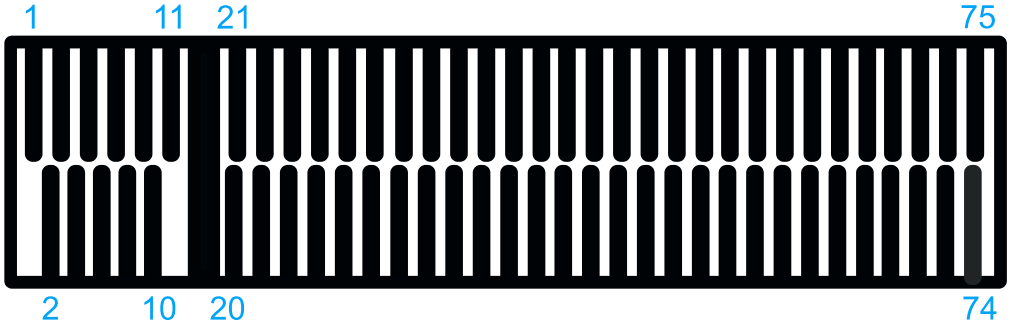

Pin #	Signal	Pin #	Signal
1	-	**2**	+3V3
3	GND	**4**	+3V3
5	GND	**6**	FULL_CARD_POWER_OFF_N
7	USB_D+	**8**	W_DISABLE_N
9	USB_D-	**10**	-
11	GND		
Mechanical Key			
21	-	**20**	-
23	-	**22**	-
25	-	**24**	-
27	GND	**26**	-
29	USB3.0-RX-	**28**	-
31	USB3.0-RX+	**30**	UIM1-RESET
33	GND	**32**	UIM1-CLK
35	USB3.0-TX-	**34**	UIM1-DATA
37	USB3.0-TX+	**36**	UIM1-PWR
39	GND	**38**	-
41	-	**40**	UIM2-DET
43	-	**42**	UIM2-DATA
45	GND	**44**	UIM2-CLK
47	-	**46**	UIM2-RST
49	-	**48**	UIM2-PWR
51	GND	**50**	-
53	-	**52**	-
55	-	**54**	-
57	GND	**56**	-
59	-	**58**	-
61	-	**60**	-
63	-	**62**	-
65	-	**64**	-
67	RESET_N	**66**	-
69	-	**68**	-
71	GND	**70**	+3V3
73	GND	**72**	+3V3
75	-	**74**	+3V3

2.4.2 mini-PCIe Slots for NRU-52S+

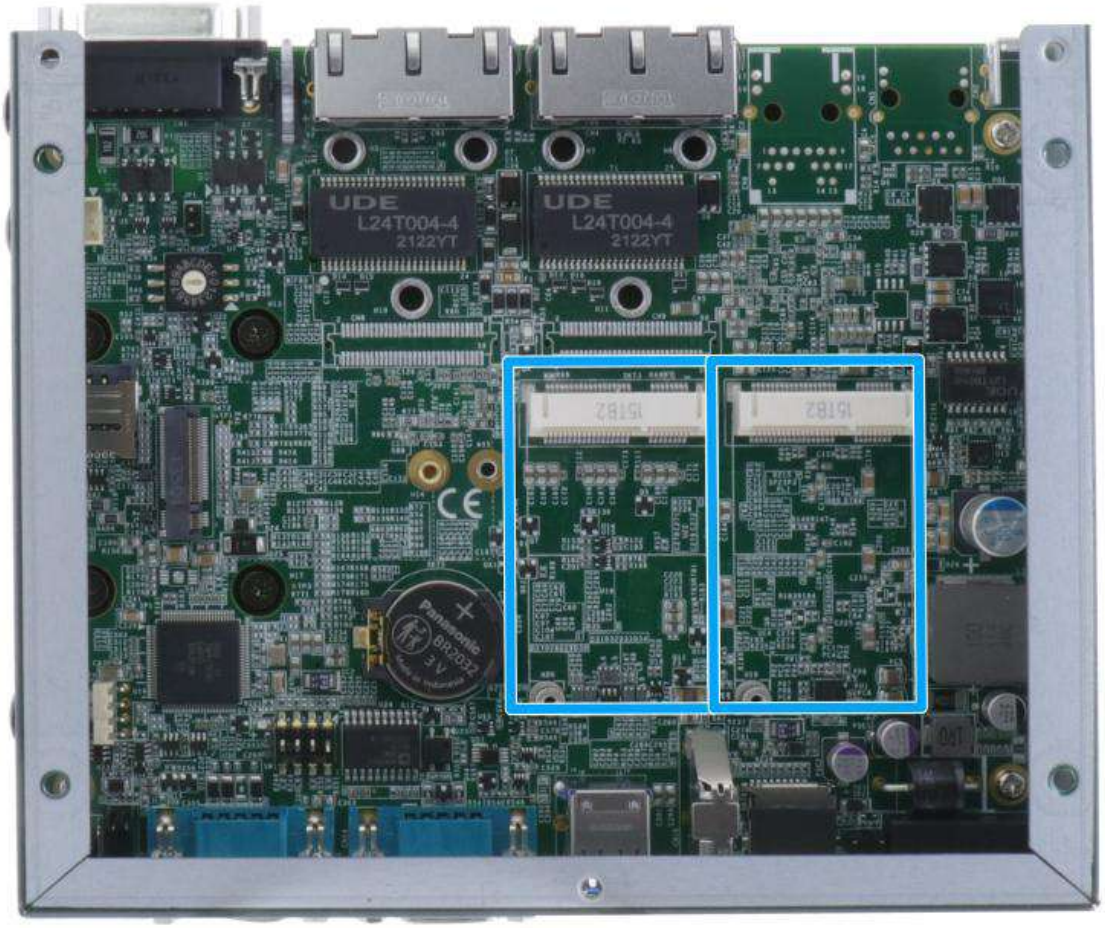

The mini-PCIe sockets (in **blue**) offer both PCIe and USB2.0 signals and accept off-the-shelf mini-PCIe modules. You can add additional features to your system such as 5G/ 4G, WiFi, GPS, CAN bus, analog frame grabber, etc.

For wireless (WIFI/ 3G/ 4G) communication, multiple SMA antenna apertures can be located on the rear panel.

For wireless modules, SMA antenna apertures are located on side panels.

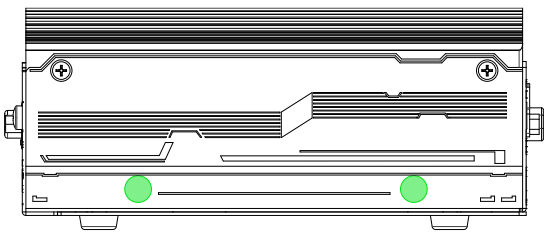

Right side

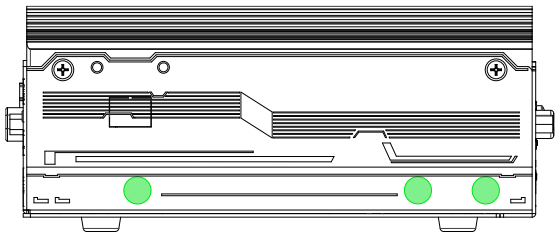

Left side

mini-PCIe Pin Definition

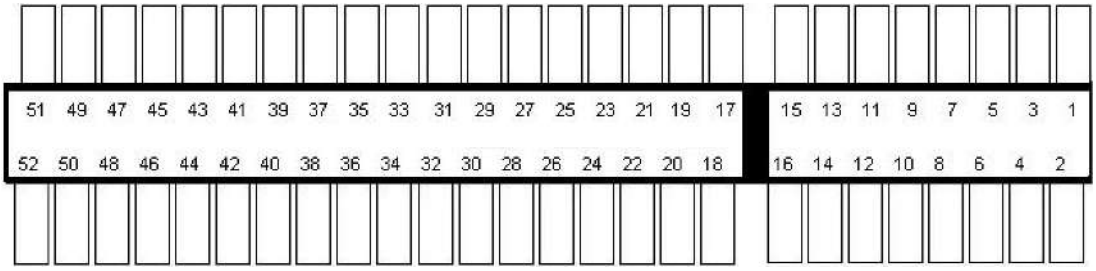

Pin #	Signal	Pin #	Signal
1	WAKE_N	2	P3V3
3	-	4	GND
5	-	6	P1V5
7	CLKREQ_N	8	-
9	GND	10	-
11	REFCLK-	12	-
13	REFCLK+	14	-
15	GND	16	-
Mechanical Key			
17	-	18	GND
19	-	20	-
21	GND	22	PERS_N
23	PERn0	24	P3V3
25	PERp0	26	GND
27	GND	28	P1V5
29	GND	30	SMB_CLK
31	PETn0	32	SMB_DATA
33	PETp0	34	GND
35	GND	36	USB_D-
37	GND	38	USB_D+
39	P3V3	40	GND
41	P3V3	42	-
43	GND	44	-
45	Reserved	46	-
47	Reserved	48	P1V5
49	Reserved	50	GND
51	-	52	P3V3

WARNING

Some off-the-shelf mini-PCIe 4G modules are not compliant to standard mini-PCIe interface. They use 1.8V I/O signals instead of standard 3.3V I/O and may have signal conflict. Please consult with Neousys for compatibility when in doubt!

2.4.3 mini-PCIe Slots for NRU-52S

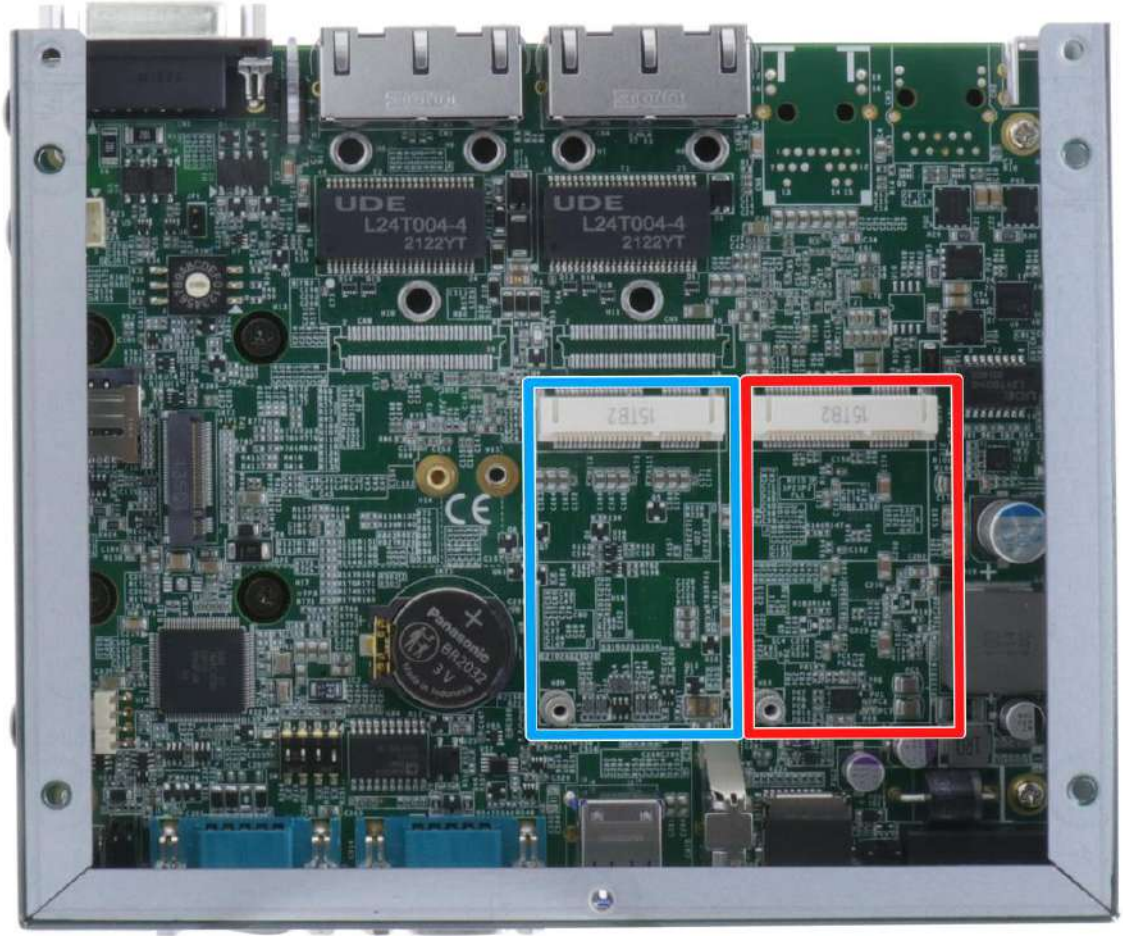

The mini-PCIe socket (in **blue**) offers USB2.0 signal and the mini-PCIe socket (in **red**) offers PCIe and USB2.0 signal. You can add additional features to your system such as 5G/ 4G, WiFi, GPS, CAN bus, analog frame grabber, etc.

For wireless (WiFi/ 5G/ 4G) communication, multiple SMA antenna apertures can be located on the rear panel.

For wireless modules, SMA antenna apertures are located on side panels.

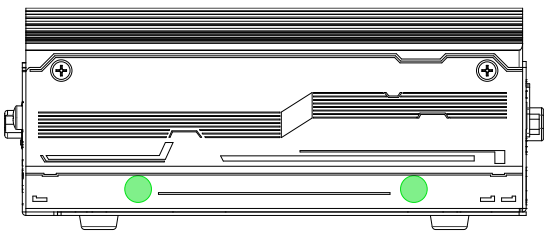

Right side

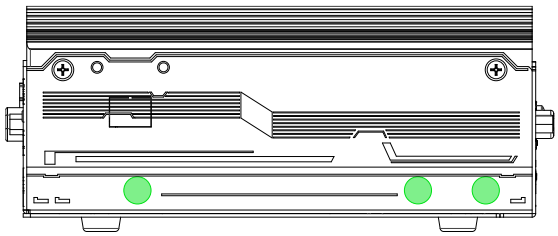

Left side

mini-PCIe Pin Definition (in Blue)

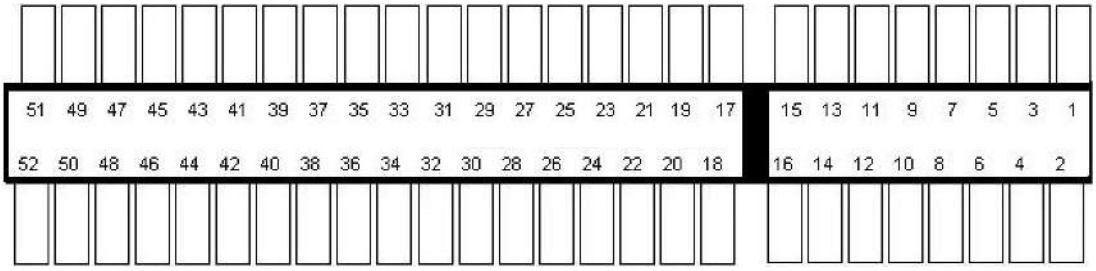

Pin #	Signal	Pin #	Signal
1	-	2	P3V3
3	-	4	GND
5	-	6	P1V5
7	-	8	-
9	GND	10	-
11	-	12	-
13	-	14	-
15	GND	16	-
Mechanical Key			
17	-	18	GND
19	-	20	-
21	GND	22	-
23	-	24	P3V3
25	-	26	GND
27	GND	28	P1V5
29	GND	30	SMB_CLK
31	-	32	SMB_DATA
33	-	34	GND
35	GND	36	USB_D-
37	GND	38	USB_D+
39	P3V3	40	GND
41	P3V3	42	-
43	GND	44	-
45	Reserved	46	-
47	Reserved	48	P1V5
49	Reserved	50	GND
51	-	52	P3V3

WARNING

Some off-the-shelf mini-PCIe 4G modules are not compliant to standard mini-PCIe interface. They use 1.8V I/O signals instead of standard 3.3V I/O and may have signal conflict. Please consult with Neousys for compatibility when in doubt!

mini-PCIe Pin Definition (in Red)

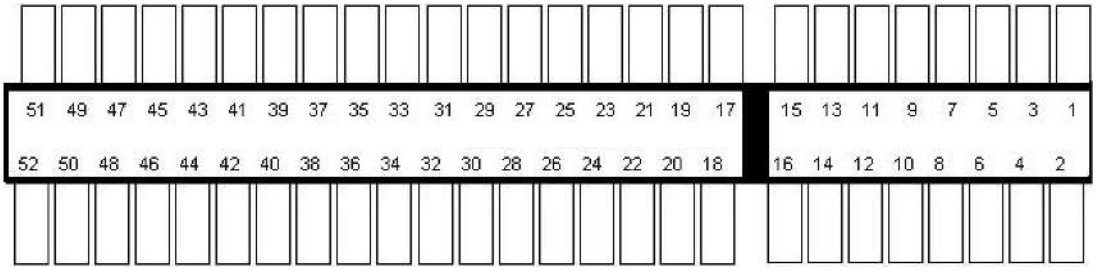

Pin #	Signal	Pin #	Signal
1	WAKE_N	2	P3V3
3	-	4	GND
5	-	6	P1V5
7	CLKREQ_N	8	-
9	GND	10	-
11	REFCLK-	12	-
13	REFCLK+	14	-
15	GND	16	-
Mechanical Key			
17	-	18	GND
19	-	20	-
21	GND	22	PERS_N
23	PERn0	24	P3V3
25	PERp0	26	GND
27	GND	28	P1V5
29	GND	30	SMB_CLK
31	PETn0	32	SMB_DATA
33	PETp0	34	GND
35	GND	36	USB_D-
37	GND	38	USB_D+
39	P3V3	40	GND
41	P3V3	42	-
43	GND	44	-
45	Reserved	46	-
47	Reserved	48	P1V5
49	Reserved	50	GND
51	-	52	P3V3

WARNING

Some off-the-shelf mini-PCIe 4G modules are not compliant to standard mini-PCIe interface. They use 1.8V I/O signals instead of standard 3.3V I/O and may have signal conflict. Please consult with Neousys for compatibility when in doubt!

2.4.4 DIP Switch for COM Port Configuration

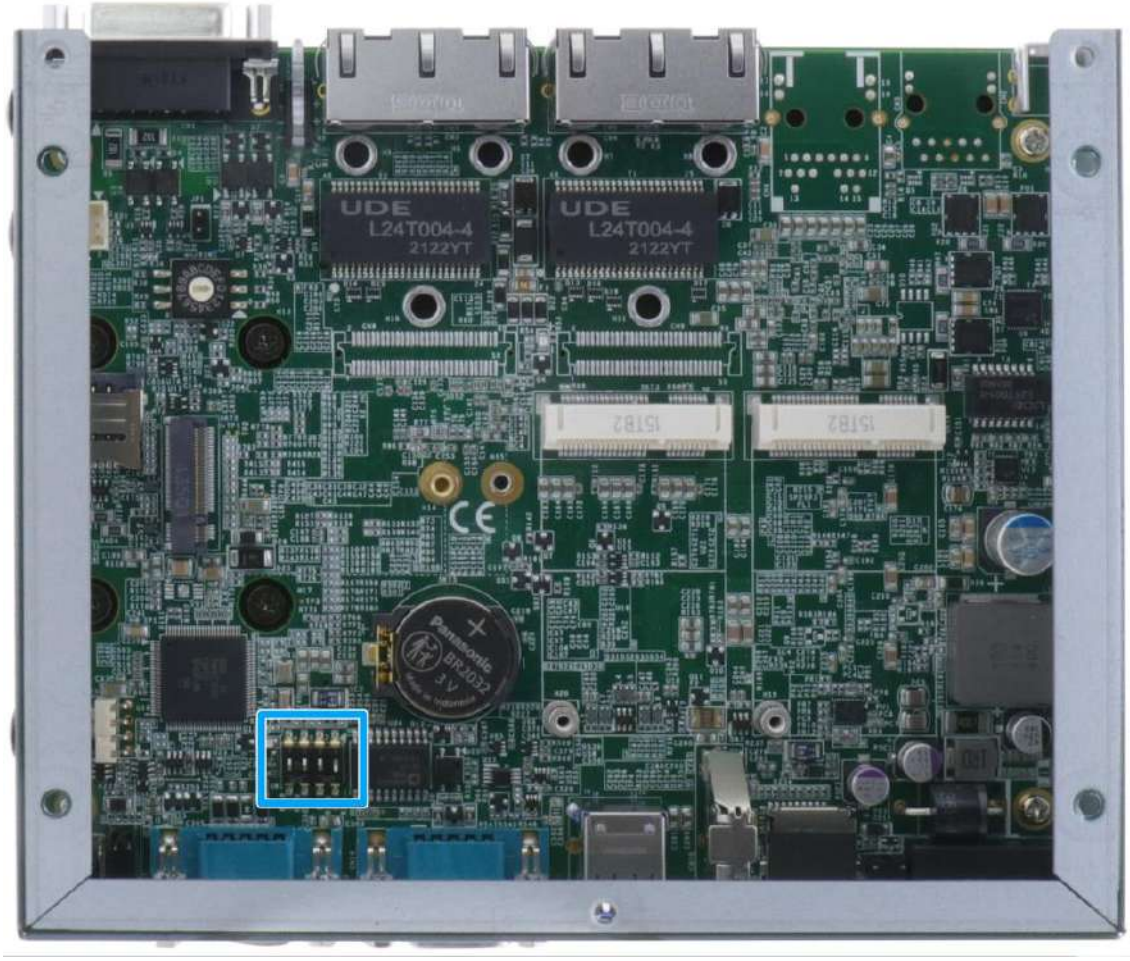

The COM port configuration is controlled by DIP switches 1 and 2, while termination and slew rate are set via DIP switches 3 and 4.

DIP switch / Mode	DIP switch setting	DIP switch / Mode	DIP switch setting
RS-232	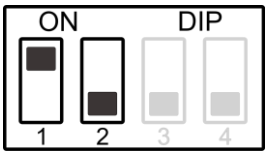	Enabling termination (DIP3) for RS-422/ 485	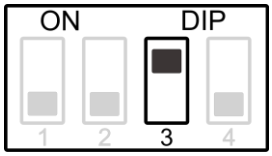
RS-485 half duplex	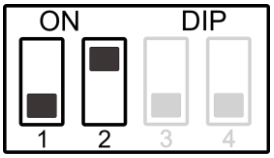	Enabling slew rate (DIP4)	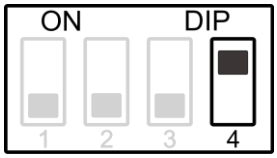
RS-422 full duplex	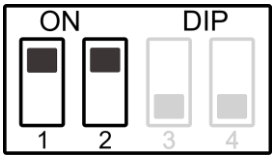		

3 System Installation

Before disassembling the system enclosure and installing components and modules, please make sure you have done the following:

- It is recommended that only qualified service personnel should install and service this product to avoid injury or damage to the system.
- Please observe all ESD procedures at all times to avoid damaging the equipment.
- Before disassembling your system, please make sure you have the module/ component you wish to install at hand and have all the necessary tools.
- Before disassembling your system, please make sure the system has powered off, all cables and antenna (power, video, data, etc.) are disconnected.
- Place the system on a flat and sturdy surface (remove from mounts or out of server cabinets) before proceeding with the installation/ replacement procedure.

NOTE

The internal heat spreader is designed for maximum heat dissipation by making contact with the corresponding module. If your module meets the following specifications, please consider purchasing the thermal pad kit (Tpkit-NRU-50).

M.2 B key module with a maximum height between 0.7mm to 2.0mm

mPCIe module with a maximum height between 1.3mm and 2.4mm

3.1 Disassembling the System Enclosure

To install internal components such as M.2 SSD or mini-PCIe module, you need to disassemble the system enclosure. Please refer to the following procedure:

1. Turn the system upside-down and remove the six screws indicated.

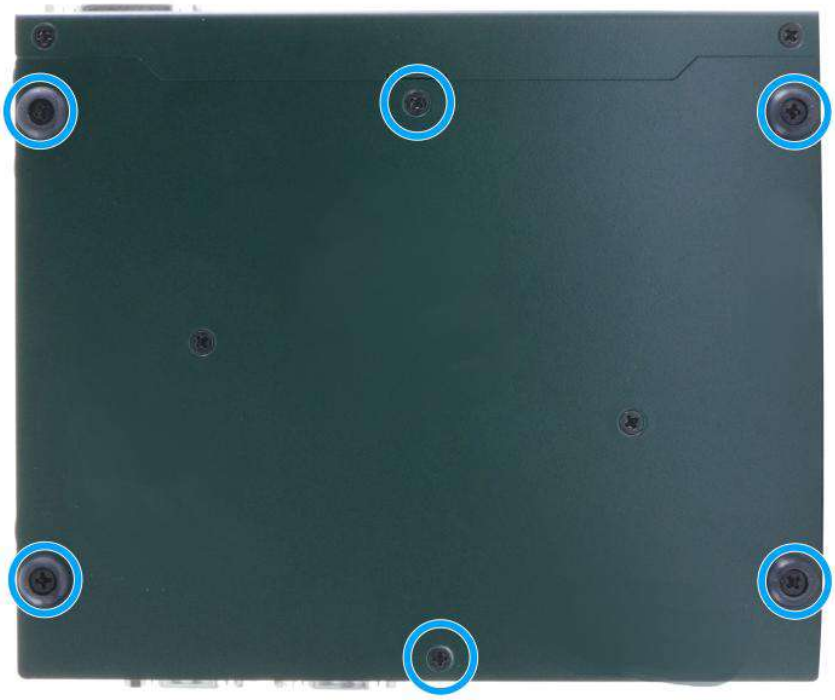

2. Gently lift the bottom panel open to access the internal expansion slots

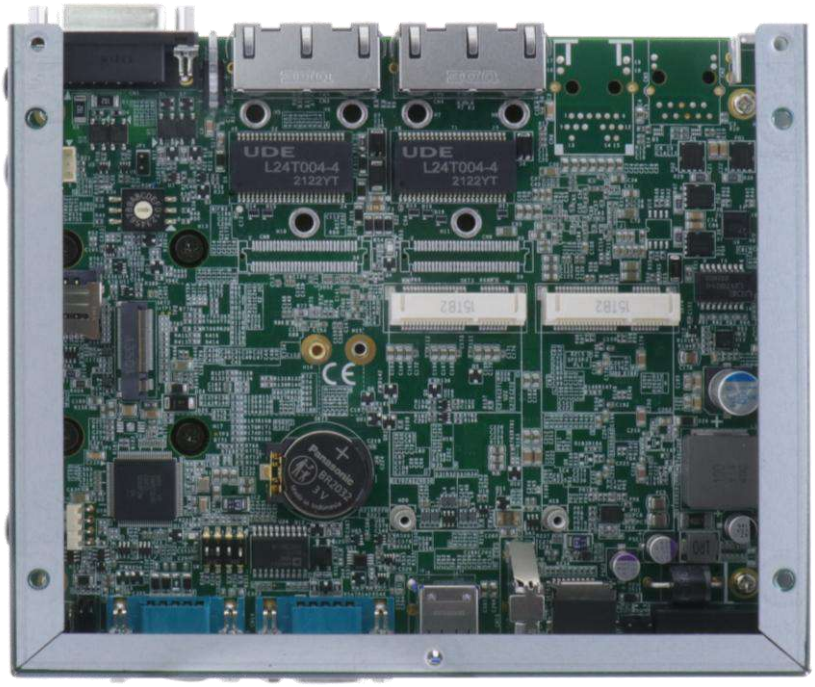

3.2 Installing Internal Components

3.2.1 M.2 B Key 2242/ 3042/ 3052 & SIM Card Installation

The system has an M.2 2242/ 3042/ 3052 slot (indicated in **blue rectangle**) with dual SIM slots (one indicated in **red rectangle**, one situated in the front panel) supporting 5G/ 4G. A copper standoff is provided for you to secure onto the motherboard into the **red arrow** location for an M.2 2242/ 3042 module, or into the **blue arrow** location for an M.2 3052 module.

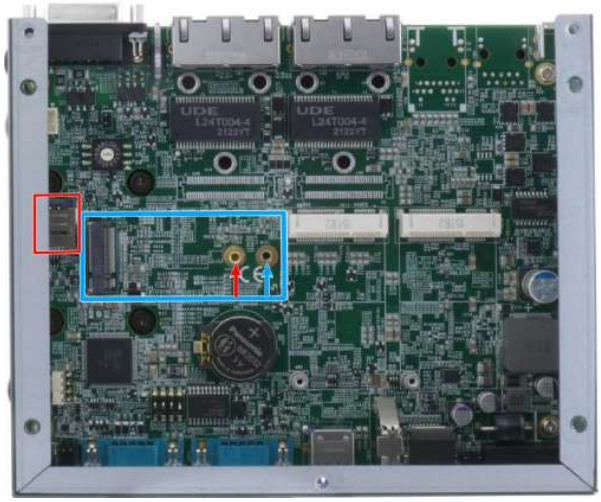

M.2 B key and internal SIM card slot

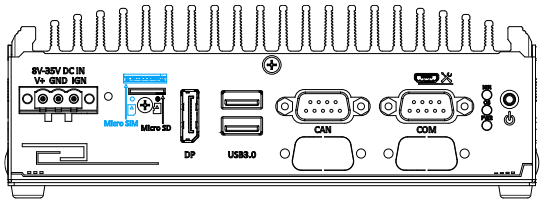

SIM card slot on panel

To install an M.2 2242/ 3042/ 3052 module, please refer to the following procedure:

1. Disassemble the system enclosure.
2. Locate the M.2 B key slot indicated in blue and the SIM card slot indicated in red, or at the front of the panel.
3. Insert the M.2 B key module on a 45 degree angle and secure with a screw. To open the SIM slot, slide the micro SIM cover in the direction shown and flip open the slot.

4. Place the micro SIM card into position, place the cover over the micro SIM card, and slide the cover in the direction shown to lock the SIM card in place.

5. To install the antenna onto the system enclosure, clip on the IPEX-to-SMA cable to the module and secure the antenna to the side panel (refer to the module's manual for clip-on connection).

Clip on the IPEX-to-SMA cable

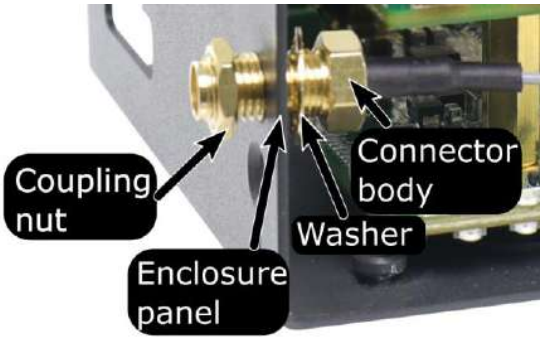

Secure the connector body, coupling nut onto an antenna opening on a panel

6. Remove the protective film on the thermal pad (located on the inside of the bottom panel) corresponding to the M.2 module.

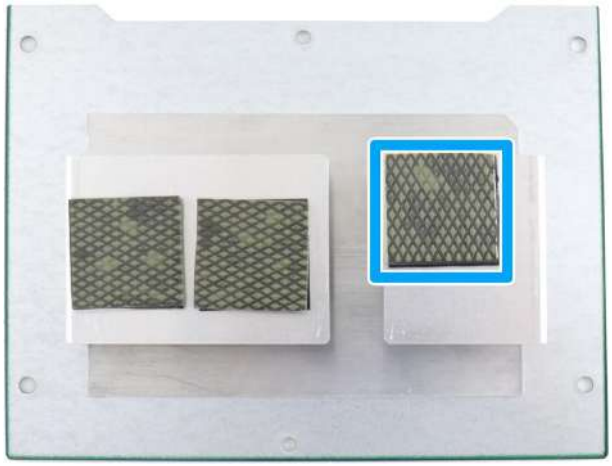

7. Reinstall the system enclosure, panel and external antenna.

If you need to install other components, please refer to respective sections.

3.2.2 mini-PCIe Module Installation

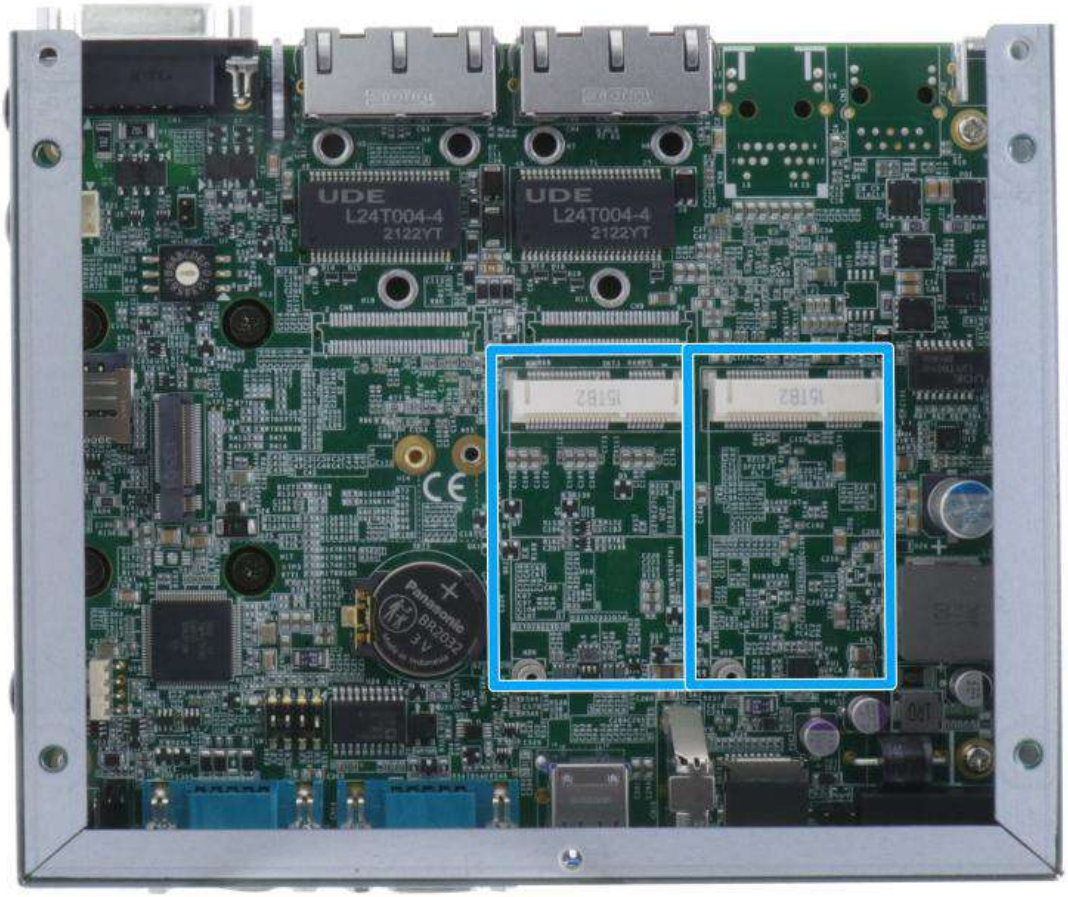

There are two mini-PCIe slots on the main board. Please follow the procedures for installation.

1. Disassemble the system enclosure.

2. To install, insert the gold finger end of the mini-PCIe card on a 45 degree angle into the slot, gently push the other end of the mini-PCIe onto the motherboard and secure it a screw.

45 degree angle insert

Secure the card with a screw

3. To install the antenna onto the system enclosure, clip on the IPEX-to-SMA cable to the module and secure the antenna to the side panel (refer to the module's manual for clip-on connection).

Clip on the IPEX-to-SMA cable

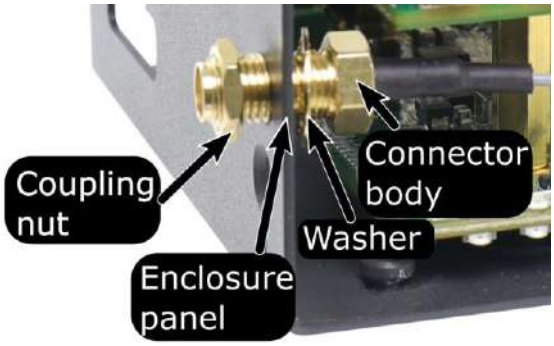

Secure the connector body, coupling nut onto an antenna opening on a panel

4. Remove the protective film on the thermal pad (located on the inside of the bottom panel) corresponding to the mini-PCIe module.

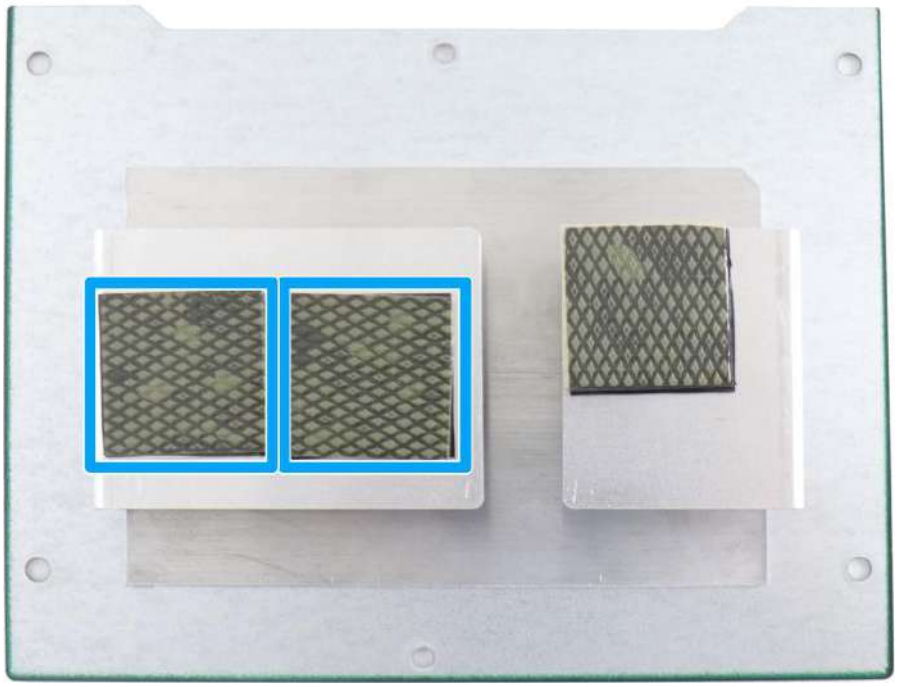

5. Reinstall the enclosure when done.

If you need to install other components, please refer to respective sections.

3.3 Fan Kit Installation

To install a fan kit, please follow the instructions below:

1. Disassemble the system enclosure.

2. From the inside of the enclosure, remove the cover for the fan's 4-pin power connector.

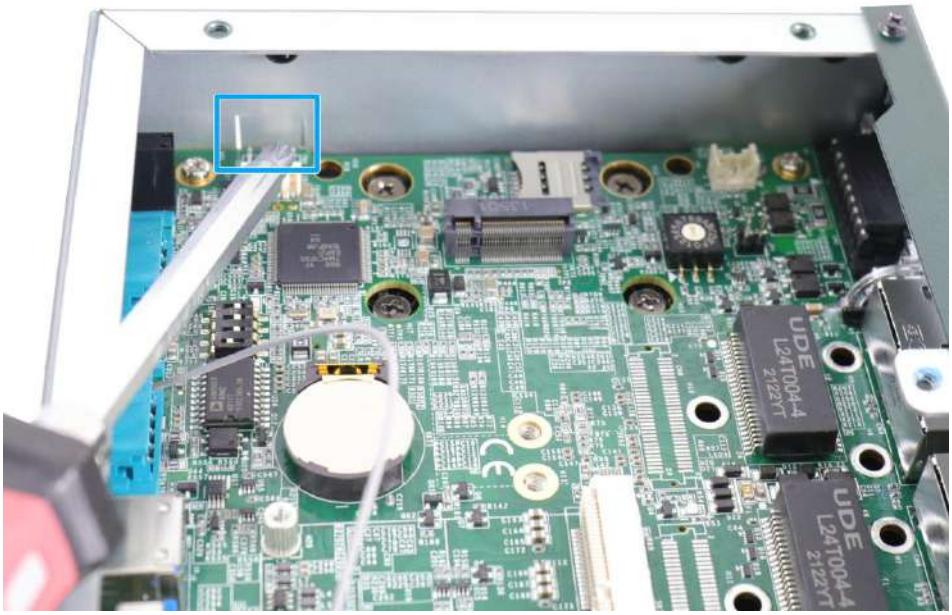

3. Reinstall the enclosure when done.

4. Place the fan kit on top of the enclosure and secure the two hex screws on the 4-pin connector panel and plug in the 4-pin power connector.

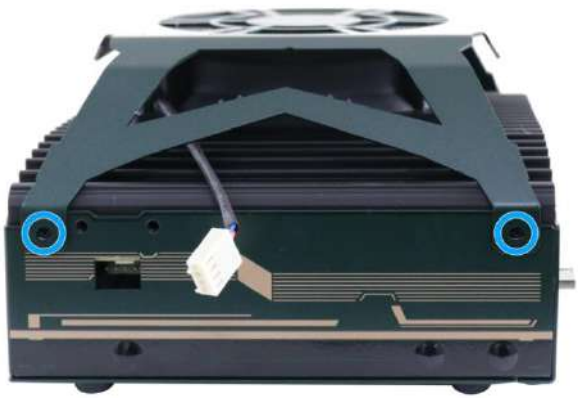

Secure the two screws

Plug in the 4-pin power connector

5. Take out the cable cover (indicated in **red rectangle**) from the accessory box and secure it over the 4-pin power cable using the screws (indicated by the **blue arrows**) provided.

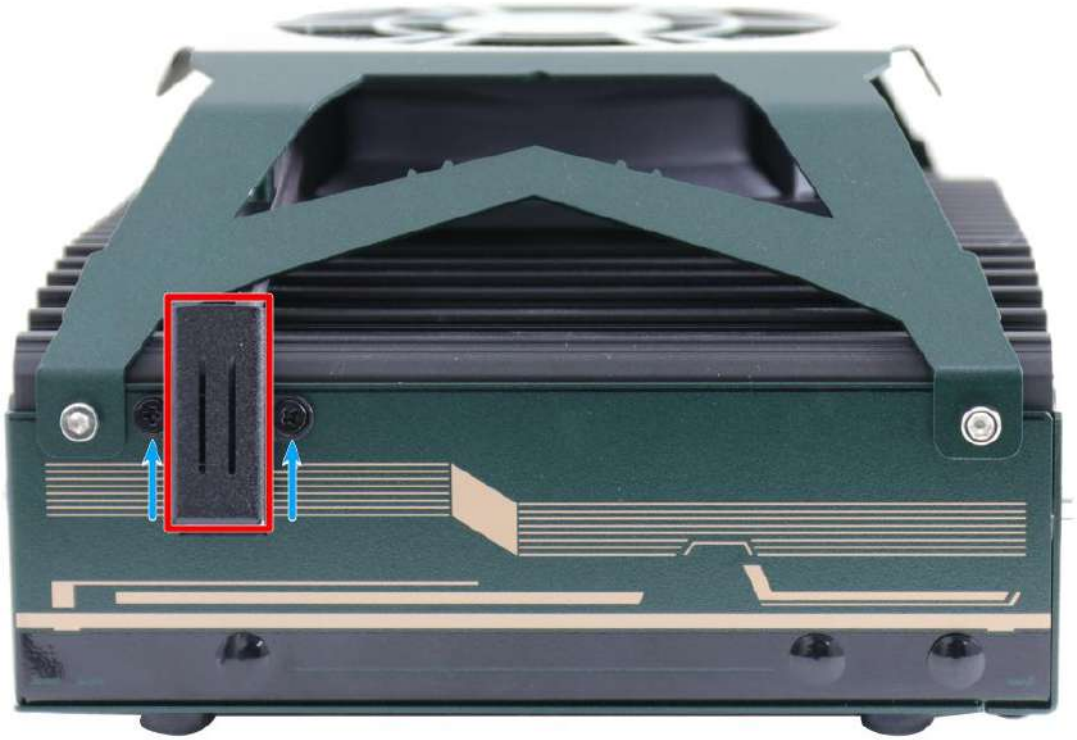

6. Secure the two hex screws on the other side panel to complete the fan kit installation.

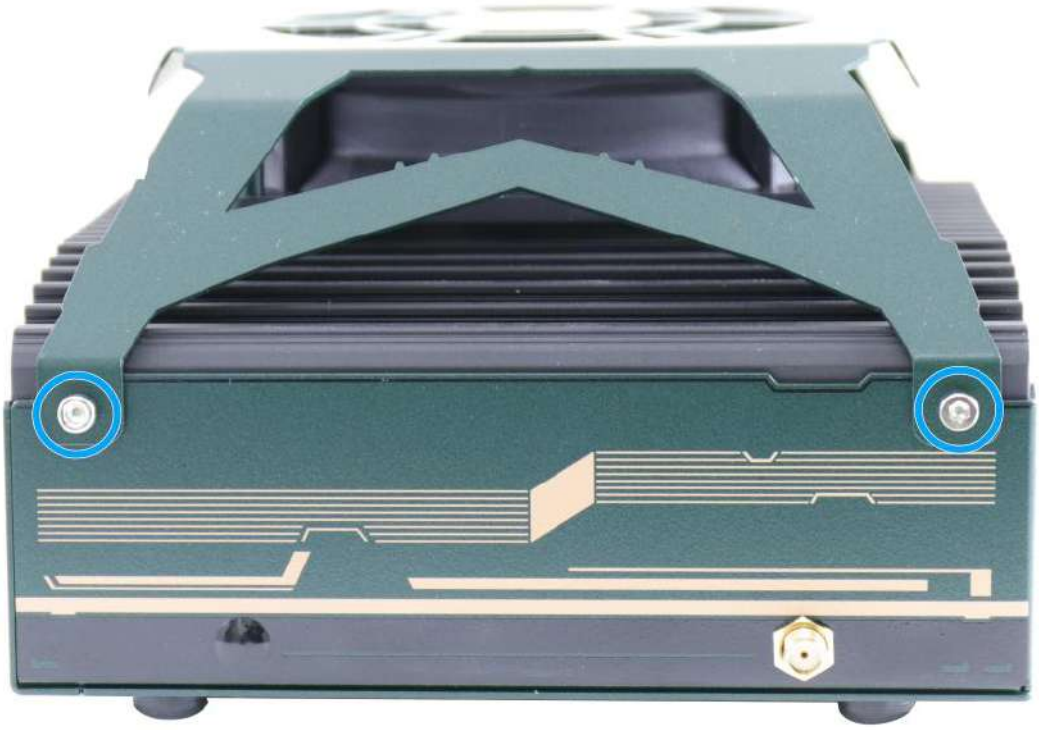

3.4 Installing the System Enclosure

1. To reinstall the system enclosure, turn the system upside-down (the heatsink fins at the bottom), place the bottom panel onto the enclosure and secure the screws indicated in the following illustration.

3.5 Wall Mount Installation

To install the system as a wall mount device, please refer to the following instructions.

1. To install the wall mount kit, please remove the four rubber stands at the bottom of the enclosure.

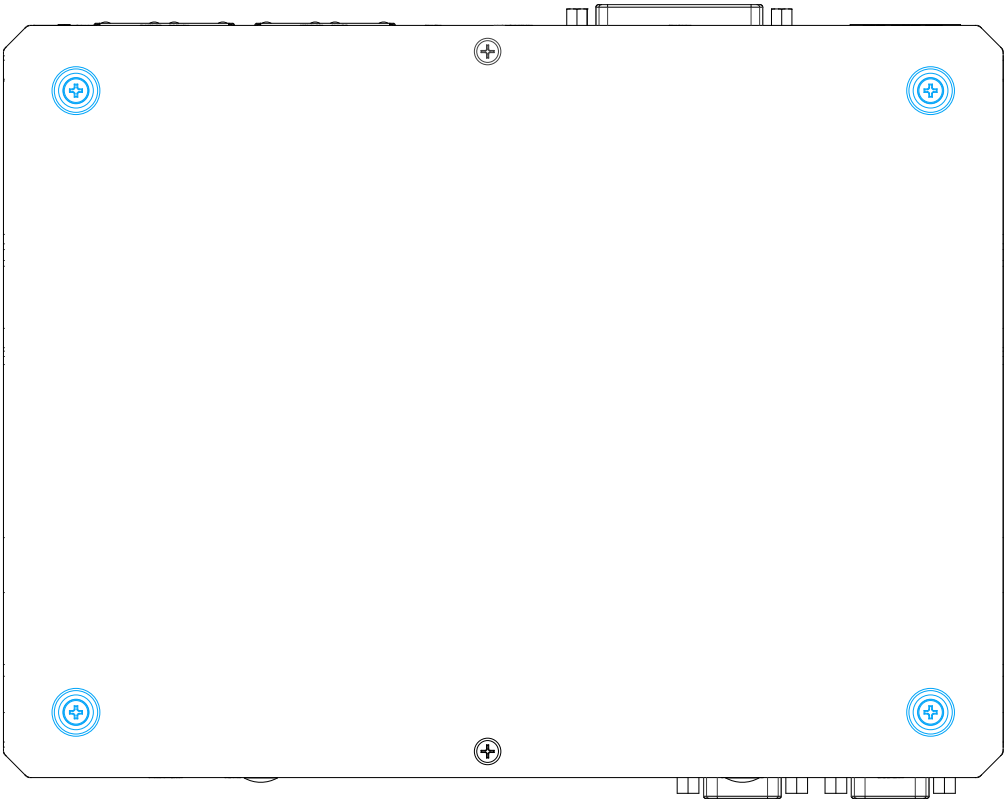

2. Take out the two wall mount brackets (indicated in **blue**) and four M4 screws out of the accessory box. Fix the wall mount brackets to the system enclosure using M4 screws (indicated in **red**).

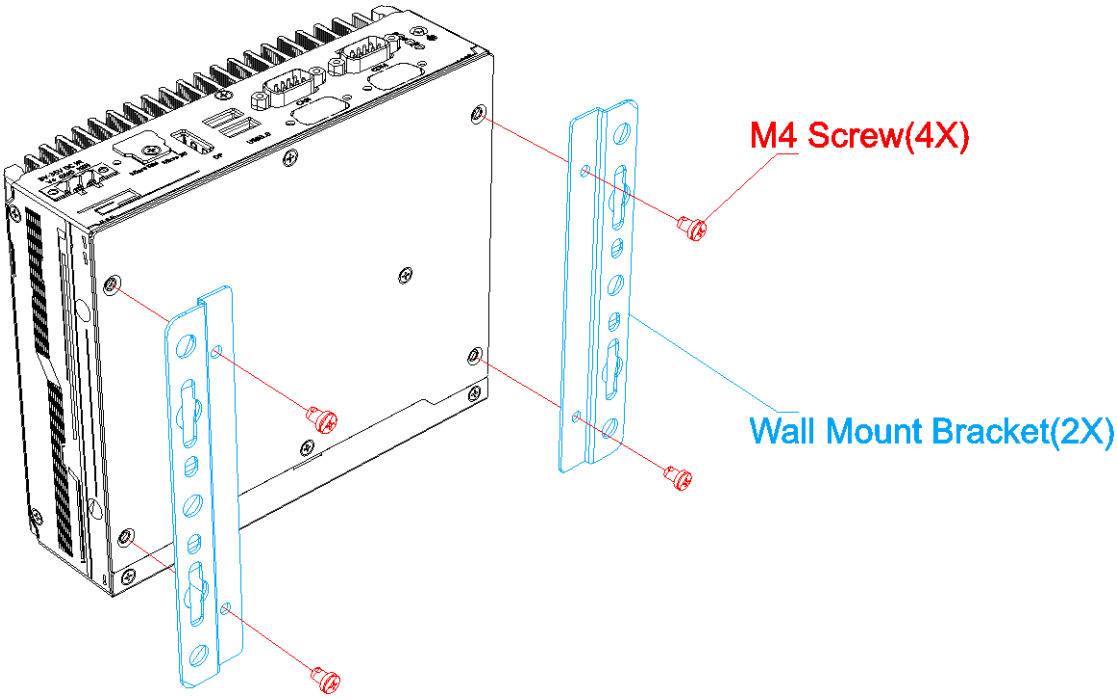

3. Place the system on a flat surface portion of the wall and secure it with four (4) M4 screws.

3.6 Powering On the System

3.6.1 Powering On Using the Power Button

This is the simplest way to turn on your system. The power button on the side panel is a non-latched switch and behaves as the ATX-mode on/off control. With DC power connected, pushing the power button will turn on the system and the PWR LED indicator will light up. Pushing the button when system is on will turn off the system. If your operating system supports ATX power mode, pushing the power button while the system is in operation will result in a pre-defined system behavior, such as shutdown or hibernation.

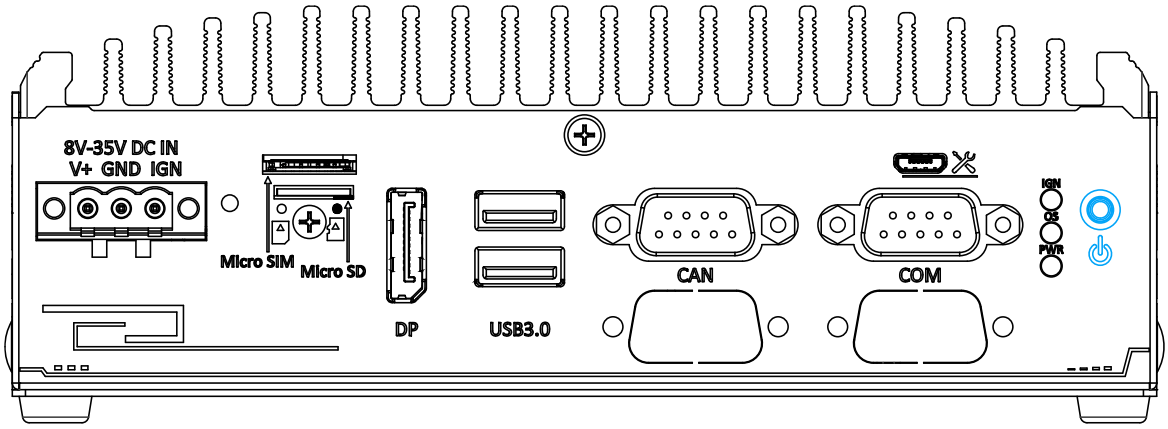

4 Ignition Power Control

The ignition power control module for in-vehicle applications is an MCU-based implementation that monitors the ignition signal and reacts to turn on/off the system according to predefined on/off delay. Its built-in algorithm supports other features such as ultra-low power standby, battery-low protection, system hard-off, etc. In this section, we'll illustrate the principle of ignition power control and operation modes.

4.1 Principles of Ignition Power Control

The concept of ignition power control module is to control the timing correlation between ignition signal and system power status. A typical timing correlation is described in following diagram.

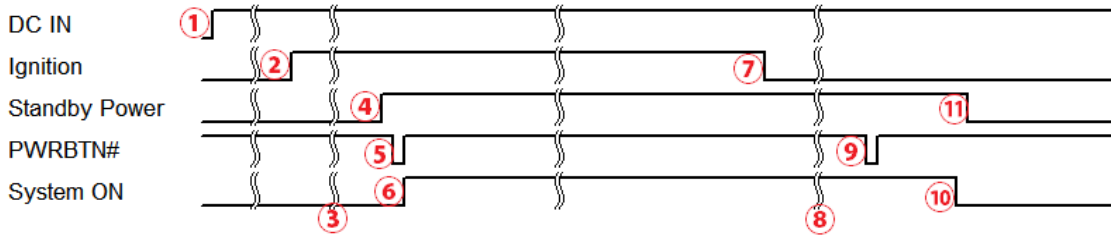

1. When DC power is supplied to the system, MCU starts to periodically detect ignition signal. Note that only MCU is working at this moment and the overall power consumption is less than 2 mW.
2. Ignition signal is active (both 12VDC and 24VDC ignition signals are accepted).
3. MCU starts to count a pre-defined power-on delay.
4. Once power-on delay expired, MCU turns on necessary standby power for the system (3.3VSB & 5VSB).
5. A PWRBTN# pulse is then issued to turn on the system (equivalent to one pressing the power button on the front panel).
6. The system is booting and becomes operational.
7. After a period of time, the ignition signal becomes inactive.
8. MCU starts to count a pre-defined power-off delay.
9. Once power-off delay expired, another PWRBTN# pulse is issued to perform a soft-off for the system (ex. a normal shutdown process for Windows system).
10. The system is completely shut down.
11. As MCU detects system is off, it turns off the standby power for the system, and operates in low power mode again (< 2mW power consumption).

4.1.1 Additional Features of Ignition Power Control

In addition to the typical timing correlation, the ignition power control module offers additional features to provide additional reliability for in-vehicle applications.

- **Low battery detection**

  The ignition power control module continuously monitors the voltage of DC input when the system is operational. If input voltage is less than 11V (for 12VDC input) or less than 22V (for 24VDC input) over a 60-second duration, it will shut down the system automatically.

- **Guarded power-on/ power-off delay duration**

  If ignition signal goes inactive during the power-on delay duration, the ignition power control module will cancel the power-on delay process and go back to idle status. Likewise, if ignition signal goes active during the power-off delay duration, the ignition power control module will cancel the power-off delay process and keep the system running.

- **System hard-off**

  In some cases, system may fail to shutdown via a soft-off operation due to system/ application halts. The ignition power control module offers a mechanism called “hard-off” to handle this unexpected condition. By detecting the system status, it can determine whether the system is shutting down normally. If not, the ignition power control module will force cut-off the system power 10 minutes after the power-off delay duration.

- **Smart off-delay**

  The ignition power control module offers two modes (mode 13 & mode 14) which have very long power-off delay duration for applications require additional off-line time to process after the vehicle has stopped. In these two modes, the ignition power control module will automatically detect the system status during the power-off delay duration. If the system has shutdown (by the application software) prior to power-off delay expiring, it will cut off the system power immediately to prevent further battery consumption.

4.1.2 Wiring Ignition Signal

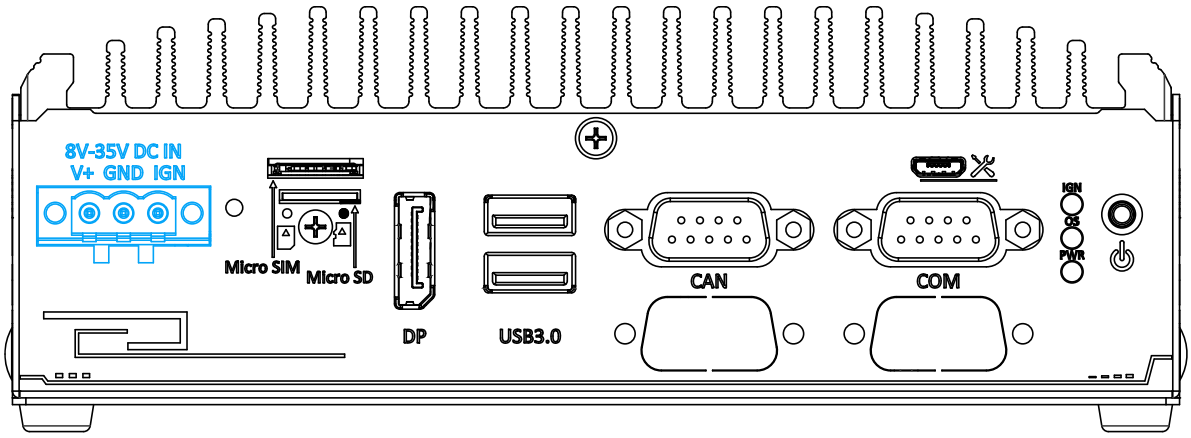

To have ignition power control for in-vehicle usage, you need to supply IGN signal to the system. The IGN input is located on the 3-pin pluggable terminal block (shared with DC power input). For in-vehicle ignition control wiring, please do the following:

1. Connect car Battery + line (12V for sedan, 24V for bus/ truck) to V+.
2. Connect car Battery -/ GND line to GND.
3. Connect ACC line to IGN.

WARNING

Please make sure your DC power source and IGN signal share the same ground.

IGN input accepts 8~35VDC. Supplying a voltage higher than 35VDC may damage the system.

4.1.3 Operation Modes of Ignition Power Control

You can use the rotary switch to configure the operation mode. The system offers 16 (0~15) operation modes with different power-on/power-off delay configurations.

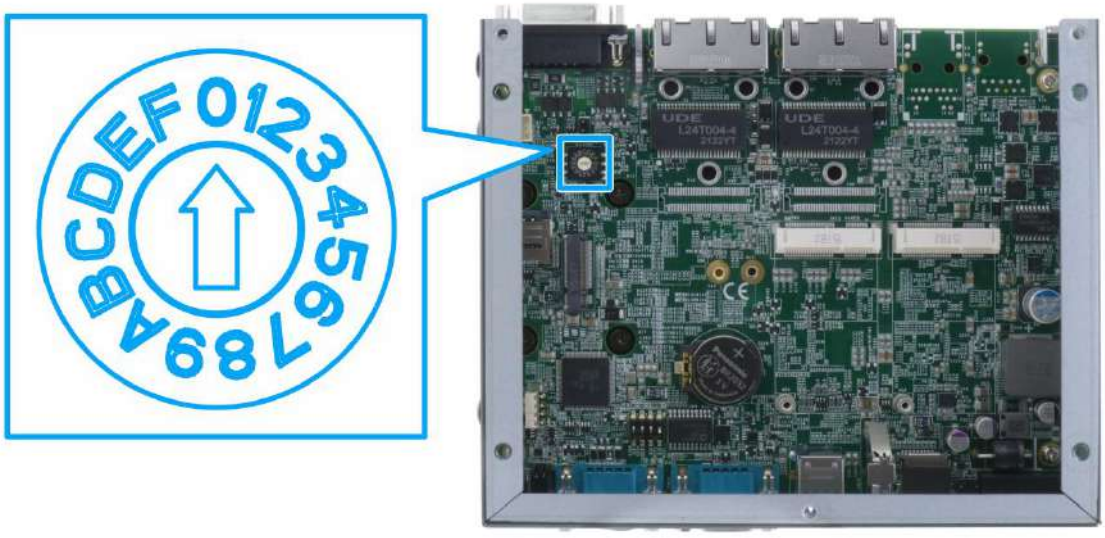

The ignition rotary switch can be located once you remove the bottom panel. Please refer to Disassemble the system enclosure for instructions.

- **Mode 0**

Mode 0 is the ATX mode without power-on and power-off delay. User can only use the power button on the front panel to turn on or turn off the system.

Mode	Power-on Delay	Power-off Delay	Hard-off Timeout
0	N/A	N/A	N/A

- **Mode 1**

Mode 1 is AT mode without power-on and power-off delay. The system automatically turns on when DC power is applied. A retry mechanism is designed to repeat the power-on cycle if the system fails to boot up.

Mode	Power-on Delay	Power-off Delay	Hard-off Timeout
1	N/A	N/A	N/A

- **Mode 2**

Mode 2 is designed to have a very minor power on/ off delay of 160ms for applications that requires the system to start up almost at the same as the rest of the equipment it is working in collaboration with.

Mode	Power-on Delay	Power-off Delay	Hard-off Timeout
2	160ms	160ms	10 minutes

- **Mode 3 ~ Mode 12**

Mode 3 ~ Mode 12 have various power-on delay and power-off delay. Each mode supports a hard-off timeout of 10 minutes.

Mode	Power-on Delay	Power-off Delay	Hard-off Timeout
3	10 seconds	10 seconds	10 minutes
4	10 seconds	1 minute	10 minutes
5	10 seconds	5 minutes	10 minutes
6	30 seconds	1 minute	10 minutes
7	30 seconds	5 minutes	10 minutes
8	30 seconds	10 minutes	10 minutes
9	3 minutes	1 minute	10 minutes
10 (A)	3 minutes	10 minutes	10 minutes
11 (B)	3 minutes	30 minutes	10 minutes
12 (C)	10 minutes	30 minutes	10 minutes

- **Mode 13 (D) / Mode 14 (E)**

Mode 13 and Mode 14 are ignition power control modes with very long power-off delay. Both modes support the feature of “smart off-delay”, which automatically detect system status during power-off delay duration and cut off system power if system is off in prior to power-off delay expired.

Mode	Power-on Delay	Power-off Delay	Hard-off Timeout
13 (D)	30 seconds	2 hours	10 minutes
14 (E)	3 minutes	2 hours	10 minutes

- **Mode 15 (F)**

Mode 15 is reserved.

5 Reflashing the NRU System

To backup and restore pre-built the system, please refer to the following links:

NRU-52S+

https://neousys.gitbook.io/nru-series/nru50/software-related/backup-and-restore-pre-built-nvme

NRU-52S

https://neousys.gitbook.io/nru-series/nru50/software-related/flash/20221026-_-nru-52s-es2-es3

NRU FTP

We put our latest released files on our **FTP**. Please contact your sales representative for the FTP info.

6 Software Reminder

NVIDIA tries to design an OTA mechanism to update the Jetson Xavier Computer from remote. However, as far as we tested, the OTA mechanism might damage the boot loader files and make NRU can't boot anymore.

Please make sure to call "sudo apt-mark hold nvidia-l4t-bootloader" before any software or system update.