Pandora Health NX Super 4xSDI

Compact Edge AI

YUAN
Visualize Intelligent Planet

Features

- Powered by NVIDIA™ Jetson Orin™ NX 16/8GB Super up to 157/117 TOPS
- Compact Size: 123mm×123mm×49.47mm
- 4×SDI Capture
- 3×M.2, 8 Lanes MIPI CSI-2, and I2C / UART / GPIO / CAN Bus
- 2×USB3.2 Gen2, 2×USB2.0, 1×Nano SIM Card Slot
- 1×HDMI2.0

NVIDIA Preferred Partner

Specifications

System		
SOM Module	NVIDIA Jetson Orin™ NX 16GB Super	NVIDIA Jetson Orin™ NX 8GB Super
CPU	8-Core Arm® Cortex®-A78AE v8.2 64-Bit CPU 2MB L2 + 4MB L3	6-Core Arm® Cortex®-A78AE v8.2 64-Bit CPU 1.5MB L2 + 4MB L3
GPU	1024-Core NVIDIA Ampere Architecture GPU with 32 Tensor Cores	1024-Core NVIDIA Ampere Architecture GPU with 32 Tensor Cores
AI Performance	157 TOPS	117 TOPS
System Memory	16GB 128-bit LPDDR5 102.4GB/s	8GB 128-bit LPDDR5 102.4GB/s
Interface		
Storage	Supports External NVMe	
Display Interface	1×HDMI2.0 (Up to 4K60)	
Ethernet	2×RJ45 for 10/100/1000Mbps Ethernet DHCP Client	
Expansion Slot	1×M.2 2280 M Key PCIe Gen4×2 Slot (with Pre-Installed 128GB SSD) 1×M.2 2230 E Key PCIe Gen4×1+USB2.0 Slot, Support WiFi Module. 1×M.2 3042/3052 B Key USB3.2 Gen1 Slot, Support 5G/4G Wireless Module	
USB	2×USB3.2 Gen2 (Type-A) 1×USB3.2 Gen2 (Type-C) (OTG) 2×USB2.0 (Type-A)	
MIPI	8-Lane MIPI CSI-2 (D-PHY 2.1, Support MIPI Camera, Capture Card)	
Audio	1×Line In (3.5mm Phone Jack) 1×Line Out (3.5mm Phone Jack)	
Peripheral Communication	40 Pin Header 1×I2S 2×I2C 2×SPI 1×UART 3×GPIO 14 Pin Header 1×CAN Bus 1×UART with CTS/RTS 1×UART for Debug 1×Nano SIM Card Slot	
Misc. Features	Firmware Upgradable TPM Module (Optional)	

Key Points

Video Feature	
Input	4×SDI

COPYRIGHT©YUAN High-Tech Development Co., Ltd.

Video Encode / Decode

Video Feature	
Video Encode	NVIDIA Jetson Orin™ NX Super: AV1 (UHP) 1×4K60 | 3×4K30 | 6×1080p60 | 12×1080p30 H.265 (UHP) 1×4K60 | 3×4K30 | 6×1080p60 | 12×1080p30 H.264 (UHP) 1×4K60 | 2×4K30 | 5×1080p60 | 11×1080p30
Video Decode	NVIDIA Jetson Orin™ NX Super: AV1 (Main Profile) 1×8K30 | 2×4K60 | 4×4K30 | 10×1080p60 | 20×1080p30 H.265 (Main, Main10) 1×8K30 | 2×4K60 | 4×4K30 | 9×1080p60 | 18×1080p30 H.264 (Baseline, Main, High) 1×4K60 | 2×4K30 | 5×1080p60 | 11×1080p30 VP9 (Profile 0, Profile 2) 1×4K60 | 3×4K30 | 7×1080p60 | 15×1080p30

Environment

Development Environment	
JetPack	6.2 or Higher
Environment	
Power Supply	DC input : 12~36V
Power Consumption	Max: 56.2W
Operating Temperature	Standard Version: 0~60 ˚C with Airflow
Storage Temperature	-20~80 ˚C

Mechanical

- Dimension of case: 123mm×123mm×49.47mm
- Weight: 470g

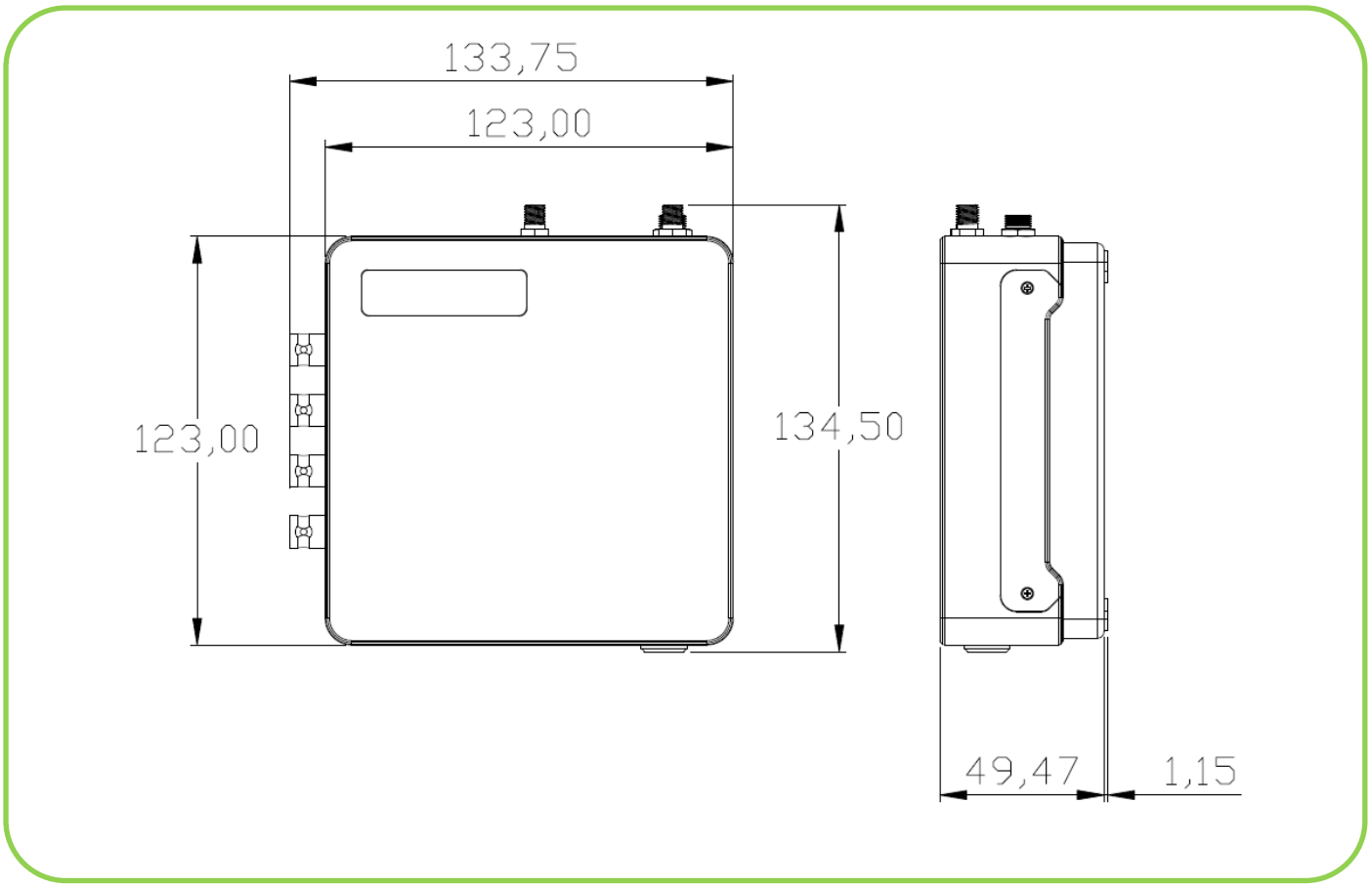

COPYRIGHT©YUAN High-Tech Development Co., Ltd.

I/O Layout

- Carrier Board

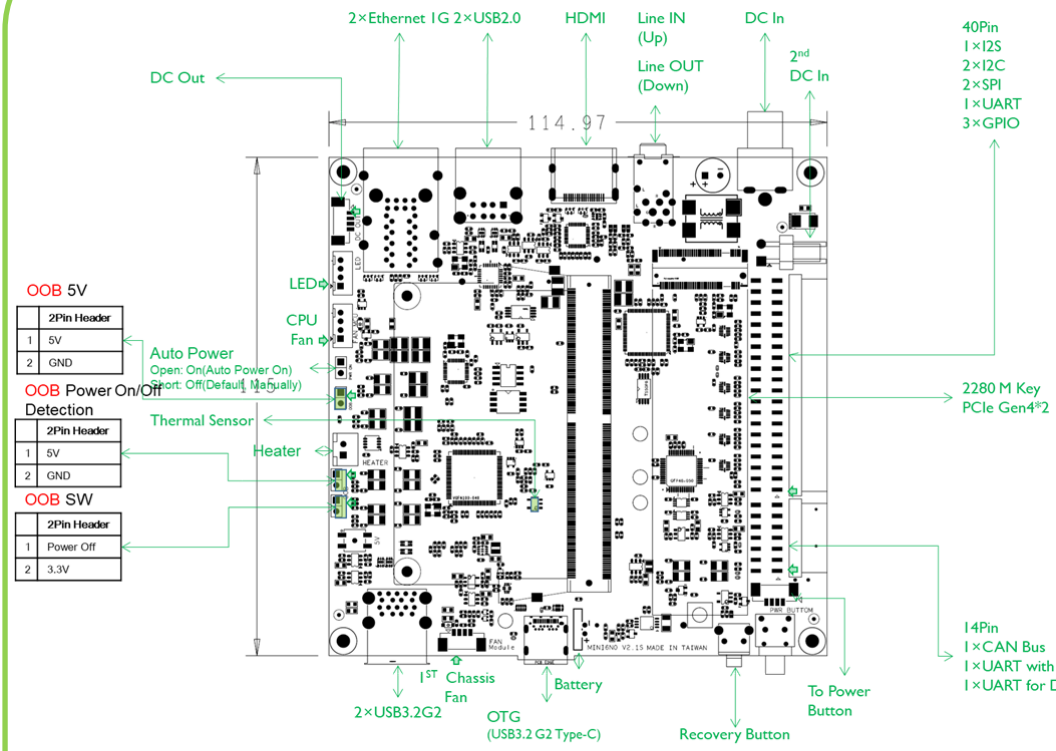

OOB 5V

	2Pin Header
1	5V
2	GND

OOB Power On/Off Detection

	2Pin Header
1	5V
2	GND

OOB SW

	2Pin Header
1	Power Off
2	3.3V

Pin	Define	Pin	Define
1	3.3V	2	5.0V
3	I2C1 DATA	4	5.0V
5	I2C1 Clock	6	GND
7	GPIO9	8	UART1 TX
9	GND	10	UART1 RX
11	UART1 RTS	12	I2S0 SCLK
13	SPI1 SCK	14	GND
15	GPIO12	16	SPI1 CS1
17	3.3V	18	SPI1 CS0
19	SPI0 MOSI	20	GND
21	SPI0 MISO	22	SPI1 MISO
23	SPI0 SCK	24	SPI0 CS0
25	GND	26	SPI0 CS1
27	I2C0 SDA	28	I2C0 SCL
29	GPIO1	30	GND
31	GPIO11	32	GPIO7
33	GPIO13	34	GND
35	I2S0 FS	36	UART1 CTS
37	SPI1 MOSI	38	I2S0 DIN
39	GND	40	I2S0 DOUT

Pin	Define	Pin	Define
1		2	CAN Tx
3	RTS	4	CAN Rx
5	UART0 Rx	6	GND
7	UART0 Tx	8	3.3V
9	Vcc (3.3V)	10	UART Rx (3.3V)
11	CTS	12	GND
13	GND	14	UART Tx (3.3V)

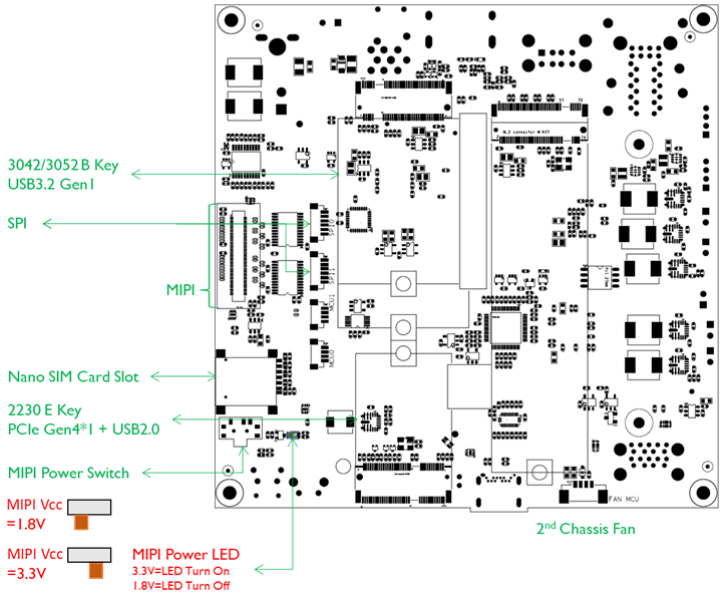

All registered trademarks are the property of their owners. The photo is for reference only.
* Technology License Patent Royalty. Supplier (YUAN Technology Ltd.) as an OEM vendor is not responsible for any royalties applied to the Models and collected by any patent or trade mark holders or his e×clusive, non-e×clusive.

Licensees or representatives such as MPEGLA, Dolby, Thomson, Sisvel, H.264, MPEG4 and any other natural or legal person. All concerning royalties of patents and trade marks will be paid or negotiated with the above mentioned owner by you. In case of any patent or trademark infringement you are responsible for all necessary processes and costs. You accept and acknowledge that all prices of Models offered by supplier are exclusive of any royalties, charges or license fees for any patents in any countries or areas.