# RAC-1000/1100 USER Manual

NVIDIA® Jetson AGX Orin™ Rugged AI Computing System
6 GigE LAN with 4 PoE+, 8 GMSL2, 1 PCIe x8, -25°C to 70°C Operation

Vecow

1.1.0 Edition 20250617

# Record of Revision

| Version | Date | Page | Description | Remark |
|---|---|---|---|---|
| 1.00 | 2024/10/22 | All | Official Release | |
| 1.10 | 2025/06/17 | 8 | Update | |

# Disclaimer

This manual is released by Vecow Co., Ltd. for reference purpose only. All product offerings and specifications are subject to change without prior notice. It does not represent commitment of Vecow Co., Ltd. Vecow shall not be liable for direct, indirect, special, incidental, or consequential damages arising out of the use of the product or documentation or any infringements upon the rights of third parties, which may result from such use.

# Declaration of Conformity

**FCC**

This equipment has been tested and found to comply with the limits for a Class A digital device, pursuant to part 15 of the FCC Rules. These limits are designed to provide reasonable protection against harmful interference when the equipment is operated in a commercial environment. This equipment generates, uses, and can radiate radio frequency energy, and if it is not installed and used in accordance with the instruction manual, it may cause harmful interference to radio communications. Operation of this equipment in a residential area is likely to cause harmful interference in which case the user will be required to correct the interference at his own expense.

**CE**

The products described in this manual complies with all applicable European Union (CE) directives if it has a CE marking. For computer systems to remain CE compliant, only CE-compliant parts may be used. Maintaining CE compliance also requires proper cable and cabling techniques.

# Copyright and Trademarks

This document contains proprietary information protected by copyright. No part of this publication may be reproduced in any form or by any means, electric, photocopying, recording or otherwise, without prior written authorization by Vecow Co., Ltd. The rights of all the brand names, product names, and trademarks belong to their respective owners.

# Order Information

| Part Number | Description |
|---|---|
| RAC-1000-R64 | RAC-1000, on-board 64GB RAM, 2 LAN, 2 USB 3.1, 2 COM RS-232/422/485, 2 Isolated CAN Bus, 8 Fakra-Z connectors for GMSL 1/2 automotive cameras |
| RAC-1000-R32 | RAC-1000, on-board 32GB RAM, 2 LAN, 2 USB 3.1, 2 COM RS-232/422/485, 2 Isolated CAN Bus, 8 Fakra-Z connectors for GMSL 1/2 automotive cameras |
| RAC-1100-R64 | RAC-1100, on-board 64GB RAM, 6 LAN with 4 PoE+, 2 USB 3.1, 2 COM RS-232/422/485, 2 Isolated CAN Bus |
| RAC-1100-R32 | RAC-1100, on-board 32GB RAM, 6 LAN with 4 PoE+, 2 USB 3.1, 2 COM RS-232/422/485, 2 Isolated CAN Bus |

# Optional Accessories

| Part Number | Description |
|---|---|
| PWA-160WB-WT | 160W, 24V, 85V AC to 264V AC Power Adapter with 3-pin Terminal Block, Wide Temperature -30°C to +70°C |
| PWA-180WB | 180W, 24V, 90V AC to 264V AC Power Adapter with 3-pin Terminal Block |
| PWA-280WB-WT | 280W, 24V, 85V AC to 264V AC Power Adapter with 3-pin Terminal Block, Wide Temperature -30°C to +70°C |
| GMSL Camera Kit | GMSL Camera with Fakra-Z connector |
| M.2 Storage Module | M.2 Key M/Key B PCIe Storage Module |
| 5G Module | 5G Module with Antenna |
| 4G Module | 4G/GPS Module with Antenna |
| WiFi & Bluetooth | WiFi & Bluetooth Module with Antenna |

# Table of Contents


## CHAPTER 1 GENERAL INTRODUCTION 1

1.1 Overview 1
1.2 Features 2
1.3 Product Specification 3
1.3.1 Specifications of RAC-1000 3
1.3.2 Specifications of RAC-1100 5
1.4 Mechanical Dimension 7
1.4.1 Dimensions of RAC-1000 7
1.4.2 Dimensions of RAC-1100 7

## CHAPTER 2 GETTING TO KNOW YOUR RAC-1000/1100 8

2.1 RAC-1000/1100 Packing List 8
2.2 Front Panel I/O & Functions 9
2.3 Rear Panel I/O & Functions 12

## CHAPTER 3 SYSTEM SETUP 16

3.1 How to Open Your RAC-1000 16
3.2 Mounting Your RAC-1000/RAC-1100 19

## CHAPTER 4 SOFTWARE SETUP 20

4.1 Peripheral Interface Guide 20
4.2 Flash image to Your RAC-1000/RAC-1100 20

APPENDIX A : GMSL Camera Guide (RAC-1000 Only) 23
APPENDIX B : Power Consumption 24
APPENDIX C : Supported Expansion Module List 26

# 1

# GENERAL INTRODUCTION

## 1.1 Overview

The Vecow RAC-1000/1100 is an Arm-based rugged AI computing system powered by the NVIDIA® Jetson AGX Orin™ system-on-module. With up to 275 TOPS of AI performance, this system excels in demanding industrial and outdoor applications, including automated agricultural machinery, outdoor mobile robots, and construction automation.

Designed for harsh environments, the RAC-1000/1100 features an IP67-rated, anti-dust and waterproof chassis. It includes eight GMSL 1/2 automotive cameras connected via rugged FAKRA-Z connectors, ensuring reliable operation in extreme conditions. The system features extensive I/O options with rugged M12 connectors, including USB, COM, GigE LAN, HDMI, and CAN Bus, along with a PCIe Gen3 x8 expansion slot, providing seamless integration and customization capabilities.

The RAC-1000/1100 supports operating temperatures from -25°C to 70°C and a wide DC input range of 9V to 50V, making it versatile for various power configurations. Its compatibility with GMSL1/GMSL2 automotive cameras via MAXIM MAX9296 and FAKRA-Z connectors further enhances its adaptability. Meeting stringent industrial-grade requirements, the Vecow RAC-1000/1100 is a reliable, high-performance AI computing solution for edge AI applications.

## 1.2 Features

- Advanced NVIDIA® Jetson AGX Orin™ platform delivers up to 275 TOPS AI performance
- The latest NVIDIA Ampere™ architecture, featuring with 2048 NVIDIA® CUDA® cores and 64 Tensor cores
- Supports 8 GMSL 1/2 automotive cameras with Fakra-Z connectors
- IP67 Anti-dust and Waterproof Chassis design
- 1 PCIe Gen3 x8 expansion slot supports optional multiple 10GigE/PoE LAN/USB connections (by request)
- 2 Isolated CAN-FD, 2 COM RS-232/422/485
- 6 GigE LAN with 4 PoE+, 2 USB 3.1, 1 Digital Display supports 4K60
- DC 9V to 50V wide range power input

## 1.3 Product Specification

### 1.3.1 Specifications of RAC-1000

| | |
|---|---|
| **System** | |
| Processor | NVIDIA® Jetson AGX Orin™ System-On-Module<br>• 12-core Arm® Cortex®-A78AE v8.2 64-bit CPU<br>• 2048-core NVIDIA Ampere™ architecture GPU with 64 Tensor Cores |
| Memory | • R32 : 1 32GB LPDDR5 DRAM<br>• R64 : 1 64GB LPDDR5 DRAM<br>• IND : 1 64GB LPDDR5 DRAM |
| Storage | eMMC 5.1, 64 GB |
| Software Support | • Linux<br>• NVIDIA JetPack SDK |
| **Graphics** | |
| Interface | 1 Digital Display, up to 4K60 |
| Video Encode | • R32 : 1x 4K @60, 3x 4K @30, 6x 1080p @60, 12x 1080p @30 (HEVC)<br>• R64 : 2x 4K @60, 4x 4K @30, 8x 1080p @60, 16x 1080p @30 (HEVC) |
| Video Decode | • R32 : 1x 8K @30, 2x 4K @60, 4x 4K @30, 9x 1080p @60, 18x 1080p @30 (HEVC)<br>• R64 : 1x 8K @30, 3x 4K @60, 7x 4K @30, 11x 1080p @60, 22x 1080p @30 (HEVC) |
| **Ethernet** | |
| LAN 1 to LAN 2 | 10/100/1000Base-T Ethernet GigE LAN, X-coded M12 Connector |
| **Camera** | |
| GMSL | 8 Fakra-Z connectors for GMSL 1/2 automotive cameras |
| **I/O Interface** | |
| USB | 2 USB 3.1 (M12) |
| Serial | 2 COM RS-232/422/485 (M12 A-coded) |
| LAN | 2 GigE LAN (M12 X-coded) |
| HDMI | 1 HDMI 2.1 (M12) |
| CAN Bus | 2 Isolated CAN Bus support CAN FD (M12 A-coded) |
| Flash | 1 Micro USB OS flash port |
| Button | • 1 Power Button with LED<br>• 1 Recovery button |
| **Expansion** | |
| PCIe | 1 PCIe x8 Slot (by request) |
| M.2 | • 1 M.2 Key B Socket (3042/3052)<br>• 1 M.2 Key E Socket (2230) |

| | |
|---|---|
| **Storage** | |
| M.2 | 2 M.2 Key M Socket (2280) |
| eMMC | 1 eMMC 5.1, 64GB |
| **Power** | |
| Power Input | DC 9V to 50V |
| Power Interface | 4-pin K-Code M12 connector |
| **Mechanical** | |
| Dimensions | 260 mm x 330 mm x 80 mm (10.23” x 13” x 3.14”) |
| Weight | 7 kg (15.43 lb) |
| Mounting | Wallmount |
| **Environment** | |
| Operating Temperature | 30W TDP Mode :<br>-25°C to 70°C (-13°F to 158°F), with 0.63 m/s air flow<br>50W TDP Mode :<br>-25°C to 55°C (-13°F to 131°F), with 0.63 m/s air flow |
| Storage Temperature | -40°C to 85°C (-40°F to 185°F) |
| Humidity | 5% to 95% Humidity, non-condensing |
| Relative Humidity | 95% at 70°C |
| Shock | Operating, MIL-STD-810G, Method 516.7, Procedure I |
| Vibration | Operating, MIL-STD-810G, Method 514.6, Procedure I, Category 4 |
| EMC | CE, FCC, EN50155, EN50121-3-2, IP67 |

### 1.3.2 Specifications of RAC-1100

| System | |
|---|---|
| Processor | NVIDIA® Jetson AGX Orin™ System-On-Module<br>• 12-core Arm® Cortex®-A78AE v8.2 64-bit CPU<br>• 2048-core NVIDIA Ampere™ architecture GPU with 64 Tensor Cores |
| Memory | • R32 : 1 32GB LPDDR5 DRAM<br>• R64 : 1 64GB LPDDR5 DRAM<br>• IND : 1 64GB LPDDR5 DRAM |
| Storage | eMMC 5.1, 64 GB |
| Software Support | • Linux<br>• NVIDIA JetPack SDK |
| **Graphics** | |
| Interface | 1 Digital Display, up to 4K60 |
| Video Encode | • R32 : 1x 4K @60, 3x 4K @30, 6x 1080p @60, 12x 1080p @30 (HEVC)<br>• R64 : 2x 4K @60, 4x 4K @30, 8x 1080p @60, 16x 1080p @30 (HEVC) |
| Video Decode | • R32 : 1x 8K @30, 2x 4K @60, 4x 4K @30, 9x 1080p @60, 18x 1080p @30 (HEVC)<br>• R64 : 1x 8K @30, 3x 4K @60, 7x 4K @30, 11x 1080p @60, 22x 1080p @30 (HEVC) |
| **Ethernet** | |
| LAN 1 to LAN 2 | 10/100/1000Base-T Ethernet GigE LAN, X-coded M12 Connector |
| **PoE+** | |
| LAN 3 to LAN 6 | IEEE 802.3at (25.5W/48V) GigE PoE+ LAN, X-coded M12 Connector |
| **I/O Interface** | |
| USB | 2 USB 3.1 (M12) |
| Serial | 2 COM RS-232/422/485 (M12 A-coded) |
| LAN | 2 GigE LAN (M12 X-coded) |
| HDMI | 1 HDMI 2.1 (M12) |
| CAN Bus | 2 Isolated CAN Bus support CAN FD (M12 A-coded) |
| Flash | 1 Micro USB OS flash port |
| Button | • 1 Power Button with LED<br>• 1 Recovery button |
| **Expansion** | |
| PCIe | 1 PCIe x8 Slot (by request) |
| M.2 | • 1 M.2 Key B Socket (3042/3052)<br>• 1 M.2 Key E Socket (2230) |

| | |
|---|---|
| **Storage** | |
| M.2 | 2 M.2 Key M Socket (2280) |
| eMMC | 1 eMMC 5.1, 64GB |
| **Power** | |
| Power Input | DC 9V to 50V |
| Power Interface | 4-pin K-Code M12 connector |
| **Mechanical** | |
| Dimensions | 260 mm x 330 mm x 80 mm (10.23” x 13” x 3.14”) |
| Weight | 7 kg (15.43 lb) |
| Mounting | Wallmount |
| **Environment** | |
| Operating Temperature | 30W TDP Mode :<br>-25°C to 70°C (-13°F to 158°F), with 0.63 m/s air flow<br>50W TDP Mode :<br>-25°C to 55°C (-13°F to 131°F), with 0.63 m/s air flow |
| Storage Temperature | -40°C to 85°C (-40°F to 185°F) |
| Humidity | 5% to 95% Humidity, non-condensing |
| Relative Humidity | 95% at 70°C |
| Shock | Operating, MIL-STD-810G, Method 516.7, Procedure I |
| Vibration | Operating, MIL-STD-810G, Method 514.6, Procedure I, Category 4 |
| EMC | CE, FCC, EN50155, EN50121-3-2, IP67 |

# 1.4 Mechanical Dimension

## 1.4.1 Dimensions of RAC-1000

Unit : mm (inch)

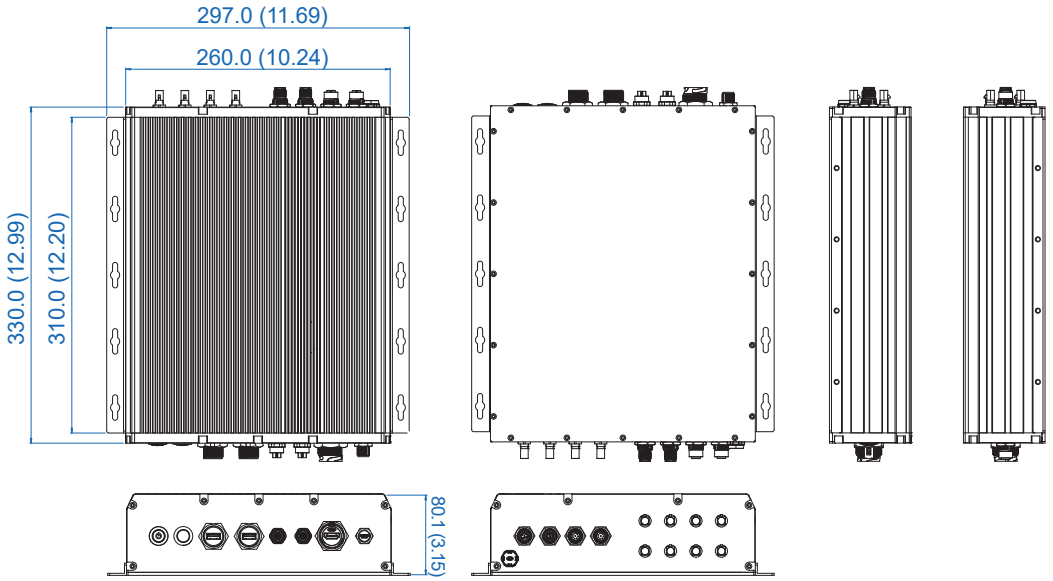


## 1.4.2 Dimensions of RAC-1100

Unit : mm (inch)

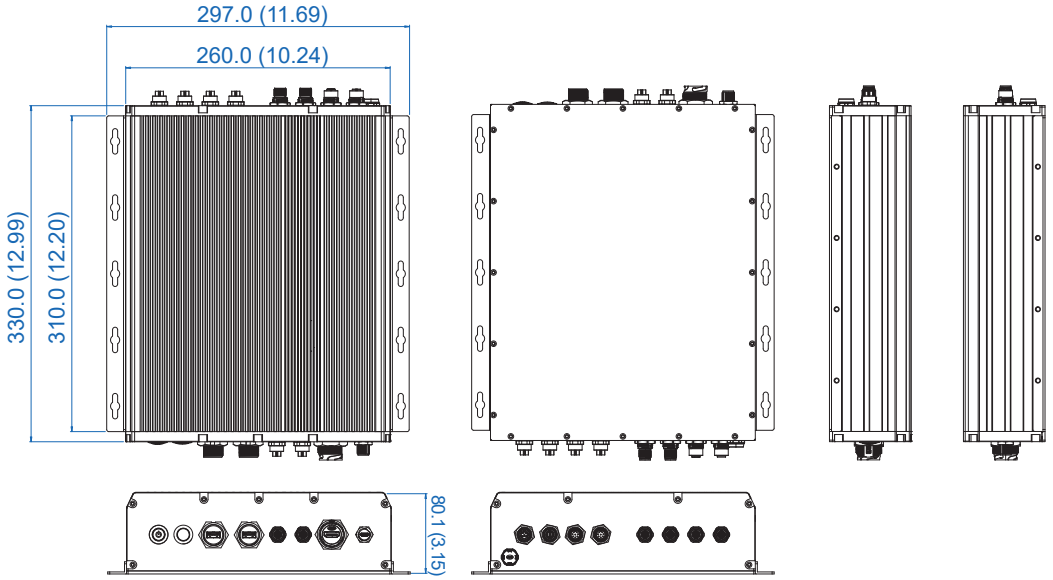

# 2

# GETTING TO KNOW YOUR RAC-1000/1100

## 2.1 RAC-1000/1100 Packing List

| Item | Description | Qty |
|---|---|---|
| 1 | RAC-1000/RAC-1100 Edge AI Computing System<br>(According to the configuration of your order, RAC-1000/RAC-1100 series may contain micro SD and M.2 modules. Please verify these items if necessary.) | 1 |

| Item | Description | Outlook | Usage | P/N | Qty |
|---|---|---|---|---|---|
| 1 | PHILLIPS#10-32x6L,Ni | | Wall Mount | 53-I000510-000 | 8 |
| 2 | Wall Mount Bracket RAC-1000 | | Mount | 62-04P1636-30A | 2 |
| 3 | M12 DC Cable | | DC | 61-1CB2000-104 | 1 |

## 2.2 Front Panel I/O & Functions

### 2.2.1 Functions of RAC-1000/1100 series

In Vecow RAC-1000/1100 series, Most of the I/O connectors are located on the front panels. Most of the general connections to computer devices, such as Power Button, Force Recovery button, USB, LAN, Digital Display Port, Flash Port are placed on the front panel.

### 2.2.2 Power Button

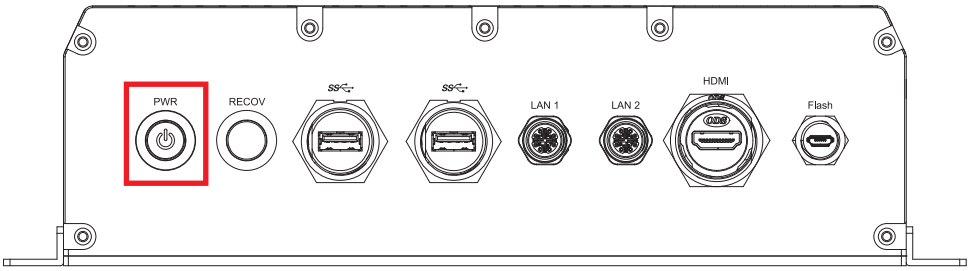


The Power Button is a non-latched switch with LED indication.

To power on the system, press the power button and then the blue LED is lightened. To power off the system, you can either command shutdown by OS operation, or just simply press the power button.

### 2.2.3 Force Recovery Button

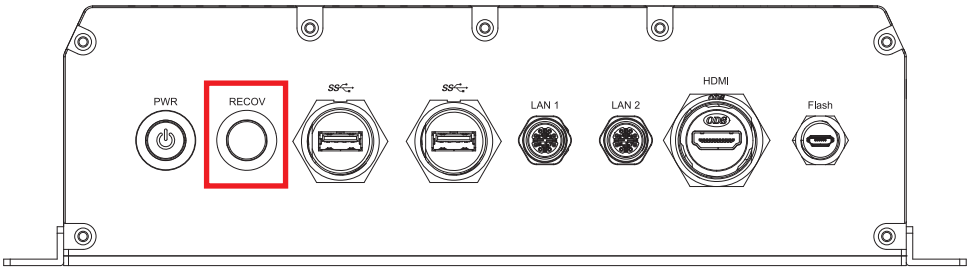


Used to enter Force Recovery Mode. Button is held down while either system is first powered on, or by pressing & releasing reset button while Recovery button is pressed.

### 2.2.4 USB 3.2 Gen1

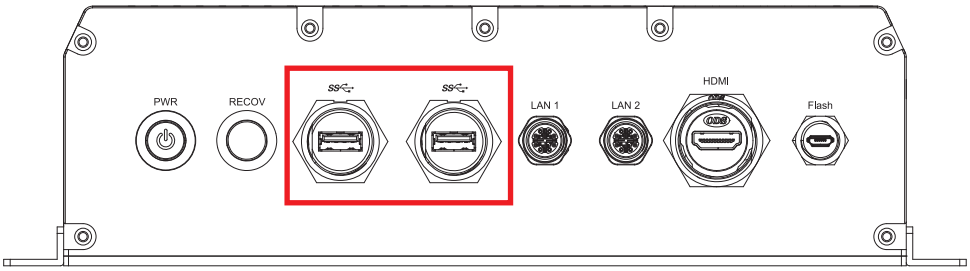


There are 2 USB 3.2 Gen1 connections available supporting up to 5Gb per second data rate in the front panel of RAC-1000/1100 series. It is also compliant with the requirements of Speed (SS), High Speed (HS), Full Speed (FS) and Low Speed (LS).

### 2.2.5 Ethernet Port

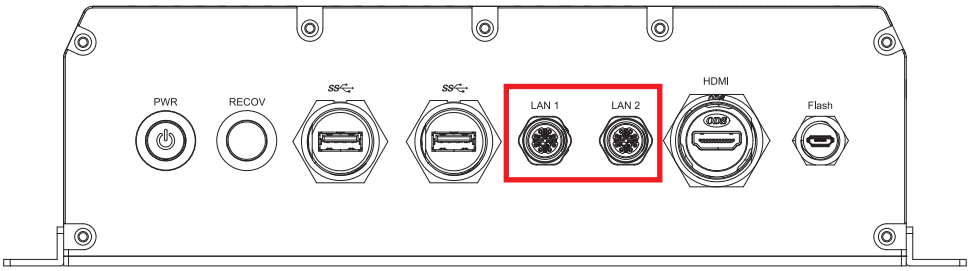


There are two LAN ports supporting 10/100/1000 Mbps Ethernet connections on the front side of RAC-1000/1100 series.

| LAN Chip | Function | Connector |
|---|---|---|
| RTL8211_LAN1 | RJ-45(10/100/1000) | LAN1 |
| I210_LAN2 | RJ-45(10/100/1000) | LAN2 |

The pin define of LAN 1 & LAN 2 are listed as follows:

| Pin Define | Pin No. | 100MBps | 1000MBps |
|---|---|---|---|
| 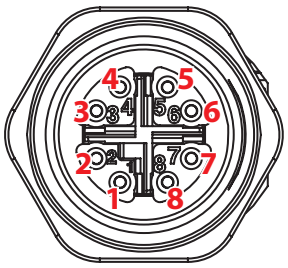 | 1 | TX- | MDI0_N |
| | 2 | TX+ | MDI0_P |
| | 3 | RX- | MDI1_N |
| | 4 | RX+ | MDI1_P |
| | 5 | ----- | MDI2_N |
| | 6 | ----- | MDI2_P |
| | 7 | ----- | MDI3_N |
| | 8 | ----- | MDI3_P |

### 2.2.6 Digital Display Port

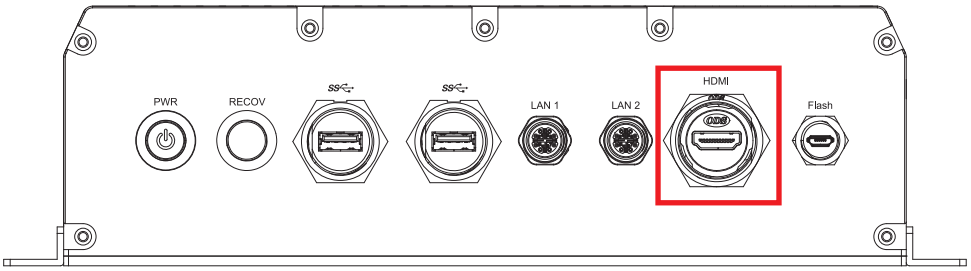


Onboard HDMI Ports support HDMI V2.1 interface, connection supports up to Up to 3840 x 2160 @60Hz.

### 2.2.7 Flash Port

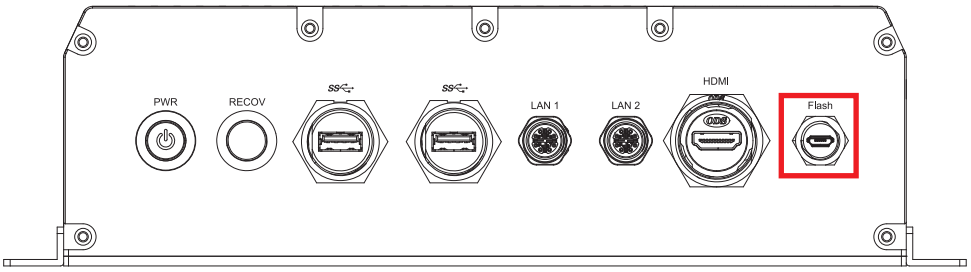


The RAC-1000/1100 USB Recovery mode provides an alternate boot device (USB). In this mode, the system is connected to a host system and boots over USB. This is used when a new image needs to be flashed. USB0 must be available to use as USB Device for USB Recovery Mode.

## 2.3 Rear Panel I/O & Functions

### 2.3.1 Functions of RAC-1000 series

In Vecow RAC-1000 series, Some of the I/O connectors are located on the rear panels. Such as Power input, CAN Port, COM Port, GMSL Camera are placed on the rear panel.

### 2.3.2 Power Connector

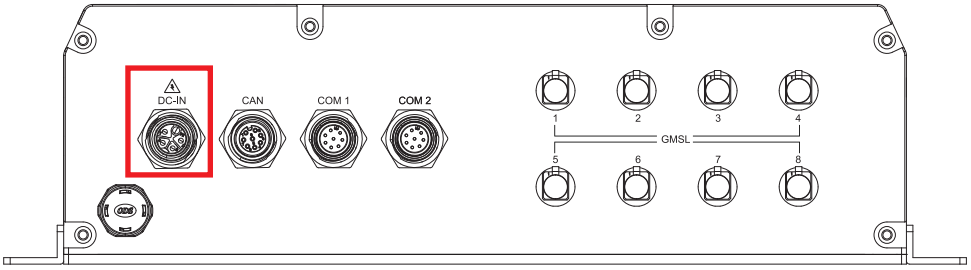


RAC-1000/RAC-1100 series supports 9V to 50V DC wide range power input by DC-IN connector in the rear side.

And the pin define is as below table:

| Pin Define | Pin No. | Definition |
|---|---|---|
| 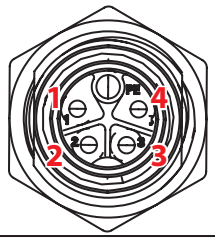 | 1 | V- |
| | 2 | V- |
| | 3 | V+ |
| | 4 | V+ |

### 2.3.3 CAN Port

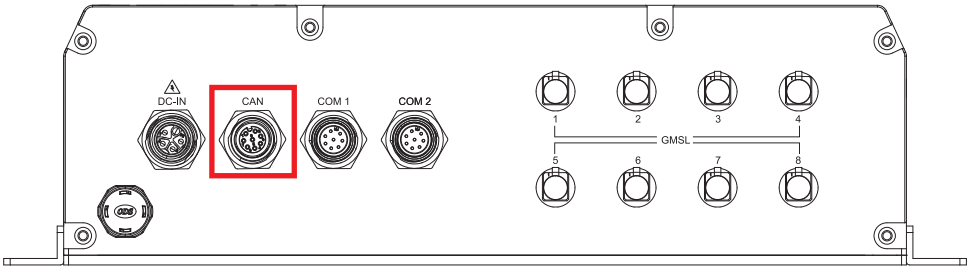


RAC-1000/RAC-1100 series supports CAN Bus by CAN connector in the rear side.

The pin define of CAN 1 & CAN 2 are listed as follows:

| Pin Define | Pin No. | Definition |
|---|---|---|
| 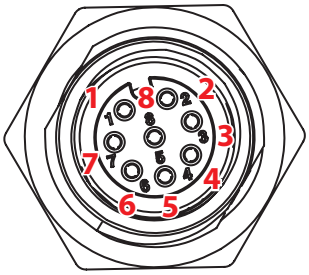 | 1 | CAN1_H |
| | 2 | CAN1_L |
| | 3 | GND1 |
| | 4 | NC |
| | 5 | CAN2_H |
| | 6 | CAN2_L |
| | 7 | GND2 |
| | 8 | NC |

### 2.3.4 COM Port

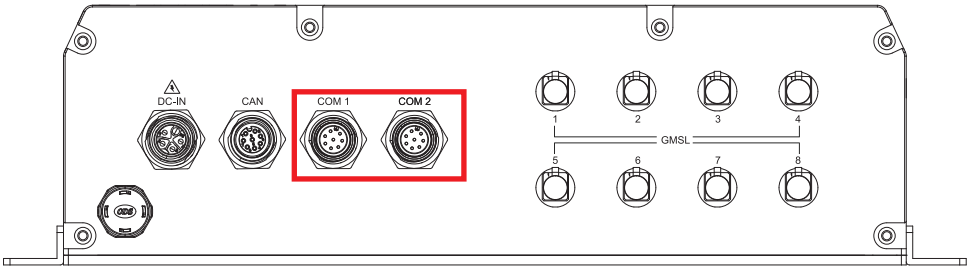


The COM 1, 2 can be configured for RS-232, RS-422, or RS-485 with auto flow control communication. The default definition of COM 1 and COM2 is RS-232; if you want to use RS-422 or RS-485, you must select the desired COM mode through GPIO.

The pin define of COM 1 & COM 2 are listed as follows:

| Pin Define | Pin No. | Definition |
|---|---|---|
| 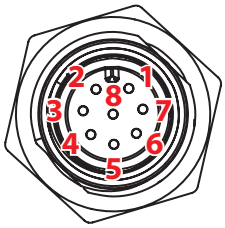 | 1 | DCD |
| | 2 | RXD |
| | 3 | TXD |
| | 4 | DTR |
| | 5 | NC |
| | 6 | RTS |
| | 7 | CTS |
| | 8 | GND |

### 2.3.5 GMSL Camera Port

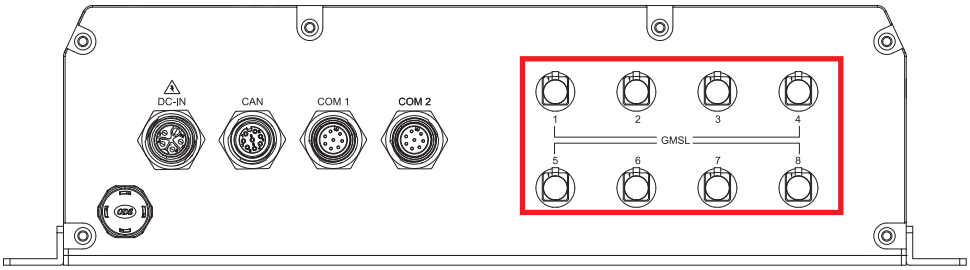


There are eight FAKRA connectors in the rear side of RAC-1000. Each camera connects to the RAC-1000 through a single coax cable. Using GMSL2 (Gigabit Multimedia Serial Link) connections, the cameras are connected to a two-port deserializer. The output of the deserializer is MIPI CSI-2.

## 2.3.6 Functions of RAC-1100

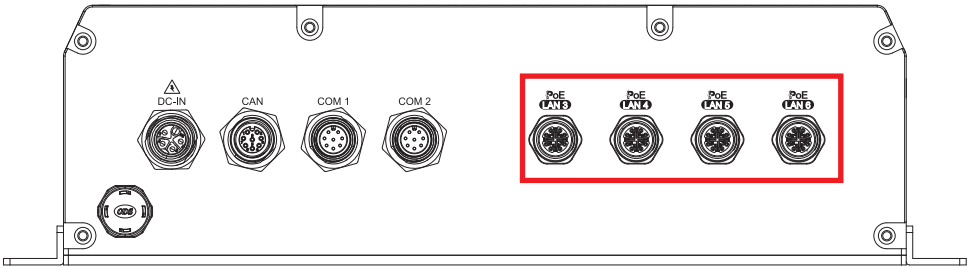


There are 4 LAN connectors in the rear side of RAC-1100. It supports IEEE 802.3at (PoE+) Power over Ethernet (PoE) connection delivering up to 25W/54V per port and 1000BASE-T gigabit data signals over standard Ethernet Cat 5/Cat 6 cable.

Each PoE connection is powered by Intel® I350 Gigabit Ethernet controller and independent PCI express interface to connect with multi-core processor for network and data transmit optimization.

PS. Suggest to use PoE function when power input is over 24V.

The pin define of LAN 3 & LAN 6 are listed as follows:

| Serial Port | Pin No. | 10/100 Mbps | 1000 Mbps | PoE |
|---|---|---|---|---|
| 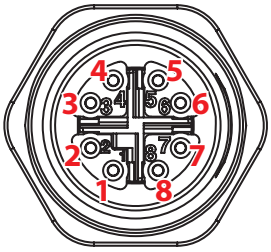 | 1 | TX- | MDI0_N | PoE+ |
| | 2 | TX+ | MDI0_P | PoE+ |
| | 3 | RX- | MDI1_N | PoE- |
| | 4 | RX+ | MDI1_P | PoE- |
| | 5 | ----- | MDI2_N | ----- |
| | 6 | ----- | MDI2_P | ----- |
| | 7 | ----- | MDI3_N | ----- |
| | 8 | ----- | MDI3_P | ----- |

# 3

# SYSTEM SETUP

## 3.1 How to Open Your RAC-1000

### 3.1.1 DC-IN/CAN/COM/USB/LAN/HDMI/Flash

**Step 1** Remove waterproof cap.

**Step 2** Confirm connector pin defined. (Example LAN).

**Step 3** Confirm wire.

**Step 4** Locked.

### 3.1.2 GMSL

**Step 1** Remove the GMSL rubber corks on connector.

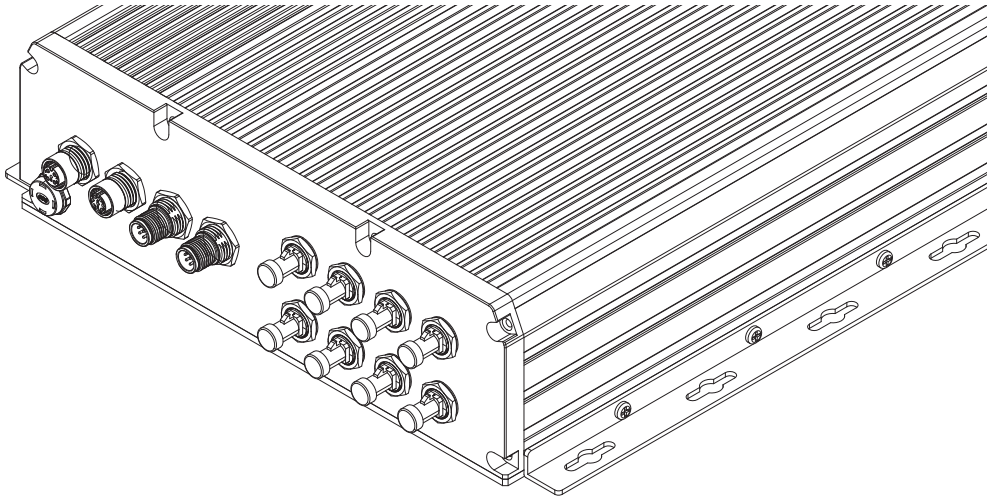

**Step 2** Install plug.

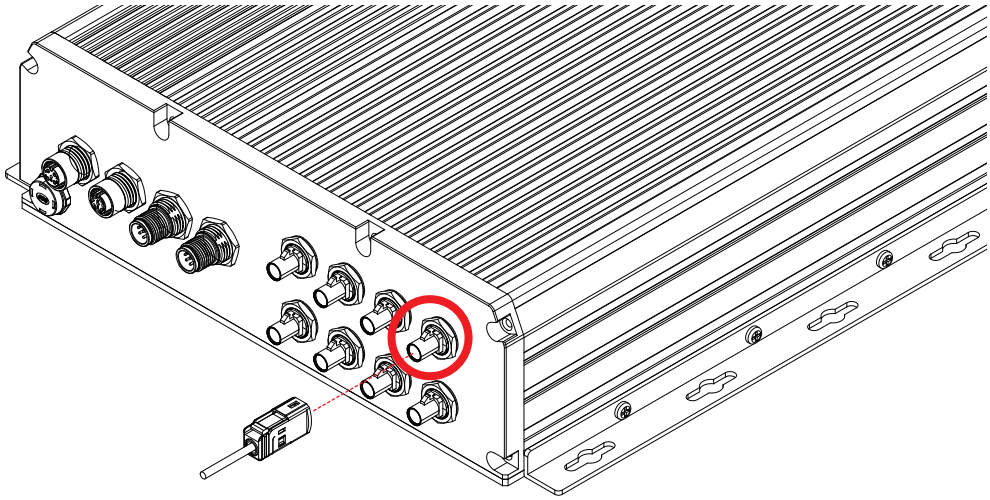

**Step 3** Finish.

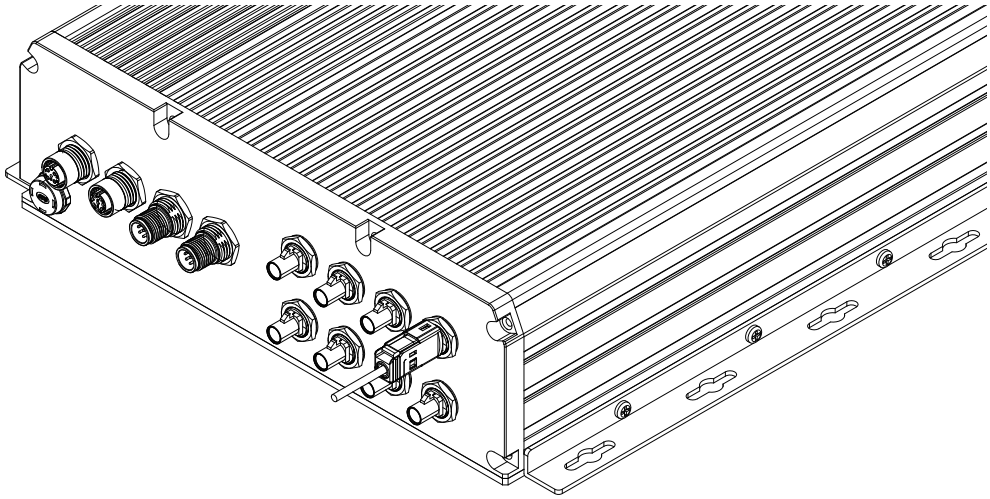

## 3.2 Mounting Your RAC-1000/RAC-1100

**Step 1** Fasten eight PHILLIPS #10-32 screws.

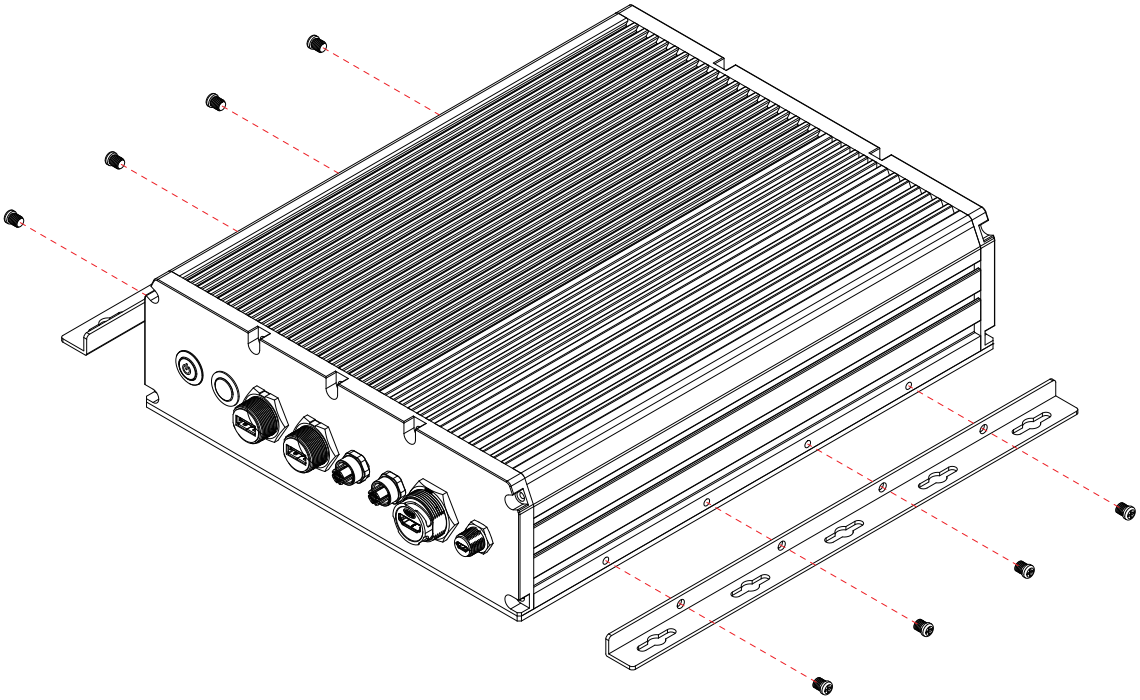

**Step 2** Finish.

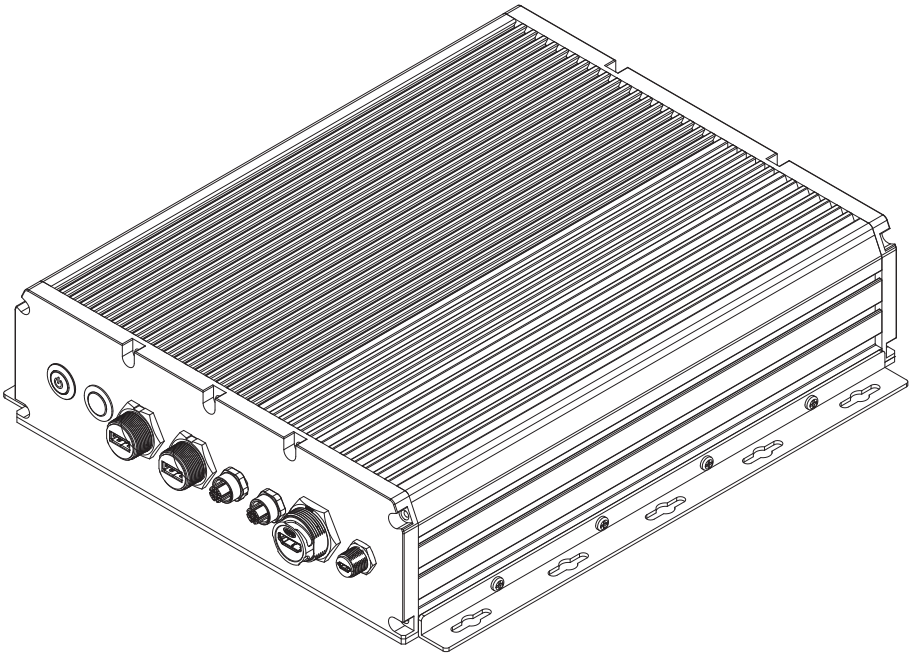

# 4

# SOFTWARE SETUP

## 4.1 Peripheral Interface Guide

For I/O support and example please follow this link:

https://github.com/VecowSoftware/RAC-1000_IO_Sample

## 4.2 Flash image to Your RAC-1000/RAC-1100

Before starting the flashing process, be sure the RAC-1000 is turned off and disconnected from the power. You also need to prepare a host computer running Ubuntu 20.04 or later.

### 4.2.1 Prepare the host computer

**Step 1** Open a terminal on host computer and disable the automount of new external storage devices temporarily. On most distributions of Debian-based Linux, you can do this using the following command:

```
$ sudo systemctl stop udisks2.service
```

**Step 2** Run the following script to ensure that the host computer has the "nfs-kernel-server" service running:

```
$ sudo service nfs-kernel-server start
```

### 4.2.2 Download the OS image file to the host computer

**Step 1** Download the OS image package file. The file name will be similar to:

```
RAC-1000_64GB_EMMC-BOOT_JetPack5.1.1_230731.tbz2
```

**Step 2** Check the MD5 Checksum of the OS image package

```
$ sudo md5sum -c ./ RAC-1000_64GB_EMMC-BOOT_JetPack5.1.1_230731.tbz2.md5
```

**Step 3** Open a Linux terminal on host computer and issue the following command to extract compressed image files:

```
$ sudo tar xvf RAC-1000_64GB_EMMC-BOOT_JetPack5.1.1_230731.tbz2
--use-compress-program=lbzip2
```

### 4.2.3 Connect RAC-1000 to the host computer

**Step 1** Connect the power adapter to the RAC-1000. Connect the Micro USB cable to the “Flash” Port on RAC-1000 and the other end to an available USB port on the host PC. Make sure you have only ONE RAC-1000 device in recovery mode plugged in the host.

**Step 2** Press and hold the “RECOV” button.

**Step 3** While holding the “RECOV” button, power on the system. Continue to hold the “RECOV” button for two seconds, and release.

**Step 4** Now that the device is in recovery mode, issue “lsusb” command on host PC to find a new USB device:

```
BUS 003 Device 005: ID 0955:7e19 Nvidia Corp.
```

### 4.2.4 Flash image to the RAC-1000

**Step 1** Open a terminal on host PC, then access the package folder you extracted in step 4.2.2-3.

**Step 2** Run the following script to install the right dependencies:

```
$ sudo ./l4t_flash_prerequisites.sh
```

**Step 3** Run this command from the decompressed folder to flash the image:

```
$ sudo ./RAC-1000_flash.sh
```

**Step 4** Once the process finished, you should see the following log:

```
Ongoing processes: 11873
Ongoing processes: 11873
Ongoing processes: 11873
Ongoing processes: 11873
Ongoing processes: 11873
Ongoing processes: 11873
Ongoing processes: 11873
Ongoing processes: 11873
Ongoing processes: 11873
Ongoing processes: 11873
Ongoing processes: 11873
Ongoing processes: 11873
Ongoing processes: 11873
Ongoing processes: 11873
Ongoing processes: 11873
Ongoing processes: 11873
Ongoing processes: 11873
```

# A

# APPENDIX A : GMSL Camera Guide (RAC-1000 Only)

## Before you start

Please connect the camera cable to GMSL port before power on the RAC-1000.

To initialize the GMSL camera, you can access the following path

```
$ cd /usr/src/tools/RAC-1000/camera/
```

Or

https://github.com/VecowSoftware/RAC-1000_IO_Sample/tree/master/camera

to find the camera initial scripts.

# B

# APPENDIX B : Power Consumption

## B.1 RAC-1000

| Testing Board | RAC-1000 |
|---|---|
| RAM | 32 GB 256-bit LPDDR5 |
| USB-1 | USB Microsoft Wired Keyboard 600 |
| USB-2 | USB Mouse HP G1K28AA |
| Storage | 64 GB eMMC 5.1 |
| LAN 1 | 1.0 Gbps |
| LAN 2 | 1.0 Gbps |
| Camera | GMSL Camera 8pcs |
| Graphics Output | HDMI |
| Power Plan | 30W/60W TDP |
| Power Source | Chroma 62006P-100-25 |
| Test Program | Stress-ng Test |

## B.2 12-core ArmR CortexR-A78AE v8.2 64-bit CPU, up to 2 GHz 2048-core NVIDIA Ampere™ GPU with 64 Tensor Cores (30W)

| CPU | Power Input | Ubuntu 20.04 LTS 64bit | | | |
|---|---|---|---|---|---|
| | | idle status CPU | | Run BurnInTest/Stress-ng Test | |
| | | Max Current | Max Consumption | Max Current | Max Consumption |
| 12-core Arm® Cortex®-A78AE v8.2 64-bit CPU, up to 2 GHz | 9V | 2.461A | 22.14W | 5.050A | 45.45W |
| | 12V | 1.829A | 21.94W | 3.782A | 45.39W |
| | 24V | 0.995A | 23.88W | 1.885A | 45.24W |
| | 36V | 0.705A | 25.39W | 1.357A | 48.85W |
| | 50V | 0.505A | 25.26W | 0.049A | 52.45W |

## B.3 12-core ArmR CortexR-A78AE v8.2 64-bit CPU, up to 2 GHz 2048-core NVIDIA Ampere™ GPU with 64 Tensor Cores (50W)

| CPU | Power Input | Ubuntu 20.04 LTS 64bit | | | |
|---|---|---|---|---|---|
| | | idle status CPU | | Run BurnInTest/Stress-ng Test | |
| | | Max Current | Max Consumption | Max Current | Max Consumption |
| 12-core Arm® Cortex®-A78AE v8.2 64-bit CPU, up to 2 GHz | 9V | 1.475A | 13.28W | 6.320A | 56.88W |
| | 12V | 1.097A | 13.16W | 4.549A | 54.59W |
| | 24V | 0.622A | 14.92W | 2.266A | 54.38W |
| | 36V | 0.474A | 17.05W | 1.556A | 56.02W |
| | 50V | 0.394A | 19.68W | 1.136A | 56.82W |

# C

# APPENDIX C : Supported Expansion Module List

## C.1 Supported 5G/4G/GPS List

| Type | Model | Support Standard |
|---|---|---|
| M.2 KEY B | Quectel EM060K | LTE Category 6<br>Worldwide LTE and UMTS/HSPA+ Coverage |
| M.2 KEY B | Telit LN920A6 | LTE Category 6<br>Worldwide LTE-A and 3G/HSPA+ Coverage |
| M.2 KEY B | Quectel RM520N | 5G sub-6GHz<br>Worldwide 5G and LTE-A coverage |
| M.2 KEY B | CINTERION Thales_MV31-W | 5G sub-6GHz<br>Global 5G coverage and LTE Cat. 20 fallback |
| M.2 KEY B | CINTERION Telit_MV32-W | 5G sub-6GHz<br>Global 5G coverage and LTE Cat. 20 and 3G fallback |

## C.2 Supported Wi-Fi/Bluetooth List

| Type | Model | Support Standard |
|---|---|---|
| M.2 KEY E | SparkLAN_WNFT-237ACN(BT) | IEEE 802.11ac/a/b/g/n<br>BT5.0 |
| M.2 KEY E | jjPlus JWW6051 | IEEE 802.11ac/a/b/g/n (2T2R)<br>BT5.0 |
| M.2 KEY E | Intel 8265NGW | IEEE 802.11a/b/g/n/ac<br>BT5.2 |

** If more help is needed, please contact Vecow Technical Support.

For further support information, please visit www.vecow.com

This document is released for reference purpose only.
All product offerings and specifications are subject to change without prior notice.
No part of this publication may be reproduced in any form or by any means, electric, photocopying, or recording, without prior authorization from the publisher.
The rights of all the brand names, product names, and trademarks belong to their respective owners.
© Vecow Co., Ltd. 2025. All rights reserved.