RPS630-R680E
RPS630-Q670E

BTL-S/14th/13th/12th Gen Intel® Core™

Desktop

ATX

E131107

IoT Solutions Alliance

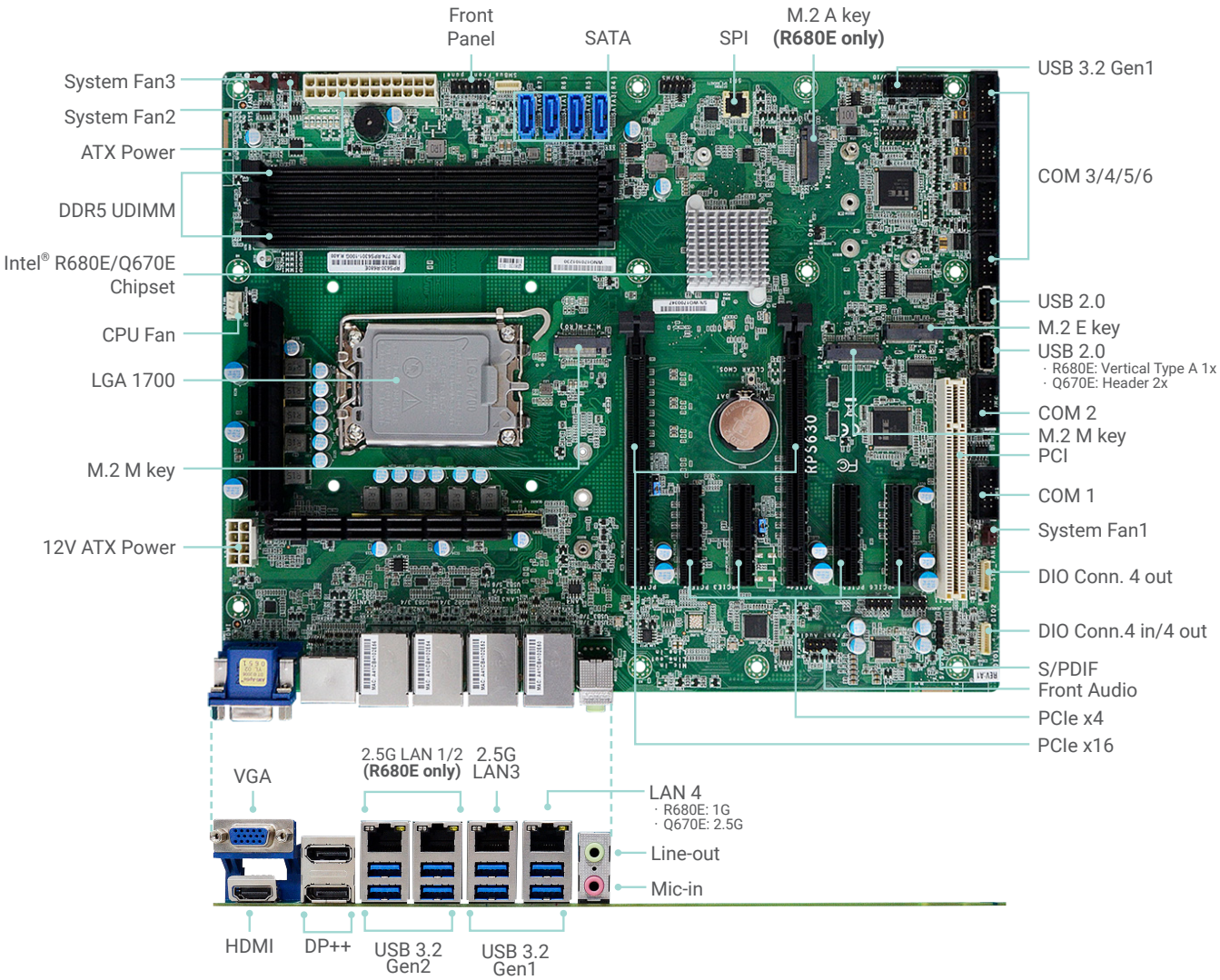

Top View (RPS630-R680E)

KEY FEATURES

DDR5

4 DDR5 UDIMM up to 192GB

4K High Resolution

Supports 4K resolution

Quad Displays

VGA, 2 DP++, HDMI

Multiple Expansion

2 PCIe x16, 4 PCIe x4,
1 PCI, 2 M.2 M key,
1 M.2 A Key(OOB),
1 M.2 E Key

Rich I/O

4 Intel 2.5GbE, 6 COM,
4 USB 3.2 Gen2,
6 USB 3.2 Gen1,
3 USB 2.0

BLOCK DIAGRAM

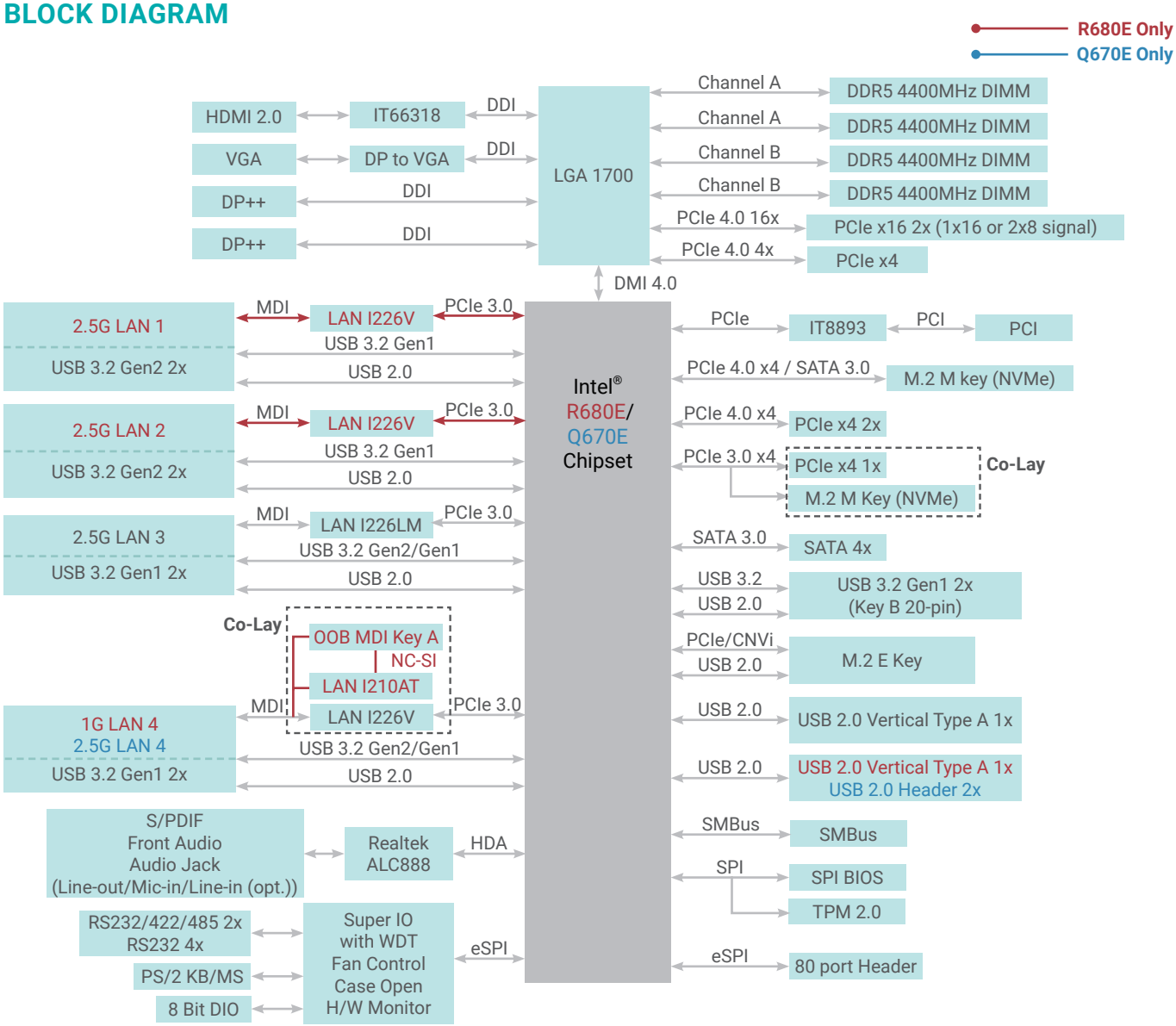

MECHANICAL DRAWING

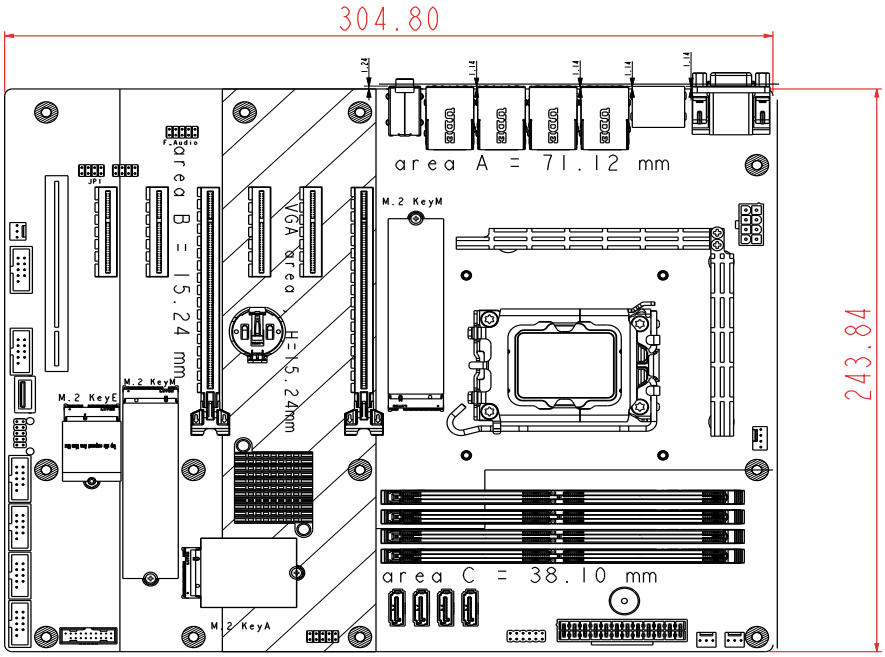

SPECIFICATION

Model Name		RPS630-R680E	RPS630-Q670E
SYSTEM	Processor	Intel® Bartlett Lake-S P-Core Only LGA 1700 Socket Processors, TDP support up to 125W Intel® Core™ 9 273PQE (12 Cores, 36M Cache, up to 5.9 GHz); 125W Intel® Core™ 9 273PE (12 Cores, 36M Cache, up to 5.7 GHz); 65W Intel® Core™ 9 273PTE (12 Cores, 36M Cache, up to 5.5 GHz); 45W Intel® Core™ 7 253PQE (10 Cores, 33M Cache, up to 5.7 GHz); 125W Intel® Core™ 7 253PE (10 Cores, 33M Cache, up to 5.5 GHz); 65W Intel® Core™ 7 253PTE (10 Cores, 33M Cache, up to 5.4 GHz); 45W Intel® Core™ 5 223PQE (8 Cores, 24M Cache, up to 5.5 GHz); 125W Intel® Core™ 5 223PE (8 Cores, 24M Cache, up to 5.4 GHz); 65W Intel® Core™ 5 223PTE (8 Cores, 24M Cache, up to 5.4 GHz); 45W Intel® Core™ 5 213PE (8 Cores, 24M Cache, up to 5.2 GHz); 65W Intel® Core™ 5 213PTE (8 Cores, 24M Cache, up to 5.2 GHz); 45W	
		Intel® Bartlett Lake-S Hybrid LGA 1700 Socket Processors, TDP support up to 125W Intel® Core™ 7 251E (24 Cores, 36M Cache, up to 5.6 GHz); 65W Intel® Core™ 7 251TE (24 Cores, 36M Cache, up to 5.4 GHz); 45W Intel® Core™ 5 221E (14 Cores, 24M Cache, up to 5.2 GHz); 65W Intel® Core™ 5 221TE (14 Cores, 24M Cache, up to 5.0 GHz); 45W Intel® Core™ 5 211E (10 Cores, 20M Cache, up to 4.9 GHz); 65W Intel® Core™ 5 211TE (10 Cores, 20M Cache, up to 4.8 GHz); 45W Intel® Core™ 3 201E (4 Cores, 12M Cache, up to 4.8 GHz); 60W Intel® Core™ 3 201TE (4 Cores, 12M Cache, up to 4.6 GHz); 45W	
		14th Generation P-Core Only Intel® LGA 1700 Socket Processors, TDP support up to 125W Intel® Core™ i9-14901E (8 Cores, 36M Cache, up to 5.6 GHz); 65W Intel® Core™ i9-14901TE (8 Cores, 36M Cache, up to 5.5 GHz); 45W Intel® Core™ i7-14701E (8 Cores, 33M Cache, up to 5.4 GHz); 65W Intel® Core™ i7-14701TE (8 Cores, 33M Cache, up to 5.2 GHz); 45W Intel® Core™ i5-14501E (6 Cores, 24M Cache, up to 5.2 GHz); 65W Intel® Core™ i5-14501TE (6 Cores, 24M Cache, up to 5.1 GHz); 45W Intel® Core™ i5-14401E (6 Cores, 24M Cache, up to 4.7 GHz); 65W Intel® Core™ i5-14401TE (6 Cores, 24M Cache, up to 4.5 GHz); 45W	
		14th Generation Intel® LGA 1700 Socket Processors, TDP support up to 125W Intel® Core™ I9-14900 (24 Cores, 36M Cache, up to 5.8 GHz); 65W Intel® Core™ I9-14900T (24 Cores, 36M Cache, up to 5.5 GHz); 35W Intel® Core™ I7-14700 (20 Cores, 33M Cache, up to 5.4 GHz); 65W Intel® Core™ I7-14700T (20 Cores, 33M Cache, up to 5.2 GHz); 35W Intel® Core™ I5-14500 (14 Cores, 24M Cache, up to 5 GHz); 65W Intel® Core™ I5-14500T (14 Cores, 24M Cache, up to 4.8 GHz); 35W Intel® Core™ I5-14400 (10 Cores, 20M Cache, up to 4.7 GHz); 65W Intel® Core™ I5-14400T (10 Cores, 20M Cache, up to 4.5 GHz); 35W Intel® Core™ I3-14100 (4 Cores, 12M Cache, up to 4.7 GHz); 60W Intel® Core™ I3-14100T (4 Cores, 12M Cache, up to 4.4 GHz); 35W Intel® 300 (2 Cores, 6M Cache, up to 3.9 GHz); 46W Intel® 300T (2 Cores, 6M Cache, up to 3.4 GHz); 35W	
		13th Generation Intel® LGA 1700 Socket Processors, TDP support up to 125W Intel® Core™ I9-13900E (24 Cores, 36M Cache, up to 5.2 GHz); 65W Intel® Core™ I9-13900TE (24 Cores, 36M Cache, up to 5.0 GHz); 35W Intel® Core™ I7-13700E (16 Cores, 30M Cache, up to 5.1 GHz); 65W Intel® Core™ I7-13700TE (16 Cores, 30M Cache, up to 4.8 GHz); 35W Intel® Core™ I7-13700T (16 Cores, 30M Cache, up to 4.9 GHz); 35W Intel® Core™ I5-13500E (14 Cores, 24M Cache, up to 4.6 GHz); 65W Intel® Core™ I5-13500TE (14 Cores, 24M Cache, up to 4.5 GHz); 35W Intel® Core™ I5-13500T (14 Cores, 24M Cache, up to 4.6 GHz); 35W Intel® Core™ I5-13400E (10 Cores, 20M Cache, up to 4.6 GHz); 65W Intel® Core™ I3-13100E (4 Cores, 12M Cache, up to 4.4 GHz); 60W Intel® Core™ I3-13100TE (4 Cores, 12M Cache, up to 4.1 GHz); 35W Intel® Core™ I3-13100T (4 Cores, 12M Cache, up to 4.2 GHz); 35W	
		12th Generation Intel® LGA 1700 Socket Processors, TDP support up to 125W Intel® Core™ i9-12900E (16 Cores, 30M Cache, up to 5.0 GHz); 65W Intel® Core™ i9-12900TE (16 Cores, 30M Cache, up to 4.8 GHz); 35W Intel® Core™ i7-12700E (12 Cores, 25M Cache, up to 4.8 GHz); 65W Intel® Core™ i7-12700TE (12 Cores, 25M Cache, up to 4.6 GHz); 35W Intel® Core™ i5-12500E (6 Cores, 18M Cache, up to 4.5 GHz); 65W Intel® Core™ i5-12500TE (6 Cores, 18M Cache, up to 4.3 GHz); 35W Intel® Core™ i3-12100E (4 Cores, 12M Cache, up to 4.2 GHz); 60W Intel® Core™ i3-12100TE (4 Cores, 12M Cache, up to 4.0 GHz); 35W Intel® Pentium® G7400E (2 Cores, 6M Cache, 3.6 GHz); 46W Intel® Pentium® G7400TE (2 Cores, 6M Cache, 3.0 GHz); 35W Intel® Celeron® G6900E (2 Cores, 4M Cache, 3.0 GHz); 46W Intel® Celeron® G6900TE (2 Cores, 4M Cache, 2.4 GHz); 35W	
	Chipset	Intel® R680E Chipset	Intel® Q670E Chipset
	Memory	Four 288-pin UDIMM up to 192GB (ECC/Non-ECC) Dual Channel DDR5 up to 4400 MHz *Speed support list follow User's Manual	Four 288-pin UDIMM up to 192GB (Non-ECC) Dual Channel DDR5 up to 4400 MHz *Speed support list follow User's Manual
	BIOS	AMI SPI 256Mbit	AMI SPI 256Mbit

SPECIFICATION

Model Name		RPS630-R680E	RPS630-Q670E
GRAPHICS	Controller	Intel® UHD Graphics 700 series	Intel® UHD Graphics 700 series
	Feature	OpenGL 4.5, DirectX 12, OpenCL 2.1 **HW Decode:** AVC/H.264, MPEG2, VC1/WMV9, JPEG/MJPEG, HEVC/H265, VP8, VP9 **HW Encode:** MPEG2, AVC/H264, JPEG, HEVC/H265, VP8, VP9	OpenGL 4.5, DirectX 12, OpenCL 2.1 **HW Decode:** AVC/H.264, MPEG2, VC1/WMV9, JPEG/MJPEG, HEVC/H265, VP8, VP9 **HW Encode:** MPEG2, AVC/H264, JPEG, HEVC/H265, VP8, VP9
	Display	1 x VGA 2 x DP++ 1 x HDMI 2.0a **VGA:** resolution up to 1920x1200 @ 60Hz **DP++:** resolution up to 4096x2304 @ 60Hz **HDMI:** resolution up to 4096x2160 @ 24Hz	1 x VGA 2 x DP++ 1 x HDMI 2.0a **VGA:** resolution up to 1920x1200 @ 60Hz **DP++:** resolution up to 4096x2304 @ 60Hz **HDMI:** resolution up to 4096x2160 @ 24Hz
	Quad Displays	VGA + 2 DP++ + HDMI	VGA + 2 DP++ + HDMI
EXPANSION	Interface	2 x PCIe x16 (Gen 4, 16 or 8+8) - Support PCIE1/PCIE4 : single at x16(PCIE1) - Support PCIE1/PCIE4 : dual at x8(PCIE1)/x8(PCIE4) - Support PCIE1 : Riser card x16 or x8/x8 selected by BOM change 3 x PCIe x4 (Gen 4, open edge) 1 x PCIe x4 (Gen 3, open edge, opt. share M.2-M2, function selected by BIOS.) 1 x PCI	2 x PCIe x16 (Gen 4, 16 or 8+8) - Support PCIE1/PCIE4 : single at x16(PCIE1) - Support PCIE1/PCIE4 : dual at x8(PCIE1)/x8(PCIE4) - Support PCIE1 : Riser card x16 or x8/x8 selected by BOM change 3 x PCIe x4 (Gen 4, open edge) 1 x PCIe x4 (Gen 3, open edge, opt. share M.2-M2, function selected by BIOS.) 1 x PCI
	M.2	1 x M.2 2230 E key (PCIe/USB 2.0/Intel CNVi/Wifi 6E) 1 x M.2 A key for M2-OOB 1 x M.2 2242/2260/2280 M key (PCIe x4 Gen4 NVMe, SATA) 1 x M.2 2242/2260/2280 M key (default, PCIe x4 Gen3 NVMe share PCIe#6, function selected by BIOS.)	1 x M.2 2230 E key (PCIe/USB 2.0/Intel CNVi/Wifi 6E) 1 x M.2 2242/2260/2280 M key (PCIe x4 Gen4 NVMe, SATA) 1 x M.2 2242/2260/2280 M key (default, PCIe x4 Gen3 NVMe share PCIe#6, function selected by BIOS.)
AUDIO	Audio Codec	Realtek ALC888S	Realtek ALC888S
ETHERNET	Controller	1 x Intel® I226-LM (Core i9/i7/i5 support iAMT) 1 x Intel® I210-AT (co-lay I226-V) 2 x Intel® I226-V	1 x Intel® I226-LM (Core i9/i7/i5 support iAMT) 1 x Intel® I226-V
REAR I/O	Ethernet	3 x 2.5GbE (RJ-45) 1 x 1GbE (RJ-45, opt. 2.5GbE)	2 x 2.5GbE (RJ-45)
	USB	4 x USB 3.2 Gen 2 4 x USB 3.2 Gen 1	4 x USB 3.2 Gen 2 4 x USB 3.2 Gen 1
	Display	1 x VGA 2 x DP++ 1 x HDMI	1 x VGA 2 x DP++ 1 x HDMI
	Audio	1 x Line-out 1 x Mic-in 1 x Line-in (opt.)	1 x Line-out 1 x Mic-in 1 x Line-in (opt.)
INTERNAL I/O	Serial	2 x RS-232/422/485 4 x RS-232	2 x RS-232/422/485 4 x RS-232
	USB	2 x USB 3.2 Gen1 2 x USB 2.0 Vertical Type A	2 x USB 3.2 Gen1 1 x USB 2.0 Vertical Type A 2 x USB 2.0 (2.54mm pitch, Colay vertical Type A, opt.: MOQ required)
	Audio	1 x Front Audio 1 x S/PDIF	1 x Front Audio 1 x S/PDIF
	SATA	4 x SATA 3.0 (up to 6Gb/s) RAID 0/1/5/10	4 x SATA 3.0 (up to 6Gb/s) RAID 0/1/5/10
	PS/2	1 x PS/2 (2.54mm pitch)	1 x PS/2 (2.54mm pitch)
	DIO	4-IN / 8-OUT DIO	4-IN / 8-OUT DIO
	eSPI	1 x eSPI	1 x eSPI
	SMBus	1 x SMBus	1 x SMBus
WATCHDOG TIMER	Output & Interval	System Reset, Programmable via Software from 1 to 255 Seconds	System Reset, Programmable via Software from 1 to 255 Seconds
SECURITY	TPM	Nuvoton TPM2.0	Nuvoton TPM2.0
POWER	Type	ATX	ATX
	Connector	8-pin ATX 12V power 24-pin ATX power	8-pin ATX 12V power 24-pin ATX power
	Consumption	**Typical:** i9-14900K: 3.3V @ 0.69A (2.28W); 5V @ 0.95A (4.75W); 12V @ 1.26A (15.12W) **Max.:** i9-14900K: 3.3V @ 1.2A (3.96W); 5V @ 3.6A (18W); 12V @ 29.02A (348.24W)	**Typical:** i9-14900K: 3.3V @ 0.69A (2.28W); 5V @ 0.95A (4.75W); 12V @ 1.26A (15.12W) **Max.:** i9-14900K: 3.3V @ 1.2A (3.96W); 5V @ 3.6A (18W); 12V @ 29.02A (348.24W)
	RTC Battery	CR2032 Coin Cell	CR2032 Coin Cell
OS SUPPORT	Microsoft	Windows 10 IoT Enterprise 64-bit Windows 11 LTSC	Windows 10 IoT Enterprise 64-bit Windows 11 LTSC
	Linux	Linux	Linux

SPECIFICATION

Model Name		RPS630-R680E	RPS630-Q670E
ENVIRONMENT	Temperature	**Operating:** -5 to 65°C **Storage:** -20 to 70°C with RTC Battery; -40 to 85°C without RTC Battery	**Operating:** -5 to 65°C **Storage:** -20 to 70°C with RTC Battery; -40 to 85°C without RTC Battery
	Humidity	**Operating:** 5 to 95% RH **Storage:** 5 to 95% RH	**Operating:** 5 to 95% RH **Storage:** 5 to 95% RH
	MTBF	225,192 hrs @ 25°C; 146,216 hrs @ 40°C; 83,182 hrs @ 60°C; 63,337 hrs @ 70°C **Calculation Model:** Telcordia Issue 2 **Environment:** GB, GC - Ground Benign, Controlled	208,538 hrs @ 25°C; 135,107 hrs @ 40°C; 76,715 hrs @ 60°C; 58,368 hrs @ 70°C **Calculation Model:** Telcordia Issue 2 **Environment:** GB, GC - Ground Benign, Controlled
MECHANISM	Dimensions	ATX Form Factor 305mm (12") x 244mm (9.6")	ATX Form Factor 305mm (12") x 244mm (9.6")
	Height	**PCB:** 1.6mm **Top Side:** 33.3mm **Bottom Side:** 4mm	**PCB:** 1.6mm **Top Side:** 33.3mm **Bottom Side:** 4mm
CERTIFICATIONS	Certifications	CE, FCC Class B, RoHS, UKCA, KC, UL	CE, FCC Class B, RoHS, UKCA, KC, UL

ORDERING INFORMATION

Model Name	P/N	Memory	2.5GbE	1GbE	RS-232/422/485	USB 3.2 Gen2	USB 3.2 Gen1	USB 2.0	TPM 2.0	Power	Temp.
RPS630-Q670E	770-RPS6301-000G	4 UDIMM	2	0	2	4	6	3	dTPM	24-pin ATX/8-pin ATX 12V	-5 to 65°C
RPS630-R680E	770-RPS6301-100G		3	1				2			

PACKING LIST

- 1 RPS630 motherboard
- 1 COM port cables (Length: 300mm, 2 x COM ports)
- 1 Serial ATA data cable (Length: 500mm)
- 1 I/O shield
- 1 M.2 screw/standoff

OPTIONAL ITEMS

· USB 2.0 port cable (Length: 350/398mm)	A81-001066-016G
· USB 3.2 Gen1 port cable (Length: 320mm)	A81-001196-023G
· COM port cable (Length: 300mm, 2 x COM ports)	A81-015026-023G
· Serial ATA data cable (Length: 500mm, W/LOCK)	332-553001-005G
· Serial ATA data cable (Length: 500mm, W/LOCK, 90D)	A81-002128-017G
· Thermal solution (For 35W, Height: 29.39mm)	A71-101136-000G
· Thermal solution (For 65W, Height: 46mm)	A71-101137-000G
· Thermal solution (For 95W/125W, Height: 110mm)	A71-101145-000G
· DP to HDMI Dongle	612-D2H13M-000G
· M.2-COM4 (M.2 serial port module)	770-M2COM1-000G
· M.2-2LAN (M.2 LAN port module)	770-M22LN2-000G
· M.2-2PSE (M.2 PSE module)	770-M22PS2-000G

DFI reserves the right to change the specifications at any time prior to the product's release. Changes thereafter will be based on the product's revision. Please contact your sales representative for the exact revision offered in your area. All product names mentioned are trademarks of their respective companies. © September 10, 2026 DFI Inc.