TGS-1000 USER Manual

Intel® Core™ Ultra Processor Ultra-Compact Stackable AI PC
2.5G LAN, USB 3.2 Type-C, DC12V to 24V, 0°C to 55°C

Vecow

3.1.0 Edition 20250612

Record of Revision

Version	Date	Page	Description	Remark
1.00	2024/10/24	All	Official Release	
1.10	2024/11/14	v, 99, 100	Update	
2.00	2025/01/06	All	Update	
3.00	2025/02/08	All	Update	
3.10	2025/06/12	51, 59	Update	

Disclaimer

This manual is released by Vecow Co., Ltd. for reference purpose only. All product offerings and specifications are subject to change without prior notice. It does not represent commitment of Vecow Co., Ltd. Vecow shall not be liable for direct, indirect, special, incidental, or consequential damages arising out of the use of the product; documentation; or for any infringements upon the rights of third parties, which may result from such use.

Declaration of Conformity

FCC

This equipment has been tested and found to comply with the limits for a Class A digital device, pursuant to part 15 of the FCC Rules. These limits are designed to provide reasonable protection against harmful interference when the equipment is operated in a commercial environment. This equipment generates, uses, and can radiate radio frequency energy, and if it is not installed and used in accordance with the instruction manual, it may cause harmful interference to radio communications. Operation of this equipment in a residential area is likely to cause harmful interference in which case the user will be required to correct the interference at his own expense.

CE

The products described in this manual complies with all applicable European Union (CE) directives if it has a CE marking. For computer systems to remain CE compliant, only CE-compliant parts may be used. Maintaining CE compliance also requires proper cable and cabling techniques.

Copyright and Trademarks

This document contains proprietary information protected by copyright. No part of this publication may be reproduced in any form or by any means, electric, photocopying, recording or otherwise, without prior written authorization by Vecow Co., Ltd. The rights of all the brand names, product names and trademarks belong to their respective owners.

Order Information

Part Number	Description
TGS-1000-165H	TGS-1000, onboard Intel Core Ultra 7 165H, 1 2.5G LAN, 2 USB 3.2 Gen 2, 1 USB 3.2 Gen 2x2 Type-C, 2 HDMI 2.1, 1 DP
TGS-1000-135H	TGS-1000, onboard Intel Core Ultra 5 135H, 1 2.5G LAN, 2 USB 3.2 Gen 2, 1 USB 3.2 Gen 2x2 Type-C, 2 HDMI 2.1, 1 DP
TGS-1500-165H	TGS-1500, onboard Intel Core Ultra 7 165H, 1 2.5G LAN, 2 USB 3.2 Gen 2, 1 USB 3.2 Gen 2x2 Type-C, 2 HDMI 2.1, 3 DP, Type-A MXM supported
TGS-1500-135H	TGS-1500, onboard Intel Core Ultra 5 135H, 1 2.5G LAN, 2 USB 3.2 Gen 2, 1 USB 3.2 Gen 2x2 Type-C, 2 HDMI 2.1, 3 DP, Type-A MXM supported
TGS-1550-165H	TGS-1500, onboard Intel Core Ultra 7 165H, 1 2.5G LAN, 2 USB 3.2 Gen 2, 1 USB 3.2 Gen 2x2 Type-C, 2 HDMI 2.1, 3 DP, Type-B MXM supported
TGS-1550-135H	TGS-1500, onboard Intel Core Ultra 7 135H, 1 2.5G LAN, 2 USB 3.2 Gen 2, 1 USB 3.2 Gen 2x2 Type-C, 2 HDMI 2.1, 3 DP, Type-B MXM supported

Optional Accessories

Part Number	Description
DDR5 48G	Certified DDR5 48GB 5600MHz RAM
DDR5 32G	Certified DDR5 32GB 4800/5600MHz RAM
DDR5 24G	Certified DDR5 24GB 5600MHz RAM
DDR5 16G	Certified DDR5 16GB 4800/5600MHz RAM
DDR5 8G	Certified DDR5 8GB 4800/5600MHz RAM
PWA-180W	180W, 24V, 90V AC to 264V AC Power Adapter with 3-pin Terminal Block
PWA-120W1	120W, 24V, 90V AC to 264V AC Power Adapter with 3-pin Terminal Block
TGS-101	Expansion Docking Module for 16-bit GPIO
TGS-102	Expansion Docking Module for 16-bit Isolated DIO (8DI, 8DO)
TGS-103	Expansion Docking Module for Type A MXM GPU (Without MXM GPU)
TGS-104	Expansion Docking Module for 2 Isolated COM (RS-232/422/485)
TGS-105	Expansion Docking Module for 2 USB3
TGS-106	Expansion Docking Module for 2 1G LAN
TGS-107	Expansion Docking Module for 4G Module
VESA Mount	VESA Mounting Kit
DIN-RAIL	DIN Rail Kit
Table Stand	Table Stand for TGS-1500/TGS-1550
M.2 Storage Module	M.2 Key M Storage Module
4G Module	4G/GPS Module with Antenna
WiFi & Bluetooth Module	WiFi & Bluetooth Module with Antenna

* For the selection and use guide of TGS-100, please refer to Appendix F.

Table of Contents

CHAPTER 1 GENERAL INTRODUCTION 1

1.1 Overview 1
1.2 Features 2
1.3 Product Specification 2
1.3.1 Specifications of TGS-1000 2
1.3.2 Specifications of TGS-1500 4
1.3.3 Specifications of TGS-1550 6
1.4 Mechanical Dimension 8
1.4.1 TGS-1000 Mechanical Drawing 8
1.4.2 TGS-1500 Mechanical Drawing 8
1.4.3 TGS-1550 Mechanical Drawing 9

CHAPTER 2 GETTING TO KNOW YOUR TGS-1000 10

2.1 Packing List 10
2.1.1 TGS-1000 Packing List 10
2.1.2 TGS-1500/1550 Packing List 11
2.2 Front Panel I/O & Functions 12
2.3 Rear Panel I/O & Functions 15
2.4 Main Board Expansion Connectors 19
2.5 Main Board Jumper Settings 27

CHAPTER 3 SYSTEM SETUP 29

3.1 Installing DDR5 SO-DIMM Module 29
3.2 Installing M.2 33
3.3 Installing Antenna Cable 46
3.4 Dock Your TGS-100 Series 50

3.5 Mounting Your TGS-1000 Series 66
3.5.1 TGS-1000 Wall mount 66
3.5.2 TGS-1000 VESA mount 67
3.5.3 TGS-1500 Wall mount 69
3.5.4 TGS-1500 VESA mount 70
3.5.5 TGS-100 Wall mount 72
3.5.6 TGS-100 VESA mount 73

CHAPTER 4 BIOS AND DRIVER SETUP 75

4.1 BIOS Setting 75
4.1 BIOS Setting 75
4.2 Main Menu 76
4.3 Advanced Function 77
4.4 Security Function 85
4.5 Boot Function 85
4.6 Save & Exit 86

APPENDIX A : Watchdog Function 87

APPENDIX B : Software Functions 89

APPENDIX C : RAID Functions 90

APPENDIX D : Power Consumption 97

APPENDIX E : Supported Memory & Storage List 100

APPENDIX F : Selection and Use Guide of TGS-100 102

1

GENERAL INTRODUCTION

1.1 Overview

The Vecow TGS-1000 Series is an ultra-compact, stackable AI PC powered by the all-new hybrid architecture Intel® Core™ Ultra Processor. Leveraging three dedicated engines—CPU, GPU, and NPU within a single processor—the TGS-1000 Series delivers AI-enhanced capabilities and is ideal for AI-accelerated processing, AI-assisted video conferencing, AI-ready immersive gameplay, and 4K streaming.

The TGS-1000 Series comprises two models : TGS-1000 and TGS-1500. The former serves as the foundational unit for the TGS-1500. Its modular design facilitates stacking up to four layers of multifunctional expansion boxes, including USB, isolated DIO, COM, LAN, and one layer for MXM docking. With support for up to five 4K displays via HDMI 2.1 and DisplayPort 1.4, and high-speed connectivity provided by one 2.5G LAN and three USB 3.0 ports (two Type-A and one Type-C), the TGS-1000 Series offers efficient AI inference performance at the edge.

The TGS-1000 Series features a compact yet rugged design, supporting an operating temperature range of 0°C to 55°C or 0°C to 45°C, with power input range options of 12V to 24V or 24V.

1.2 Features

- Intel® Core™ Ultra processors feature a hybrid CPU/GPU/NPU architecture, enhancing CPU productivity by up to 14%
- Intel® Core™ Ultra processors integrated with maximum 34 TOPS
- Multiple HDMI and DisplayPort display interfaces support max 5 independent displays, up to 4K resolution
- 2 USB 3.2 Gen 2, 1 USB 3.2 Gen 2x2 Type-C with DP, 2 USB 2.0, 1 2.5G LAN with Intel® TSN
- 3 M.2 Socket for storage and expansion
- Modular Design for flexible expansion : USB, Isolated DIO, COM, LAN or 4G/LTE
- DC 12V to 24V Power Input, 0°C to 55°C operation
- Optional VHub One-Stop AIoT Solution Service supports OpenVINO™ toolkit for AI Computing

1.3 Product Specification

1.3.1 Specifications of TGS-1000

System	
Processor	Intel® Core™ Ultra 7 165H Processor (16 Cores) Intel® Core™ Ultra 5 135H Processor (14 Cores)
NPU	Integrated Intel® AI Boost neural processing unit
Chipset	Intel® SoC
GPU	Built-in processor graphics Intel® Arc™ GPU
BIOS	AMI
SIO	IT8659E
Memory	2 DDR5 5600MHz SO-DIMM, up to 96GB
Ethernet	
LAN	Intel® I226 2.5G LAN supports TSN
Audio	
Audio Codec	Realtek ALC888S-VD, 7.1 Channel HD Audio
Audio Interface	1 Mic-in, 1 Line-out

Storage	
M.2	• 1 M.2 Key M Socket (2280, PCIe 4.0 x4) • 1 M.2 Key M Socket (2242, PCIe 4.0 x4)
I/O Interface	
Display	• 2 HDMI 2.1 : Up to 4096 x 2304 @60Hz • 1 DisplayPort 1.4 : Up to 3840 x 2160 @60Hz by USB Type-C
USB	• 2 USB 3.2 Gen 2 Type A • 1 USB 3.2 Gen 2x2 Type C (5V/3A) • 2 USB 2 Type A
LED	Power, HDD
Expansion	
M.2	1 M.2 Key E Socket (2230, PCIe x1/USB)
Docking Expansion	2 Expansion Connector for docking module
Power	
Power Input	12V to 24V DC-in
Power Interface	3-pin Terminal Block : V+, V-, Frame Ground
Others	
Watchdog Timer	Reset : 1 to 255 sec./min. per step
HW Monitor	Monitoring temperature, voltages. Auto throttling control when CPU overheats.
Software Support	
OS	Windows 11, Windows 10, Linux
Mechanical	
Dimension (W x L x H)	117mm x 120mm x 38mm (4.61"x 4.72"x 1.49")
Weight	0.9 kg (1.98 lb)
Mounting	• Wallmount by mounting bracket • VESA Mount (Optional) • DIN Rail Mount (Optional)
Environment	
Operating Temperature	0°C to 55°C (-13°F to 131°F), with air flow
Storage Temperature	-40°C to 85°C (-40°F to 185°F)
Humidity	5% to 95% Humidity, non-condensing
Relative Humidity	95% at 55°C
Shock/Vibration	• IEC 61373: 2010 • Railway Applications : Rolling Stock Equipment, Shock and Vibration Tests
EMC	CE, FCC, for TGS-1000 docking module

1.3.2 Specifications of TGS-1500

System	
Processor	Intel® Core™ Ultra 7 165H Processor (16 Cores) Intel® Core™ Ultra 5 135H Processor (14 Cores)
NPU	Integrated Intel® AI Boost neural processing unit
Chipset	Intel® SoC
GPU	• Built-in processor graphics Intel® Arc™ GPU • Independent MXM Graphic: By request
BIOS	AMI
SIO	IT8659E
Memory	2 DDR5 5600MHz SO-DIMM, up to 96GB
Ethernet	
LAN	Intel® I226 2.5G LAN supports TSN
Audio	
Audio Codec	Realtek ALC888S-VD, 7.1 Channel HD Audio
Audio Interface	1 Mic-in, 1 Line-out
Storage	
M.2	• 1 M.2 Key M Socket (2280, PCIe 4.0 x4) • 1 M.2 Key M Socket (2242, PCIe 4.0 x4)
I/O Interface	
Diaplay	• 2 HDMI 2.1 : Up to 4096 x 2304 @60Hz • 1 DisplayPort 1.4 : Up to 3840 x 2160 @60Hz by USBT ype-C • 2 DisplayPort 1.4 : Up to 4096 x 2304 @60Hz (By MXM)
USB	• 2 USB 3.2 Gen 2 Type A • 1 USB 3.2 Gen 2x2 Type C (5V/3A) • 2 USB 2 Type A
LED	Power, HDD

Expansion	
M.2	1 M.2 Key E Socket (2230, PCIe x1/USB)
Docking Expansion	2 Expansion Connector for TGS-1000 docking module
Power	
Power Input	24V DC-in
Power Interface	3-pin Terminal Block : V+, V-, Frame Ground
Others	
Watchdog Timer	Reset : 1 to 255 sec./min. per step
HW Monitor	Monitoring temperature, voltages. Auto throttling control when CPU overheats.
Software Support	
OS	Windows 11, Windows 10, Linux
Mechanical	
Dimension (W x L x H)	117mm x 120mm x 88.3mm (4.61"x 4.72"x 3.47")
Weight	1.4 kg (3.09 lb)
Mounting	• Wallmount by mounting bracket • VESA Mount (Optional) • DIN Rail Mount (Optional)
Environment	
Operating Temperature	0°C to 45°C (-13°F to 113°F), with air flow
Storage Temperature	-40°C to 85°C (-40°F to 185°F)
Humidity	5% to 95% Humidity, non-condensing
Relative Humidity	95% @55
Shock/Vibration	• IEC 61373 : 2010 • Railway Applications : Rolling Stock Equipment, Shock and Vibration Tests
EMC	CE, FCC, ICES, for TGS-1000 docking module

1.3.3 Specifications of TGS-1550

System	
Processor	Intel® Core™ Ultra 7 165H Processor (16 Cores) Intel® Core™ Ultra 5 135H Processor (14 Cores)
NPU	Integrated Intel® AI Boost neural processing unit
Chipset	Intel® SoC
GPU	• Built-in processor graphics Intel® Arc™ GPU • Independent MXM Graphic: By request
BIOS	AMI
SIO	IT8659E
Memory	2 DDR5 5600MHz SO-DIMM, up to 96GB
Ethernet	
LAN	Intel® I226 2.5G LAN supports TSN
Audio	
Audio Codec	Realtek ALC888S-VD, 7.1 Channel HD Audio
Audio Interface	1 Mic-in, 1 Line-out
Storage	
M.2	• 1 M.2 Key M Socket (2280, PCIe 4.0 x4) • 1 M.2 Key M Socket (2242, PCIe 4.0 x4)
I/O Interface	
Diaplay	• 2 HDMI 2.1 : Up to 4096 x 2304 @60Hz • 1 DisplayPort 1.4 : Up to 3840 x 2160 @60Hz by USBT ype-C • 2 DisplayPort 1.4 : Up to 4096 x 2304 @60Hz (By MXM)
USB	• 2 USB 3.2 Gen 2 Type A • 1 USB 3.2 Gen 2x2 Type C (5V/3A) • 2 USB 2 Type A
LED	Power, HDD

Expansion	
M.2	1 M.2 Key E Socket (2230, PCIe x1/USB)
Power	
Power Input	24V DC-in
Power Interface	3-pin Terminal Block : V+, V-, Frame Ground
Others	
Watchdog Timer	Reset : 1 to 255 sec./min. per step
HW Monitor	Monitoring temperature, voltages. Auto throttling control when CPU overheats.
Software Support	
OS	Windows 11, Windows 10, Linux
Mechanical	
Dimension (W x L x H)	117mm x 173mm x 88.2mm (4.61"x 6.81"x 3.46")
Weight	1.7 kg (3.74 lb)
Mounting	• Wallmount by mounting bracket • Table Stand (Optional)
Environment	
Operating Temperature	0°C to 45°C (-13°F to 113°F), with air flow
Storage Temperature	-40°C to 85°C (-40°F to 185°F)
Humidity	5% to 95% Humidity, non-condensing
Relative Humidity	95% @45
Shock/Vibration	• IEC 61373 : 2010 • Railway Applications : Rolling Stock Equipment, Shock and Vibration Tests
EMC	CE, FCC, ICES, EN50155, EN50121-3-2

1.4 Mechanical Dimension

1.4.1 TGS-1000 Mechanical Drawing

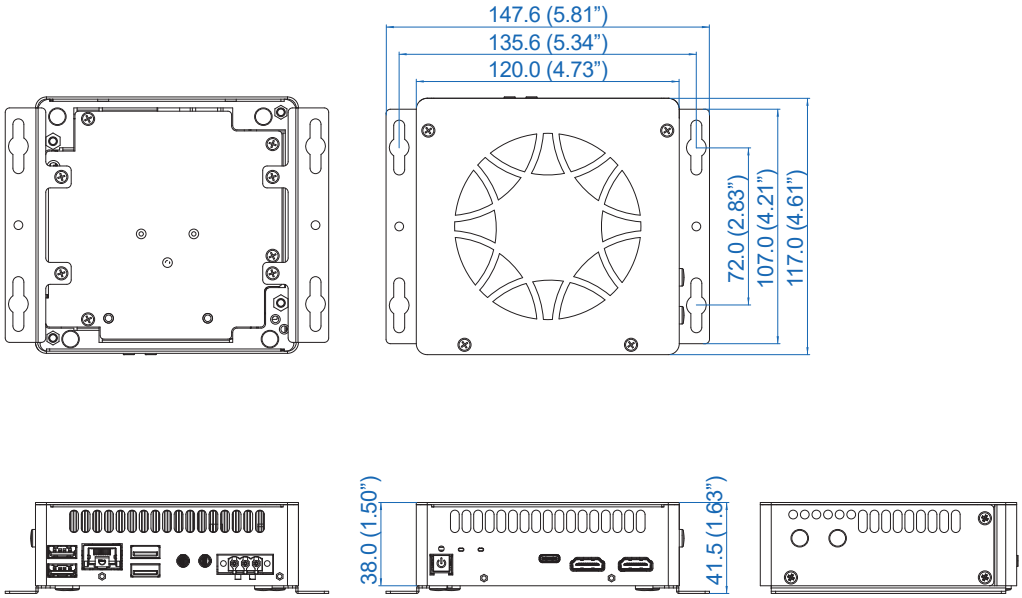

Unit: mm (inch)

1.4.2 TGS-1500 Mechanical Drawing

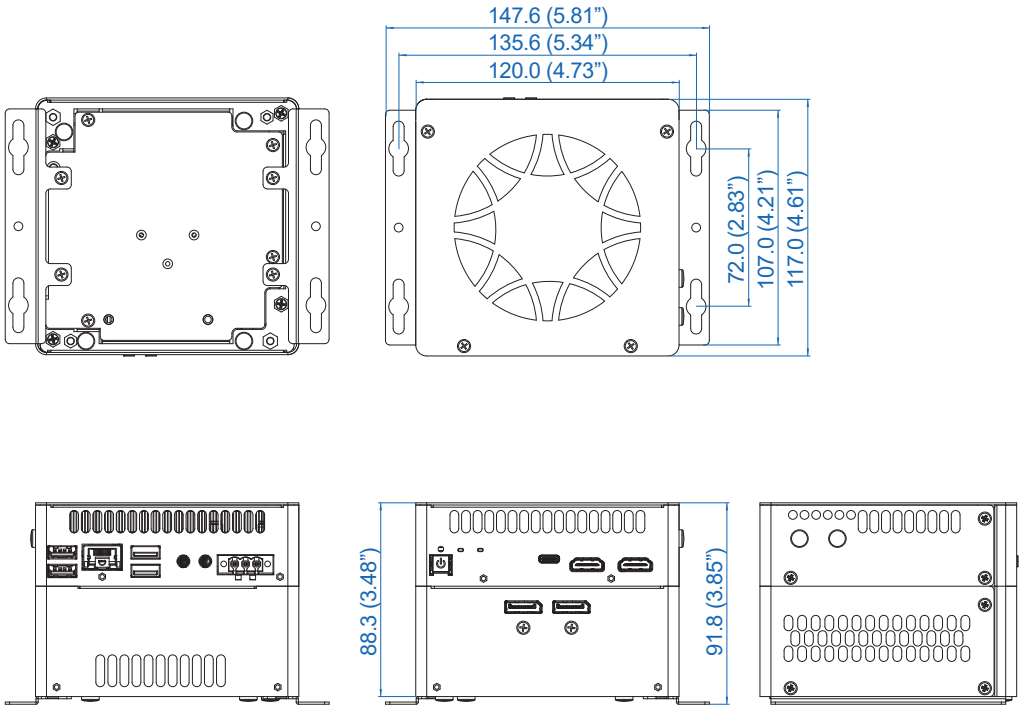

Unit: mm (inch)

1.4.3 TGS-1550 Mechanical Drawing

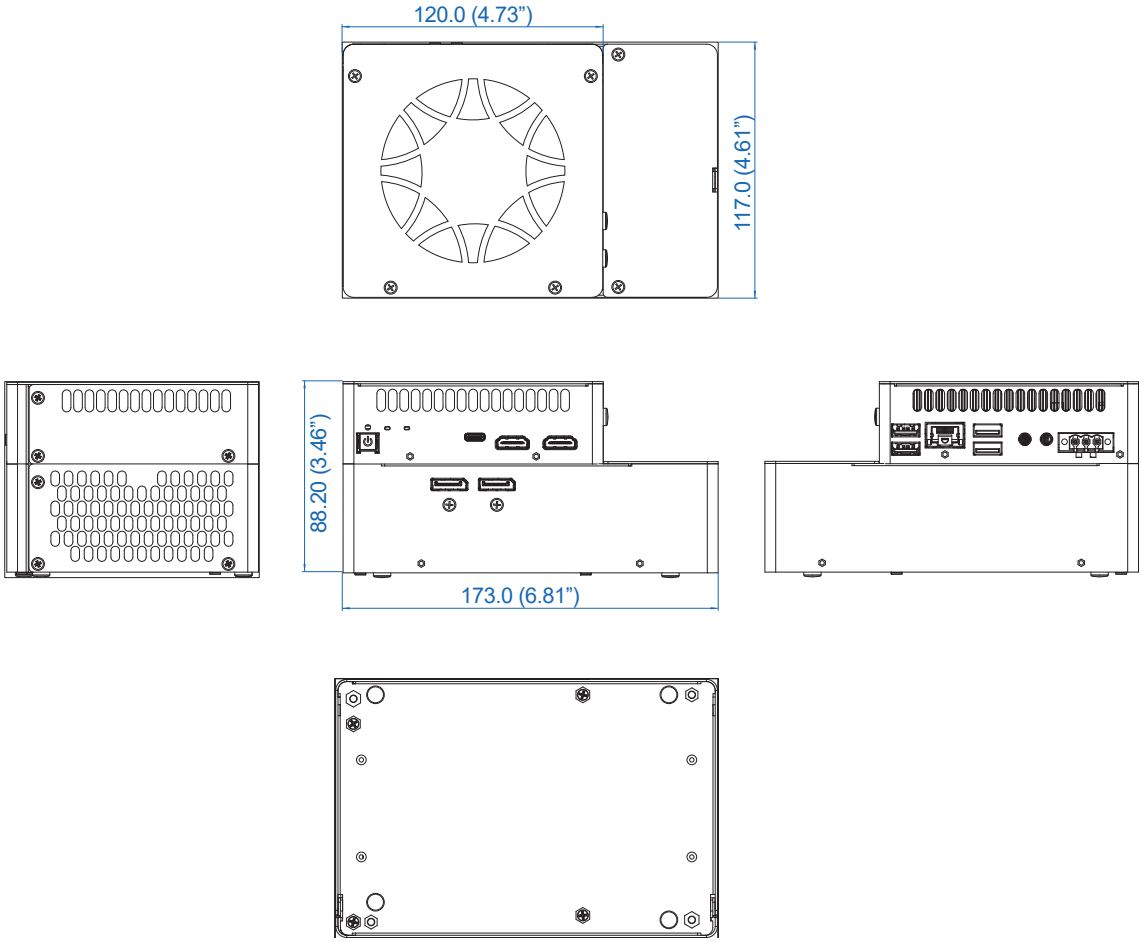

Unit: mm (inch)

2

GETTING TO KNOW YOUR TGS-1000

2.1 Packing List

2.1.1 TGS-1000 Packing List

Item	Description	Qty
1	TGS-1000 Stackable AI PC	1

Item	Description	Outlook	Usage	P/N	Qty
1	Flat head M3x4L		flat head M3x4L	53-2426204-80B	3
2	Wall-mounting bracket		Wall mount	62-03P1688-0FA	2
3	Terminal block plug pitch 5.0mm 3-pin		DC-IN	51-2411R03-S1B	1
4	Flat head M3x4L		Wall mount bracket	53-2470000-218	4
5	Thermal Pad_ 18x70x5.5mm		Thermal Pad _M.2 Key M 2280	53-4031742-203	1
6	Thermal Pad_ 18x30x5.25mm		Thermal Pad _M.2 Key M 2242	53-4031942-203	1

2.1.2 TGS-1500/1550 Packing List

Item	Description	Qty
2	TGS-1500/1550 Stackable AI PC	1

Item	Description	Outlook	Usage	P/N	Qty
1	Flat head M3x4L		Flat head M3x4L	53-2426204-80B	3
2	Copper pillars(M3x35L)		Copper pillars (M3x35L)	53-4012170-204	4
3	Screw M3 I Head (D=5.0 mm H=1.0 mm) Phillips L =20.5 mm Ni		Screw M3 I Head (D=5.0 mm H=1.0 mm) Phillips L =20.5 mm Ni	53-M029800-000	4
4	Wall-mounting bracket		Wall mount	62-03P1688-0FA	2
5	Terminal block plug pitch 5.0mm 3-pin		DC-IN	51-2411R03-S1B	1
6	Thermal Pad_ 18x70x5.5mm		Thermal Pad _M.2 Key M 2280	53-4031742-203	1
7	Thermal Pad_ 18x30x5.25mm		Thermal Pad _M.2 Key M 2242	53-4031942-203	1

2.2 Front Panel I/O & Functions

2.2.1 TGS-1000/TGS-1500 Front I/O & Functions

In Vecow's TGS-1000/1500 series family, all I/O connectors are located on the front panel. Most of the general connections to the computer device, such as TypeC, HDMI, are placed on the front panel.

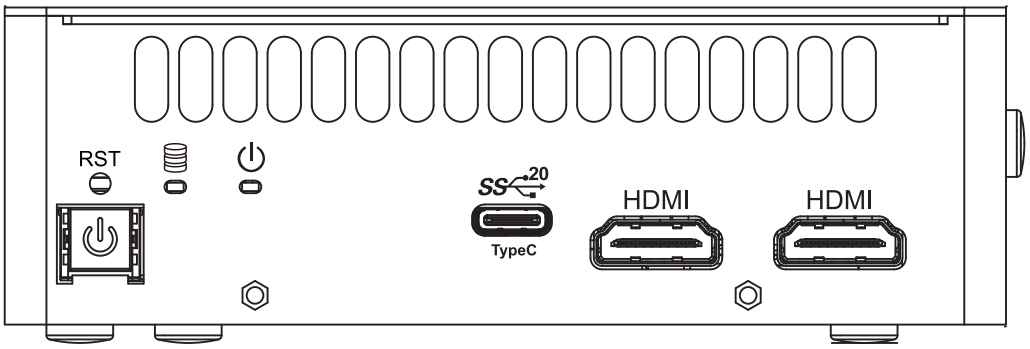

2.2.1.1 Reset Tact Switch

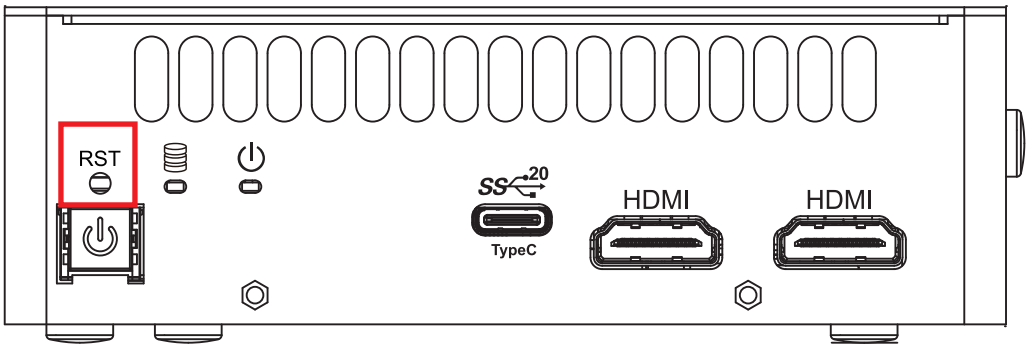

It is a hardware reset switch. Use this switch to reset the system without power off the system. Press the Reset Switch for a few seconds, then reset will be enabled.

2.2.1.2 Power Button

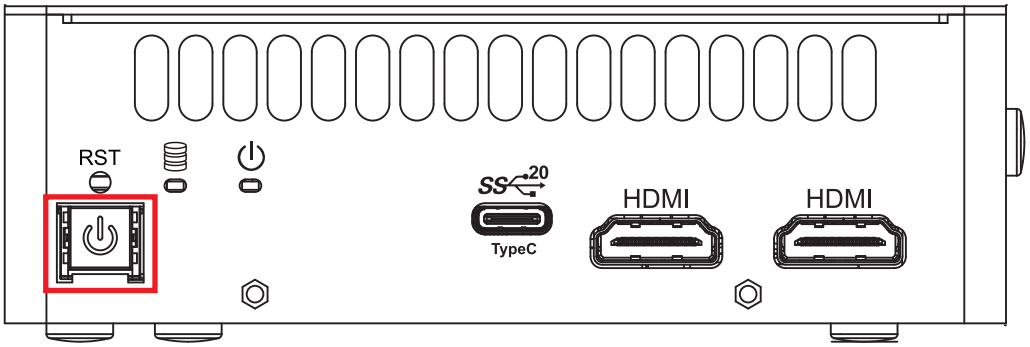

The Power Button is a non-latched switch with dual color LED indications. It indicates power status : S0, S3 and S5. More detail LED indications are listed as follows :

LED Color	Power Status	System Status
Solid Blue	S0	System working
Solid Orange	S3, S5	Suspend to RAM, System off with standby power

To power on TGS-1000/1500, please press the power button and then the blue LED is lightened. To power off the system, you can either command shutdown by OS operation, or just simply press the power button.

If system error, you can just press the power button for 4-seconds to shut down the machine directly. Please do note that a 4-second interval between each 2 power-on/ power-off operation is necessary in normal working status. (For example, once turning off the system, you have to wait for 4 seconds to initiate another power-on operation.)

2.2.1.3 PWR & HDD LED Indicator

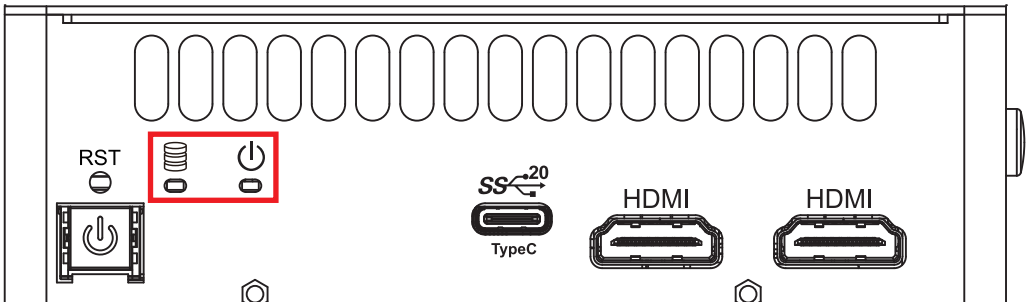

HDD LED/ Yellow : A hard disk/M.2 M key LED. If the LED is on, it indicates that TGS-1000/1500 storage is functional. If it is off, it indicates that the system's storage is not functional. If it is flashing, it indicates data access activities.

Power LED/ Green : If the LED is solid green, it indicates that the system is powered on.

LED Color	Power Status	System Status
Yellow	HDD	• On/Off : Storage status, function or not • Twinkling : Data transferring
Green	Power	System power status (on/off)

2.2.1.4 USB Type-C

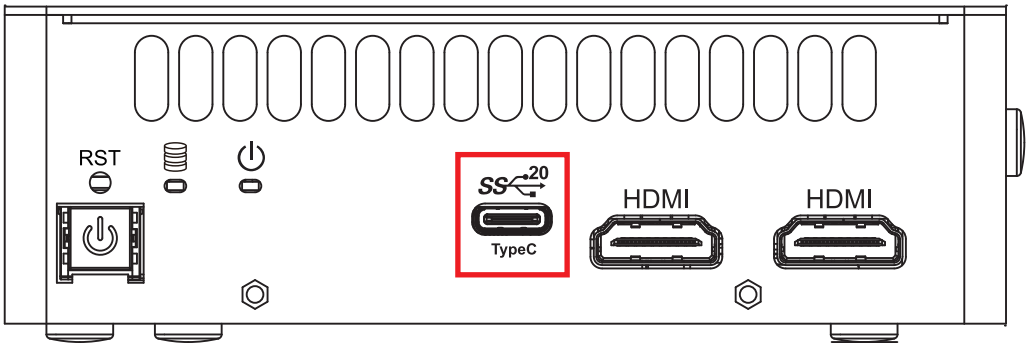

USB Type-C connector support up to 20GB per second data rate and DisplayPort 1.4a : Up to 3840 x 2160 @ 60Hz by USB Type-C in the front side of TGS-1000/TGS-1500 series.

2.2.1.5 HDMI

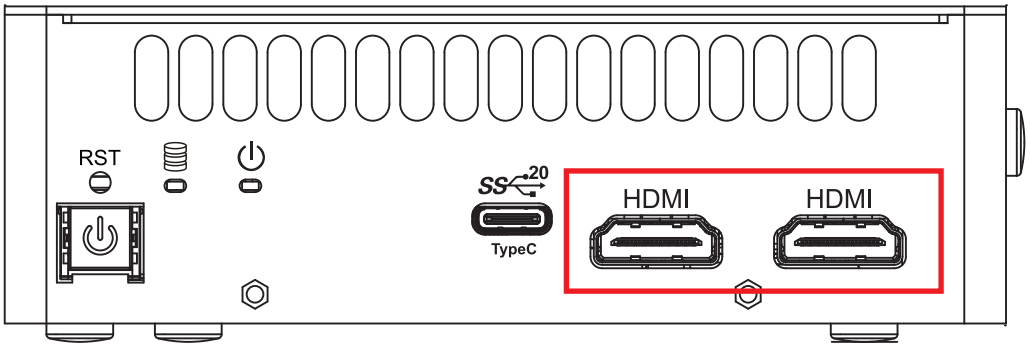

Onboard HDMI Port supports DDC channel mode. The connection supports up to 3840 x 2160 resolution at 60Hz.

2.3 Rear Panel I/O & Functions

2.3.1 TGS-1000/TGS-1500 Rear I/O & Functions

In Vecow's TGS-1000/1500 series family, some of the general connections to the computer device, such as DC-Input power connector, USB2.0/3.2 ports and RJ45 are placed on the rear panel.

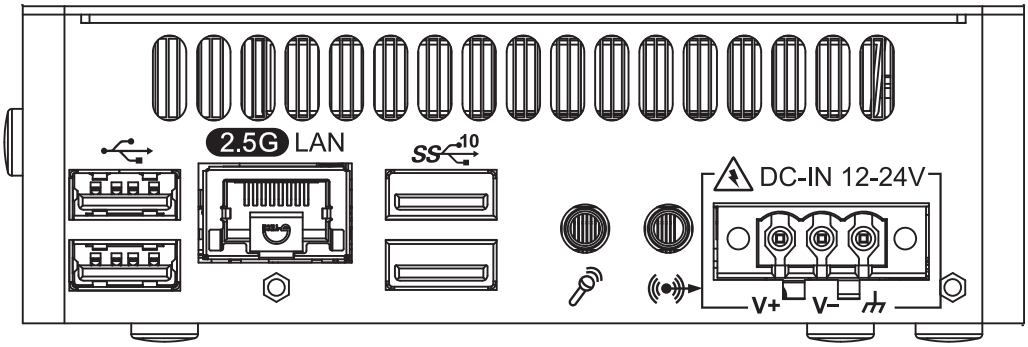

2.3.1.1 Power Terminal Block

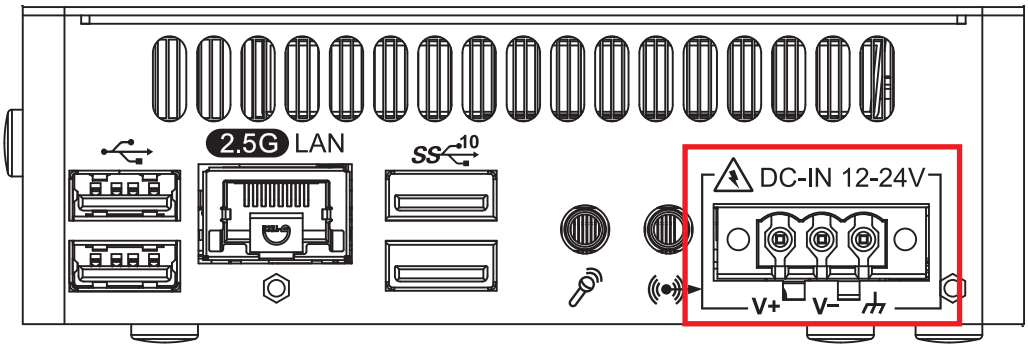

TGS-1000 supports 12V to 24V DC power input.

TGS-1500 supports 24V DC power input.

Pin No.	Definition	Pin No.	Definition
1	V+	2	V-
3	Earth GND		

2.3.1.2 USB2.0

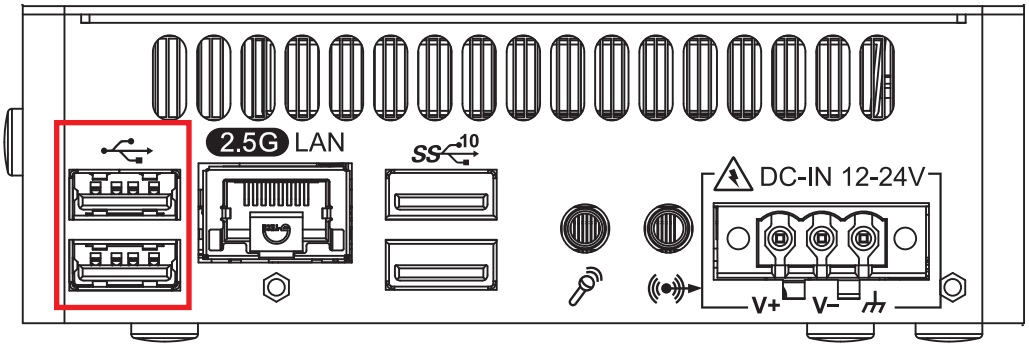

There are 2 USB 2.0 ports available supporting up to 480MB per second data rate in the Rear side of TGS-1000/1500. They are also compliant with the requirements of high speed (HS), full speed (FS) and low speed (LS).

2.3.1.3 USB 3.2 Gne2

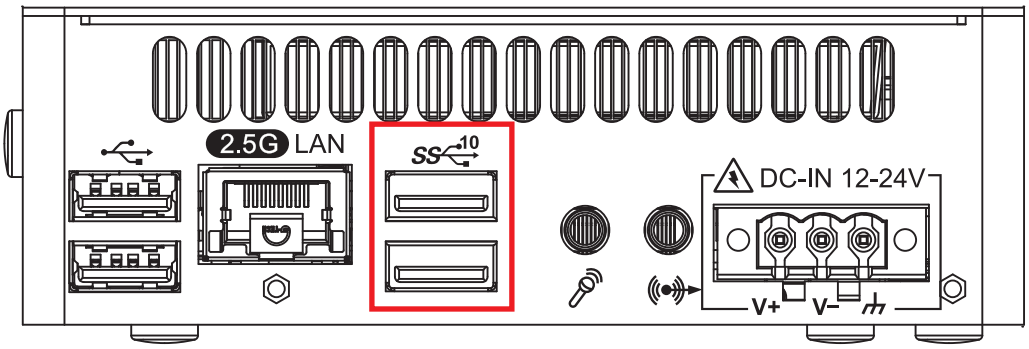

There are 2 USB 3.2 Gen2 ports connection available supporting up to 10GB per second data rate in the front side of TGS-1000/1500. It also compliant with the requirements of Super Speed (SS), high speed (HS), full speed (FS) and low speed (LS).

2.3.1.4 10/100/1000/2500 Mbps Ethernet Port

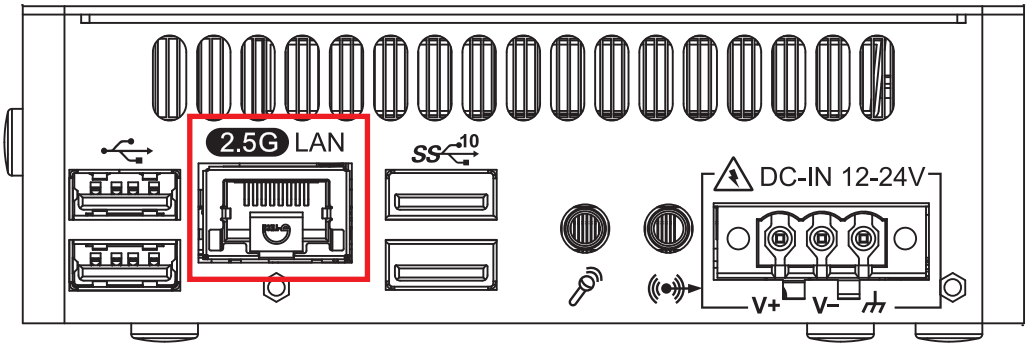

There is one 8-pin RJ-45 jacks supporting 10/100/1000/2500 Mbps Ethernet connections in the Rear side. LAN is powered by Intel i226-IT Ethernet engine. When both of LANs work in normal status, iAMT function is enabled. Using suitable RJ-45 cable, you can connect the system to a computer, or to any other devices with Ethernet connection, for example, a hub or a switch. Moreover, both of LANs support Wake on LAN and Pre-boot functions.

Connetor	LAN Chip	Function
LAN1	Intel I226	RJ45(10/100/1000/2500Mbps)

Using suitable RJ-45 cable, you can connect TGS-1000/1500 system to a computer or to any other devices with Ethernet connection, for example, a hub or a switch. Moreover, LAN1 support Wake on LAN and Pre-boot functions. The pinouts of LAN1 is listed as follow :

Pin No.	10/100MBps	1000MBps	2500MBps
1	E_TX+	MDI0_P	MDI0_P
2	E_TX-	MDI0_N	MDI0_N
3	E_RX+	MDI1_P	MDI1_P
4	----------	MDI2_P	MDI2_P
5	----------	MDI2_N	MDI2_N
6	E_RX-	MDI1_N	MDI1_N
7	----------	MDI3_P	MDI3_P
8	----------	MDI3_N	MDI3_N

Each LAN port is supported by standard RJ-45 connector with LED indicators to present Active/Link/Speed status of the connection. The LED indicator on the left bottom corner lightens in solid green when the cable is properly connected to a 100 Mbps Ethernet network, and it lightens in solid orange when the cable is properly connected to a 1000 Mbps Ethernet network. The right LED will keep twinkling/off when Ethernet data packets are being transmitted or received.

LED Location	LED Color	10 Mbps	100 Mbps	1000 Mbps	2500 Mbps
Right	Green/ Orange	Off	Off	Solid Green	Solid Orange
Left	Yellow	Twinkling Yellow	Twinkling Yellow	Twinkling Yellow	Twinkling Yellow

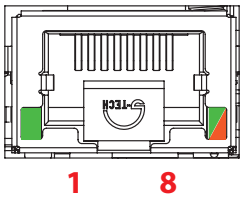

2.3.1.5 Audio Jack

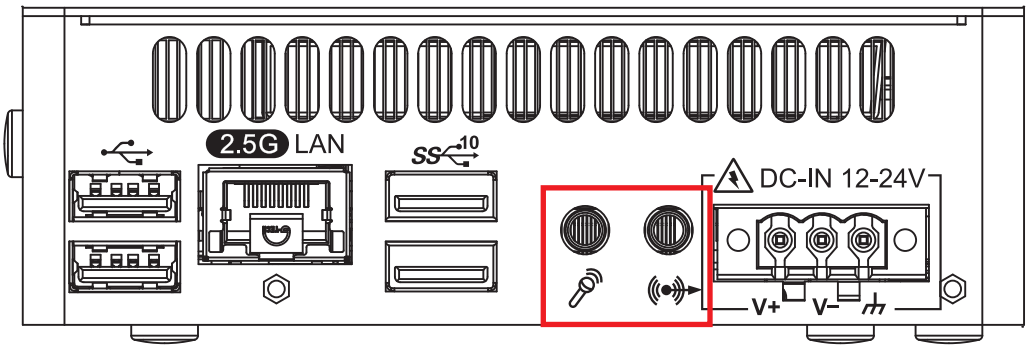

There are 2 audio connectors, Mic-in and Line-out, in the Rear side of TGS-1000/1500. Onboard Realtek ALC888 audio codec supports 7.1 channel HD audio and fully complies with Intel® High Definition Audio (Azalia) specifications. To utilize the audio function in Windows platform, you need to install corresponding drivers for Realtek ALC888 codec.

2.4 Main Board Expansion Connectors

2.4.1 TGS-1000/1500 Main Board Top Side View

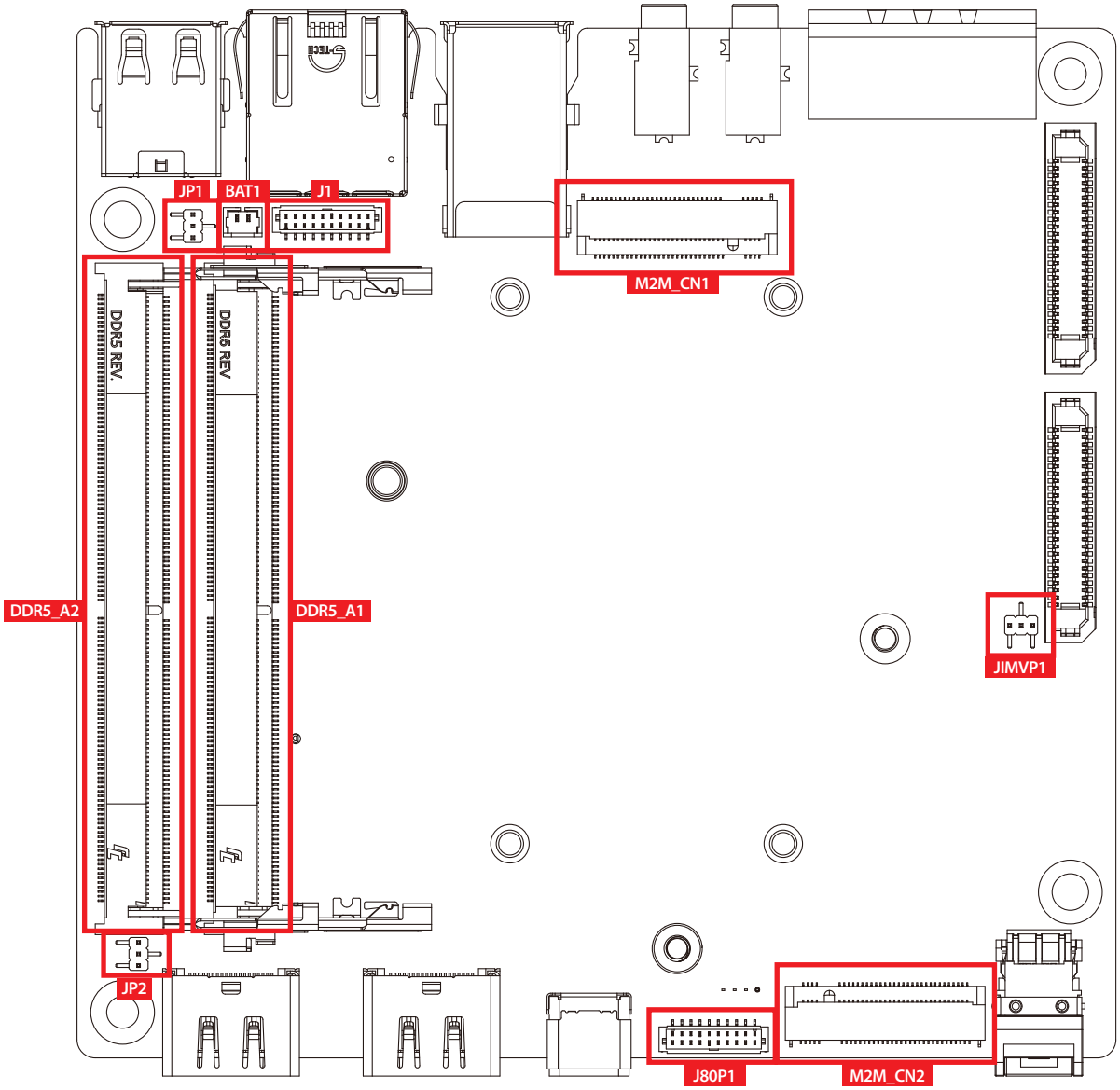

TGS-1000/1500 Main Board Bottom Side View

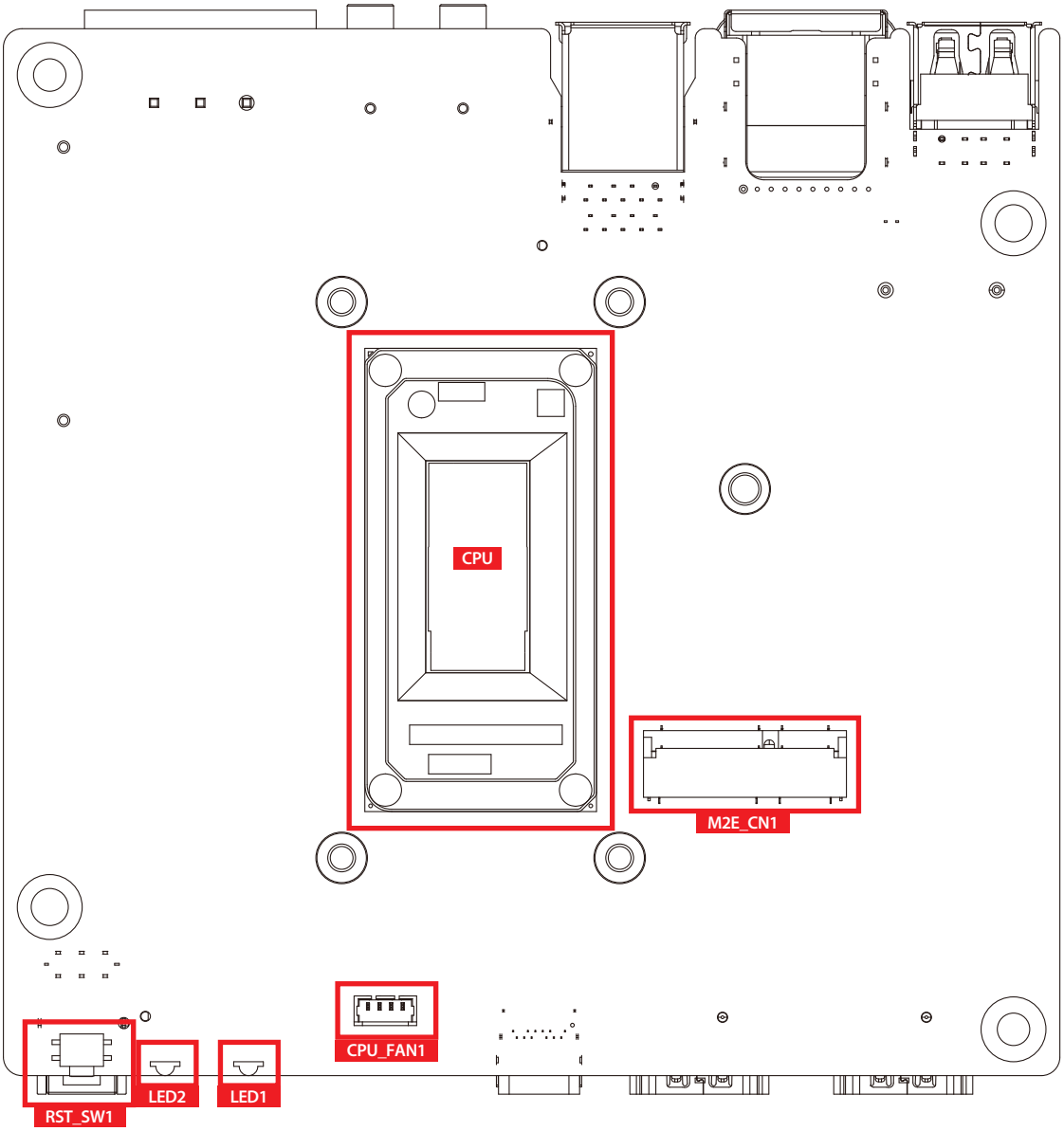

2.4.2 J1 : Uart Pin Header

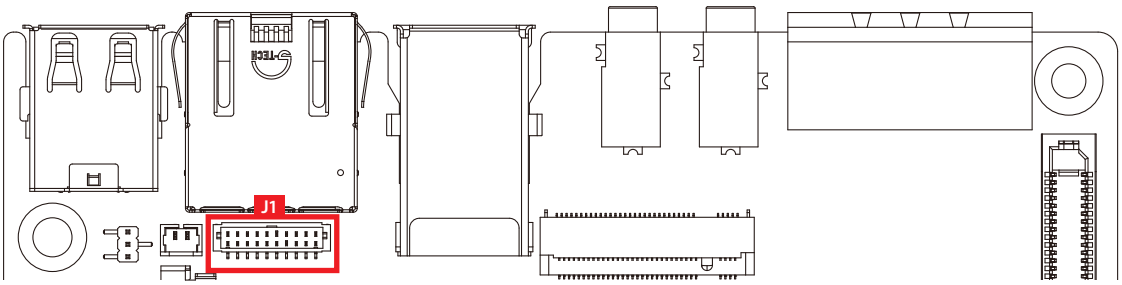

PIN NO.	Function	Layout
1	+V3.3S	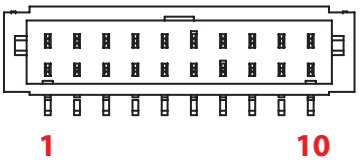
2	+V3.3S	
3	+V3.3S	
4	COM2_TXD	
5	GND	
6	COM2_RXD	
7	GND	
8	COM1_TXD	
9	GND	
10	COM1_RXD	

2.4.3 BAT1 : RTC Battery

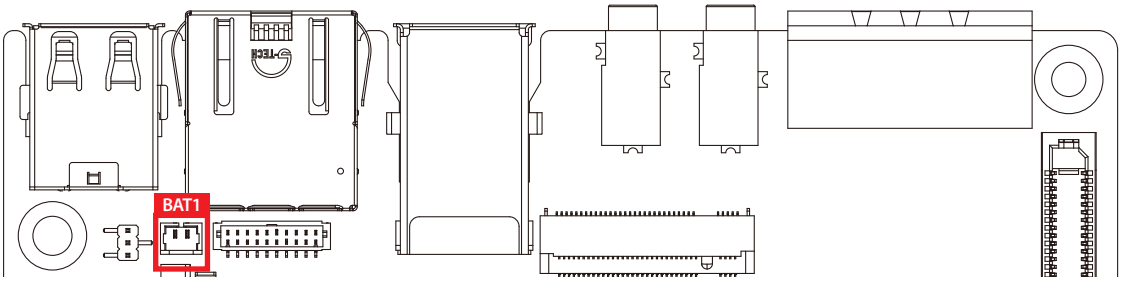

The TGS-1000/1500's real-time clock is powered by a lithium battery. It is equipped with Panasonic BR2032 190mAh lithium battery. It is recommended that you not replace the lithium battery on your own, but if the battery needs to be changed, please contact the Vecow RMA service team.

Pin No.	Definition	Layout
1	+3V_BAT	
2	GND	

2.4.4 M2M_CN1,M2M_CN2 : M.2 key M Slot for PCIe Gen4x4 support

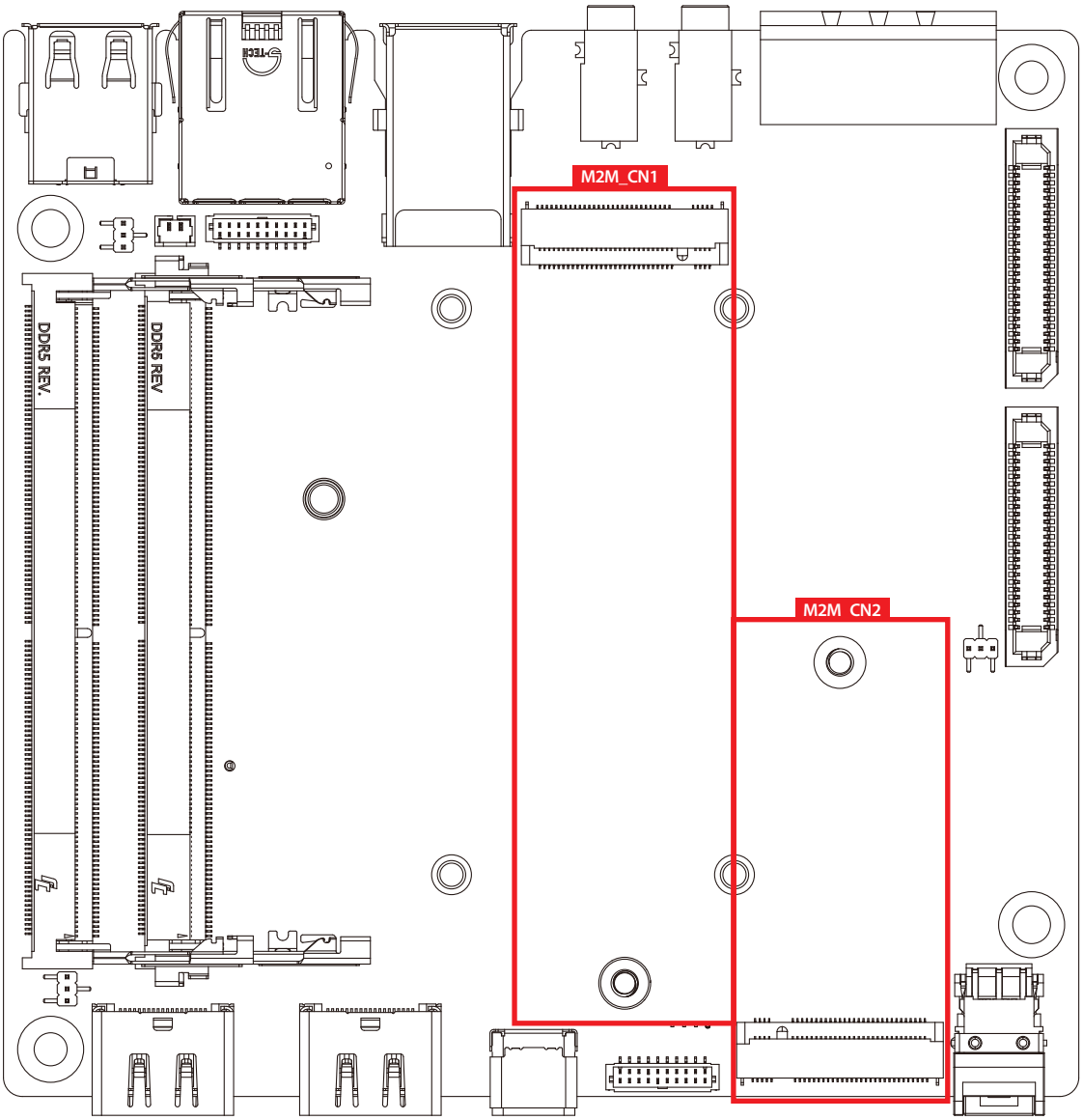

M.2 key M connector is suitable for applications that use Host I/Fs supported by either PCIe Module card types include 2242/2280 (Only Support PCIEx4).

PIN NO.	Signal Name	Pin No.	Signal Name
75	Ground		
73	Ground	74	3.3V
71	Ground	72	3.3V
69	PEDET	70	3.3V
67	Ground	68	NC
Mechanical Key			
57	Ground	58	NC
55	REFCLKp	56	NC

PIN NO.	Signal Name	Pin No.	Signal Name
53	REFCLKn	54	PEWAKE#
51	Ground	52	CLKREQ#
49	PETp0/SATA_A+	50	PERST#
47	PETn0/SATA_A-	48	NC
45	Ground	46	NC
43	PERp0/SATA_B-	44	NC
41	PERn0/SATA_B+	42	NC
39	Ground	40	NC
37	PETp1	38	DEVSLP
35	PETn1	36	NC
33	Ground	34	NC
31	PERp1	32	NC
29	PERn1	30	NC
27	Ground	28	NC
25	PETp2	26	NC
23	PETn2	24	NC
21	Ground	22	NC
19	PERp2	20	NC
17	PERn2	18	3.3V
15	Ground	16	3.3V
13	PETp3	14	3.3V
11	PETn3	12	3.3V
9	Ground	10	LED1#
7	PERp3	8	NC
5	PERn3	6	NC
3	Ground	4	3.3V
1	Ground	2	3.3V

2.4.5 M2E_CN1 : M.2 key E Slot for USB2.0, PCIe Gen4x1 support

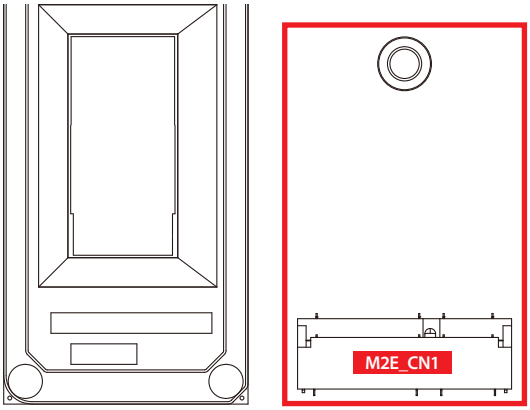

M.2 key E connector is suitable for applications that use wireless connectivity including Wi-Fi, Bluetooth, NFC of GNSS. Module card types include 2230.

The pin assignments of M2E_CN1 are listed in the following table :

PIN NO.	Signal Name	Pin No.	Signal Name
75	Ground		
73	NC	74	3.3V
71	NC	72	3.3V
69	Ground	70	PEWAKE1#
67	NC	68	NC
65	NC	66	NC
63	Ground	64	NC
61	NC	62	ALERT
59	NC	60	I2C_CLK
57	Ground	58	I2C_DATA
55	PEWAKE0#	56	NC
53	CLKREQ0#	54	NC
51	Ground	52	PERST0#
49	REFCLKn0	50	NC
47	REFCLKp0	48	NC
45	Ground	46	NC
43	PERn0	44	NC
41	PERp0	42	NC
39	Ground	40	NC
37	PETn0	38	DEVSLP
35	PETp0	36	NC
33	Ground	34	NC
		32	NC
Mechanical Key			
23	NC		
21	NC	22	NC
19	Ground	20	NC
17	NC	18	Ground
15	NC	16	NC
13	Ground	14	NC
11	NC	12	NC
9	NC	10	NC
7	Ground	8	NC
5	USB-	6	LED1#
3	USB+	4	3.3V
1	Ground	2	3.3V

2.4.6 JIMVP1 : VCORE FW Programming Header

PIN NO.	Definition	Layout
1	SMB_CLK	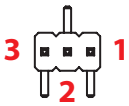
2	SMB_DATA	
3	GND	

2.4.7 CPU_FAN1: CPU FAN Connector

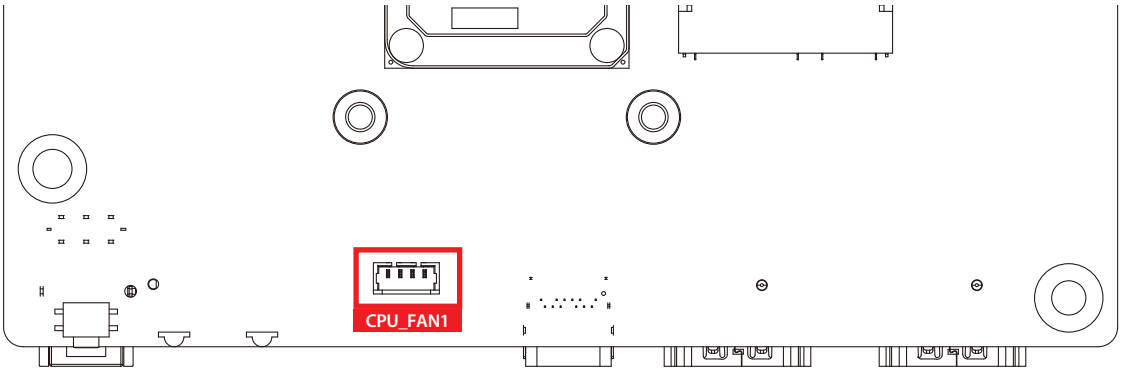

Fan power connector supports higher thermal requirements.

PIN NO.	Definition	PIN NO.	Definition	Layout
1	GND	2	+12V (1.5A max)	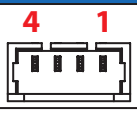
3	Fan speed sensor	4	Fan PWM	

2.4.8 J80P : ESPI Port 80 Header

The system's provide a ESPI Port 80 Header for Debug Card.

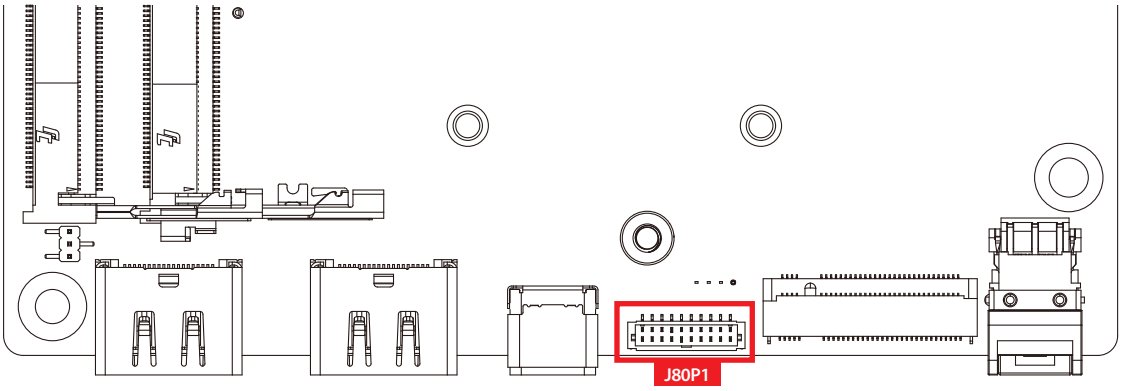

PIN NO.	Definition	Layout
1	+V3.3S	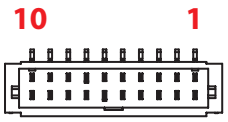
2	Port 80_ESPI_CS#	
3	Port 80_ESPI_IO0	
4	Port 80_ESPI_IO1	
5	Port 80_ESPI_IO2	
6	Port 80_ESPI_IO3	
7	GND	
8	Port 80_ESPI_CLK	
9	RST 80_ESPI_RST#	
10	GND	

2.5 Main Board Jumper Settings

2.5.1 Front View of TGS-1000/1500 Main Board with Jumper Location

The figure below is the top view of the TGS-1000/1500 main board. It shows the location of the jumpers.

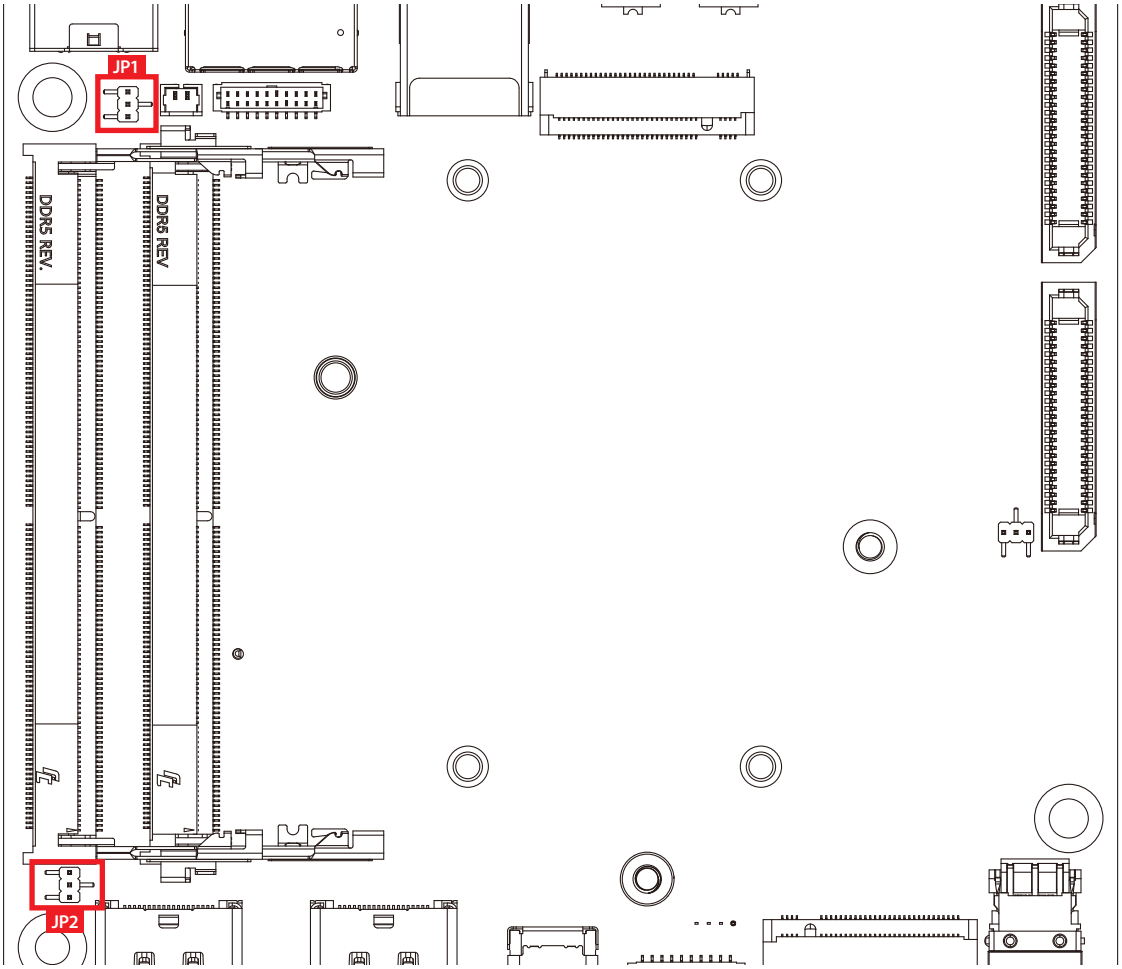

You may configure your card to match the needs of your application by setting jumpers. A jumper is a metal bridge used to close an electric circuit. It consists of two metal pins and a small metal clip (often protected by a plastic cover) that slides over the pins to connect them. To “close” a jumper, you connect the pins with the clip. To “open” a jumper, you remove the clip. Sometimes a jumper will have three pins, labeled 1, 2, and 3. In this case you would connect either pins 1 and 2, or 2 and 3.

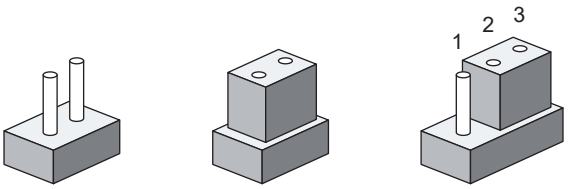

Open Closed Closed 2-3

2.5.2 Clear CMOS(JP1)

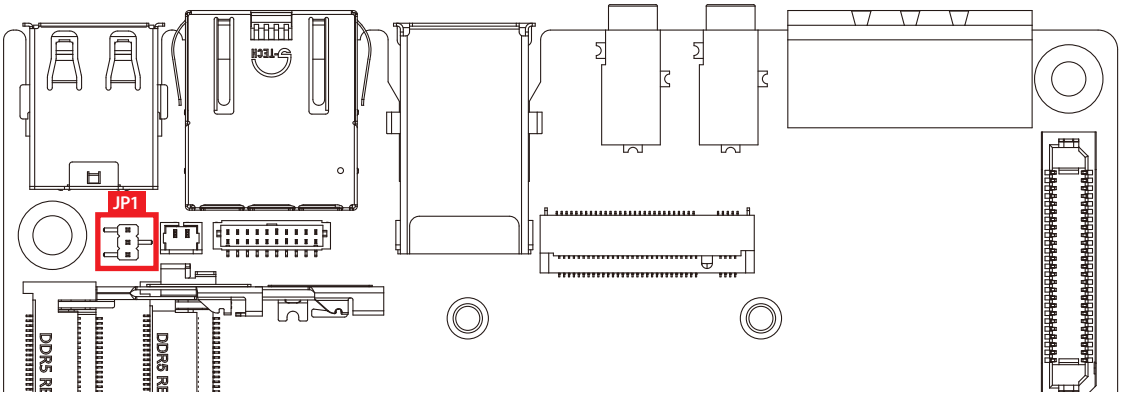

Location	Setting	Function	Layout
JP1	1-2	Normal (Default)	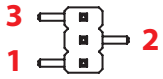
	2-3	Clear CMOS	

2.5.3 HDA_SDO1(JP2)

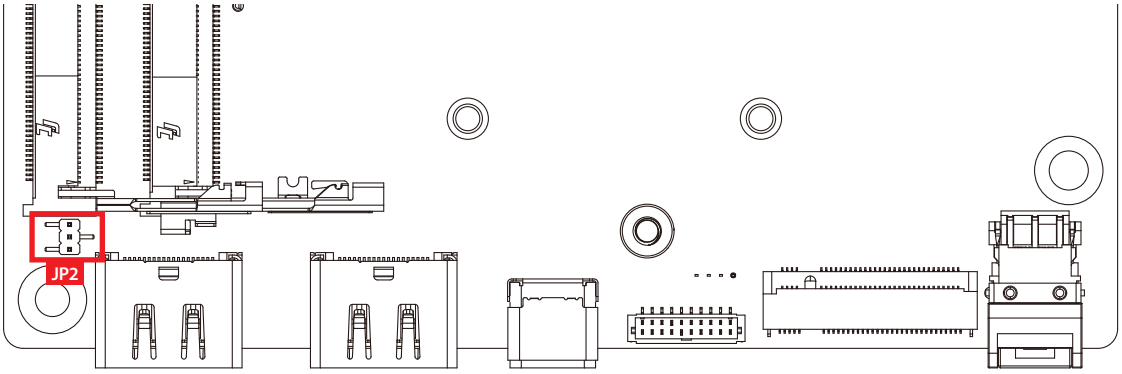

Location	Setting	Function	Layout
JP2	1-2	Enable security measures defined in the Flash Descriptor. (Default)	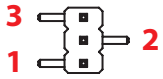
	2-3	Disable Flash Descriptor Security. (override)	

3

SYSTEM SETUP

3.1 Installing DDR5 SO-DIMM Module

Step 1 Remove four flat head M3x4L screws and bottom cover.

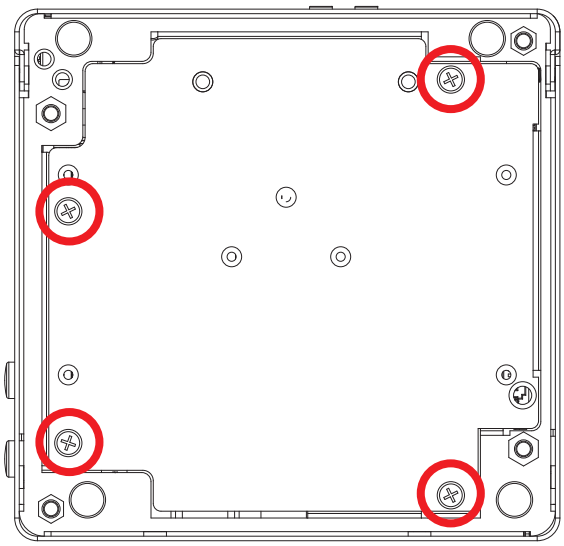

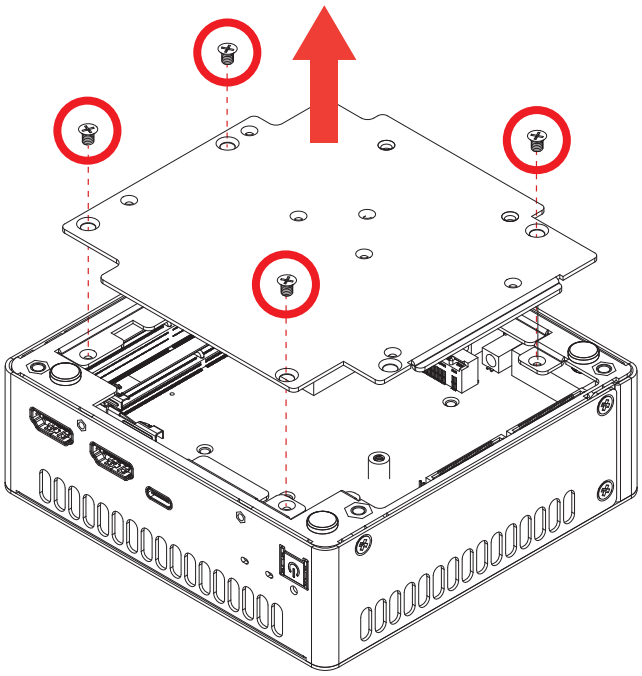

Step 2 Install DDR5 SO-DIMM.

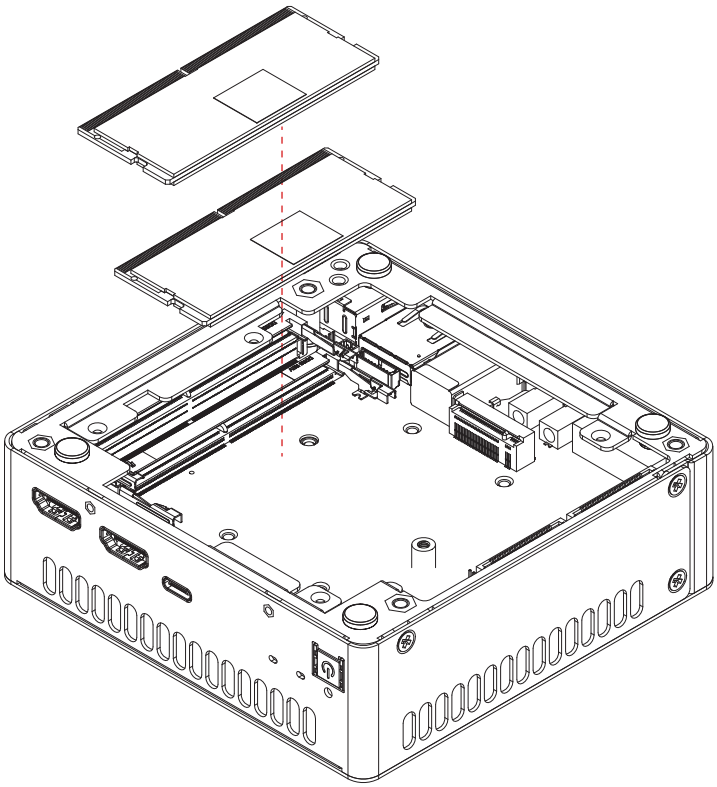

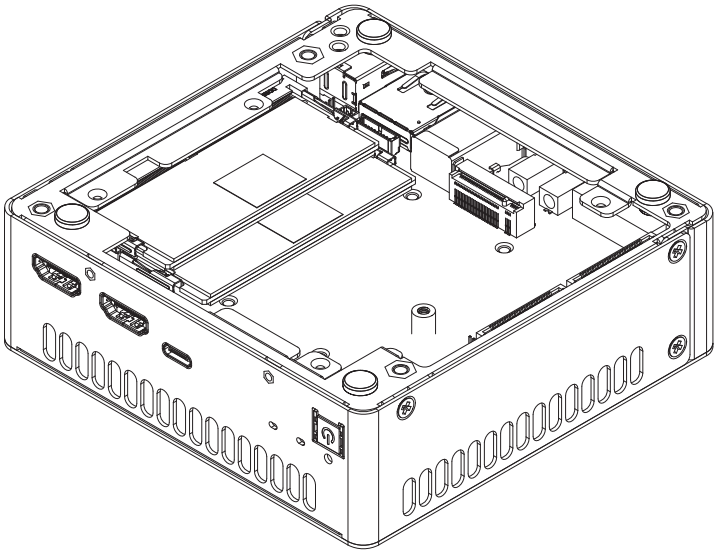

Step 3 Remove the release liner from the bottom cover.

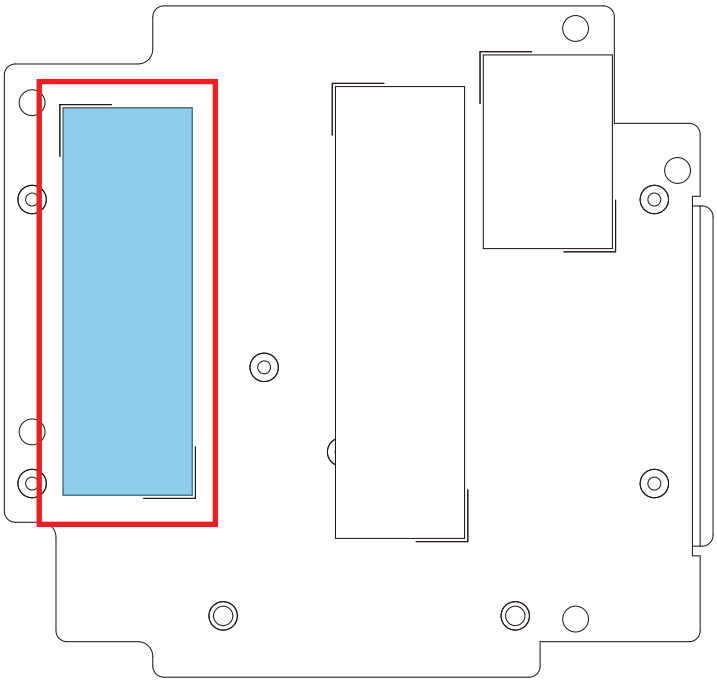

Step 4 Install four flat head M3x4L screws to lock bottom cover.

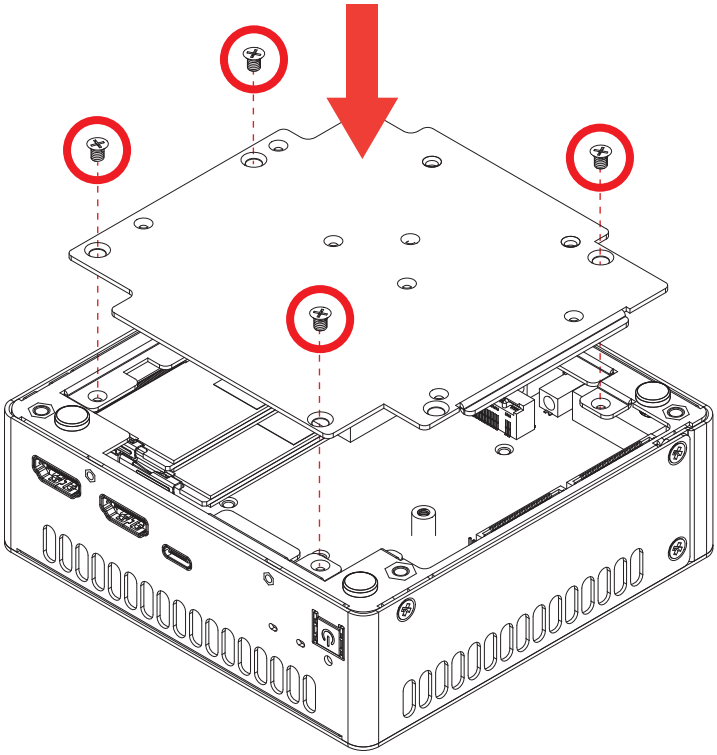

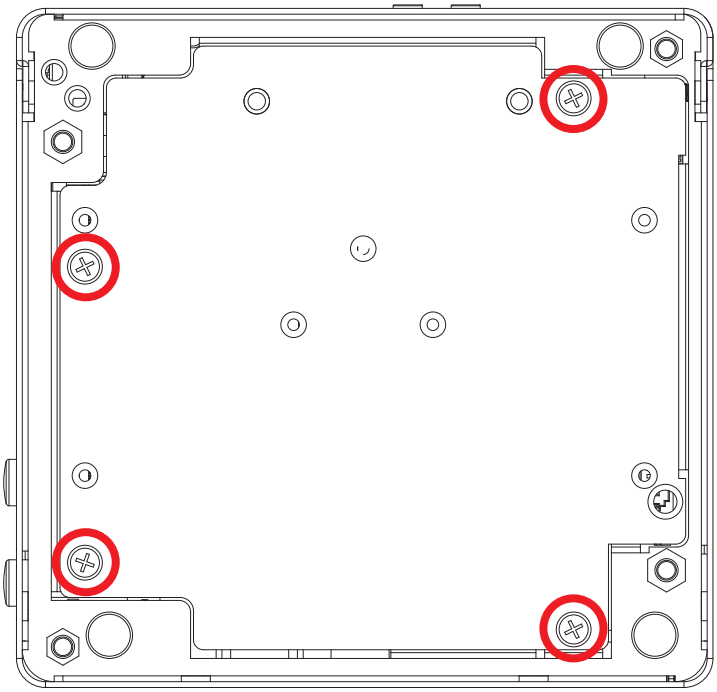

3.2 Installing M.2

3.2.1 Installing M.2 Key M 2280

Step 1 Remove four flat head M3x4L screws and bottom cover.

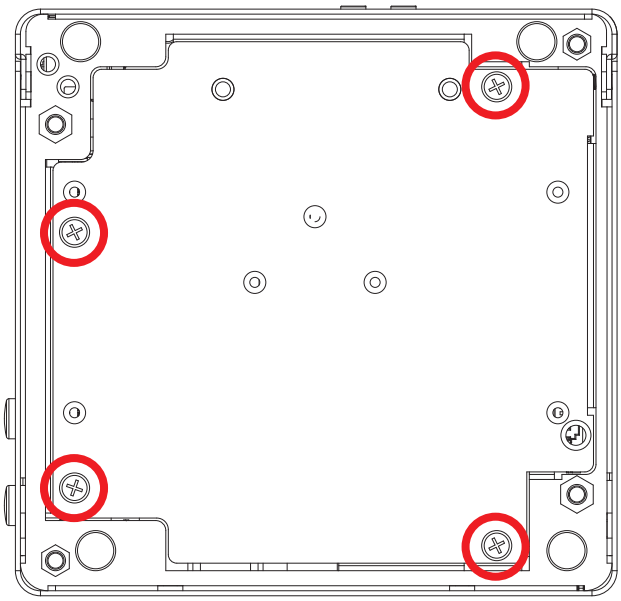

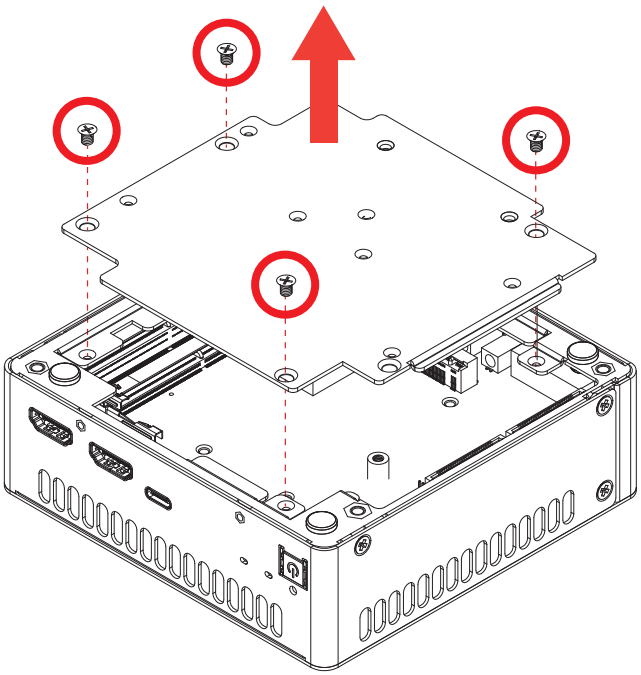

Step 2 Install thermal pad (Vecow PN: 53-4031742-203, please refer to packing list) and remove the release liners from both sides of thermal pads and adhere them to the surface of the PCBA.

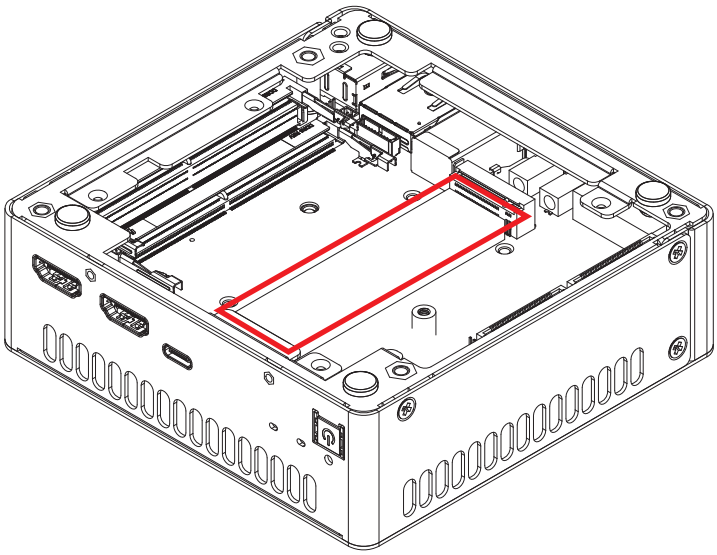

Step 3 Install M.2 module (Key M 2280) and fasten I head M3x4L screw.

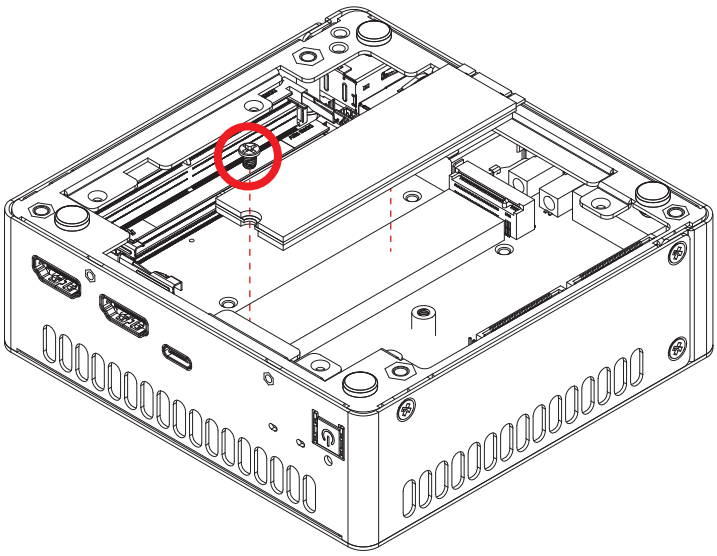

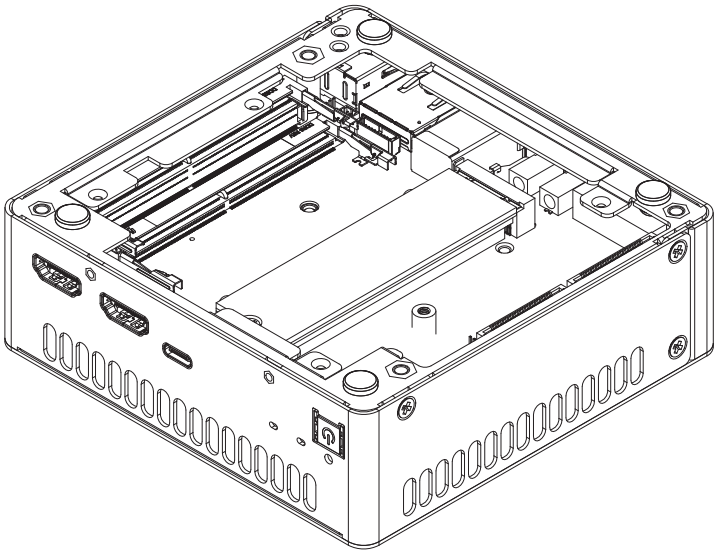

Step 4 Remove the release liner from the bottom cover.

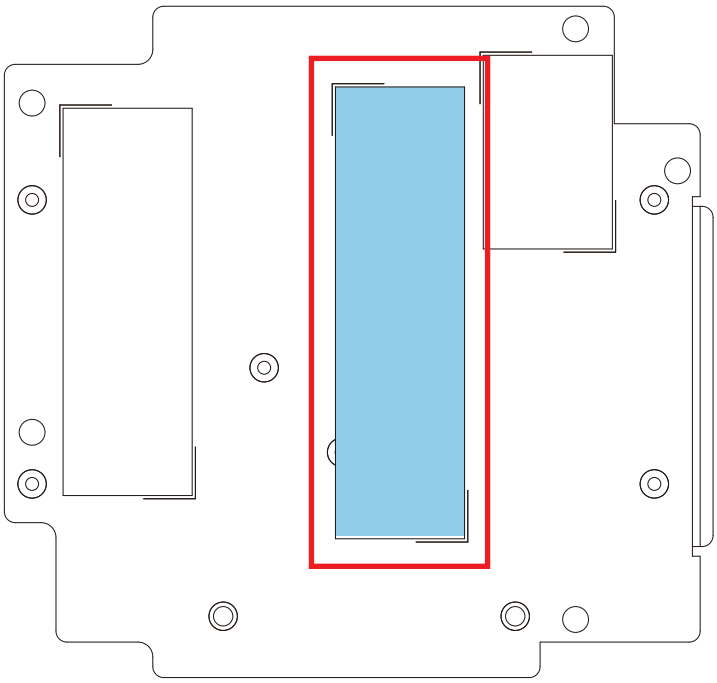

Step 5 Install four flat head M3x4L screws to lock bottom cover.

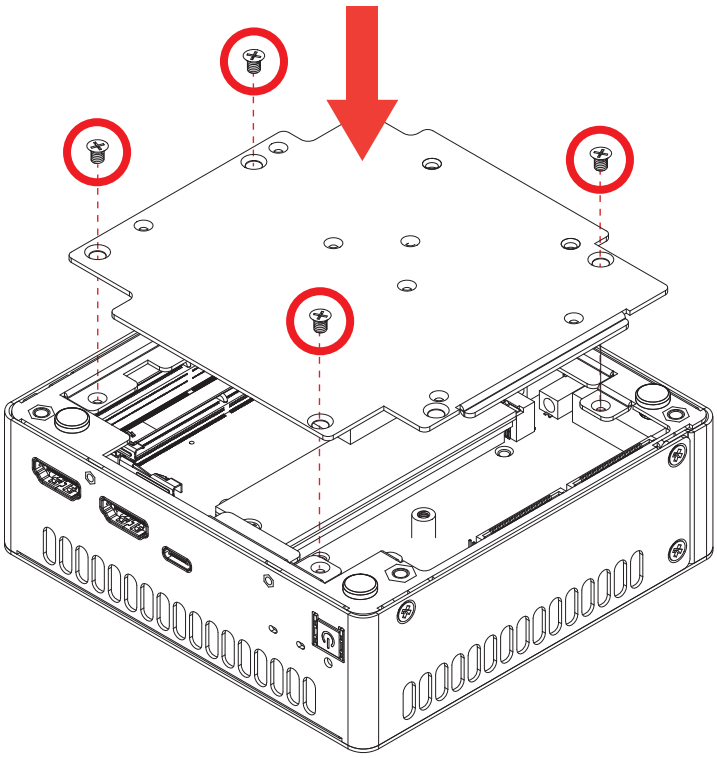

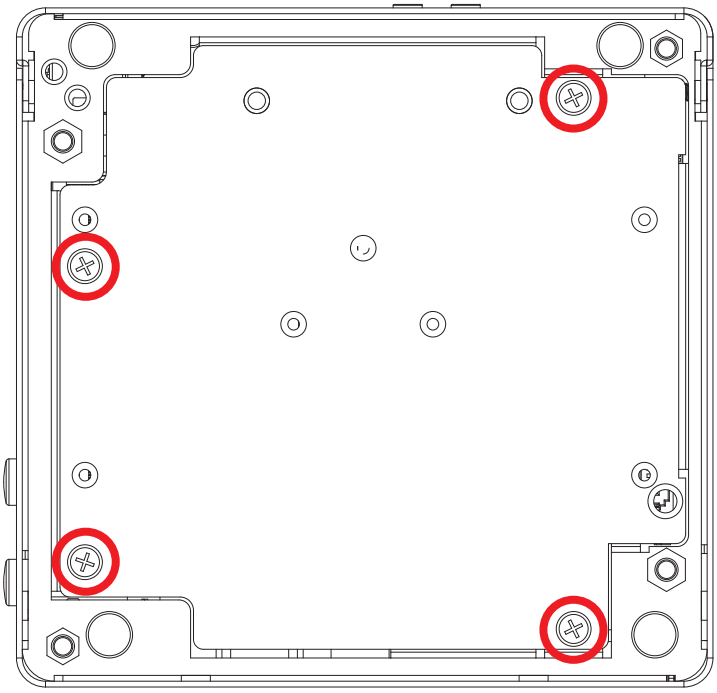

3.2.2 Installing M.2 Key M 2242

Step 1 Remove four flat head M3x4L screws and bottom cover.

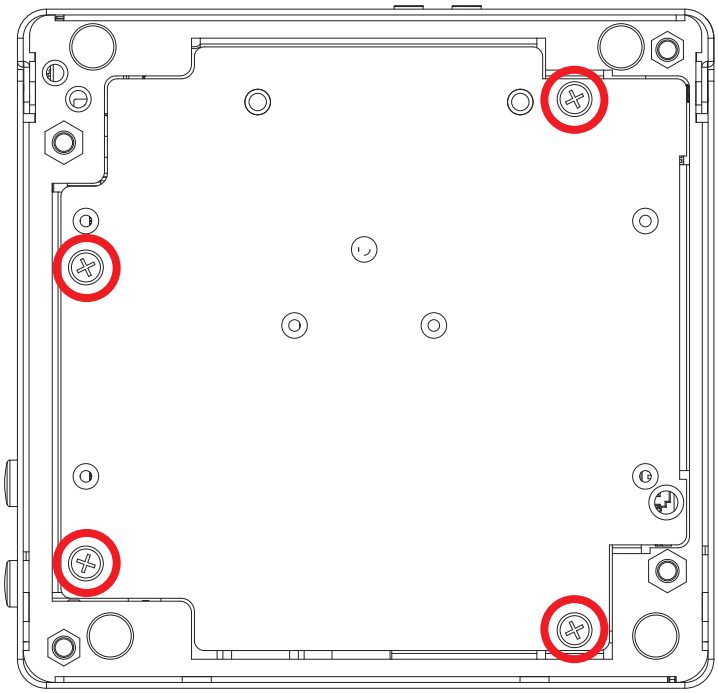

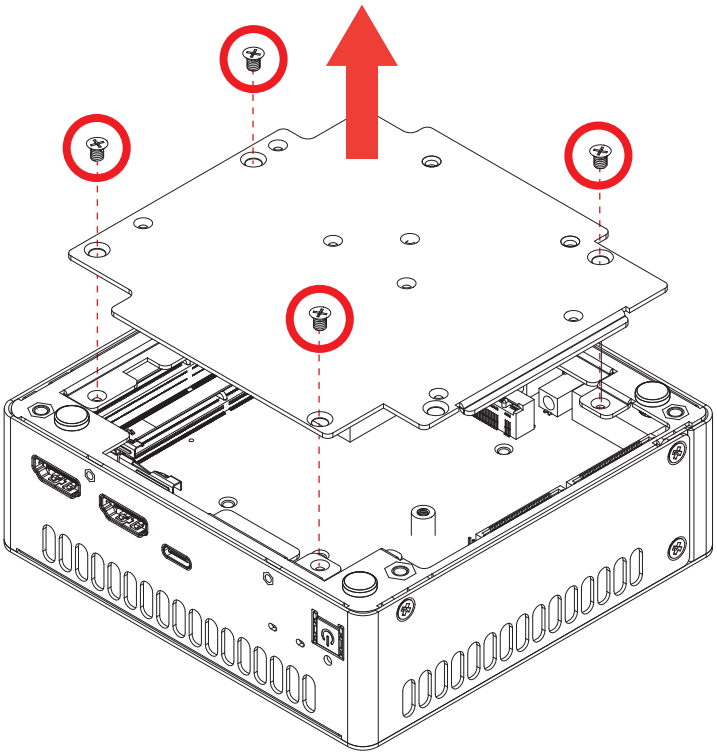

Step 2 Install thermal pad (Vecow PN: 53-4031942-203, please refer to packing list) and remove the release liners from both sides of thermal pads and adhere them to the surface of the PCBA.

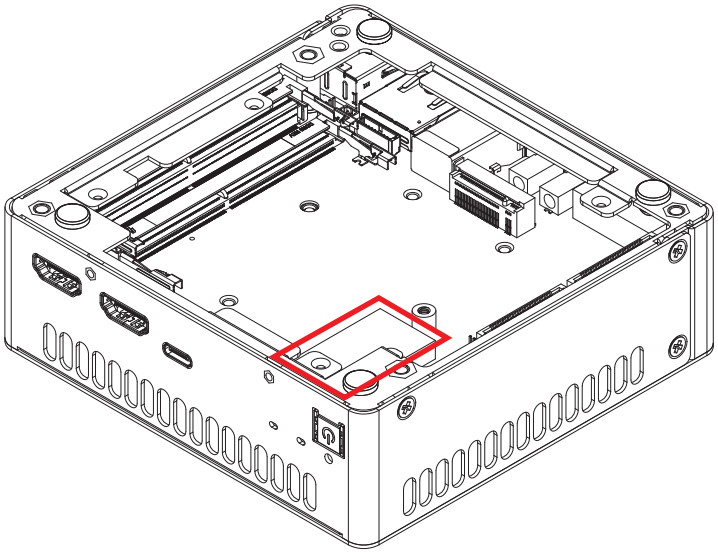

Step 3 Install M.2 module (Key M 2242) and fasten I head.

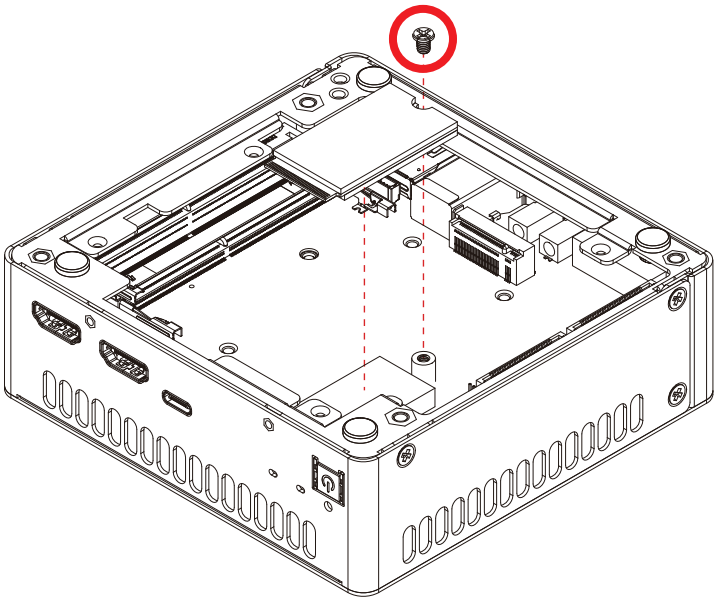

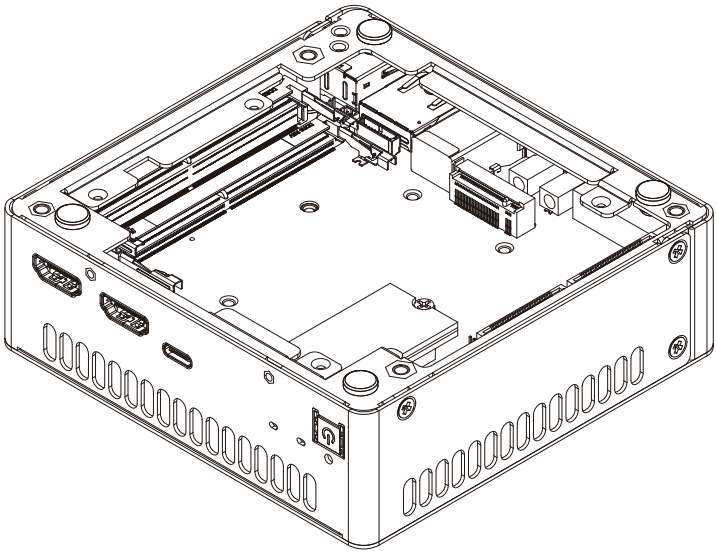

Step 4 Remove the release liner from the bottom cover.

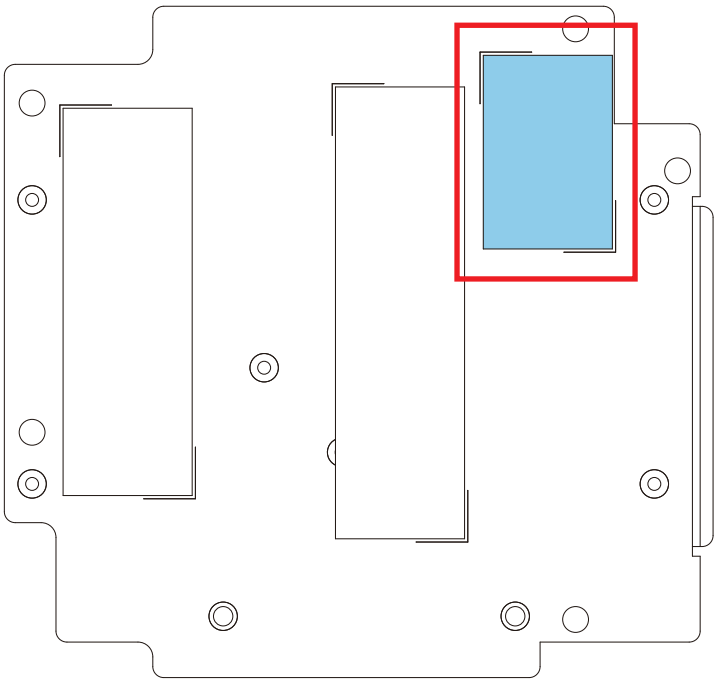

Step 5 Install four flat head M3x4L screws to lock bottom cover.

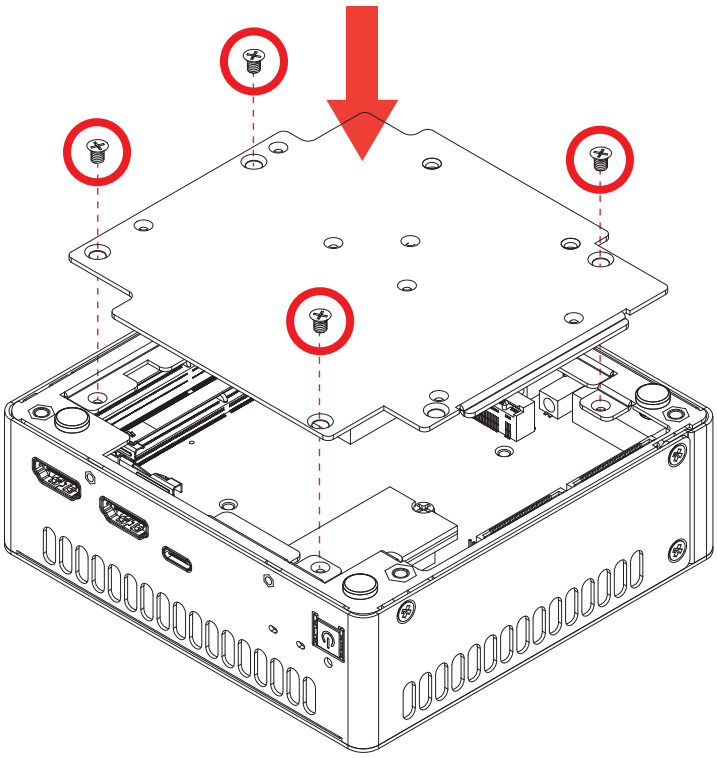

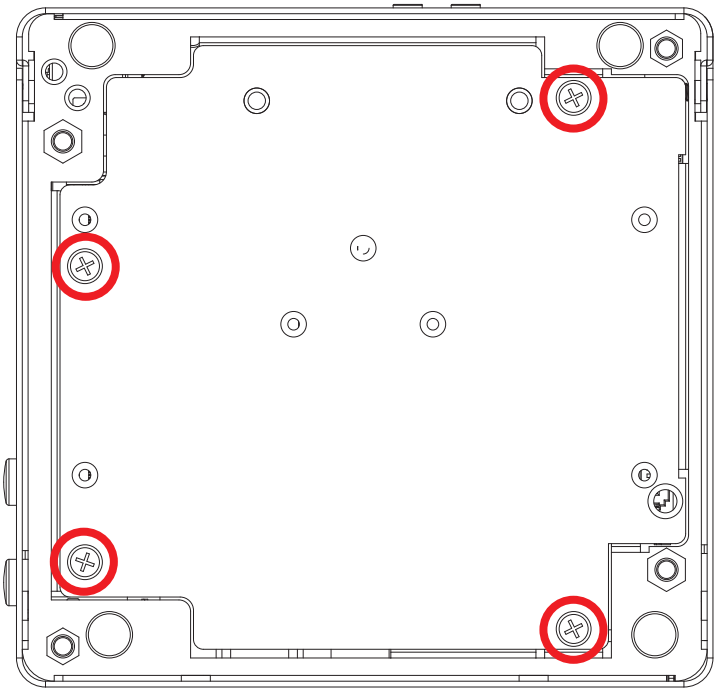

3.2.3 Installing M.2 Key E 2230

Step 1 Remove four flat head M3x4L screws and top cover.

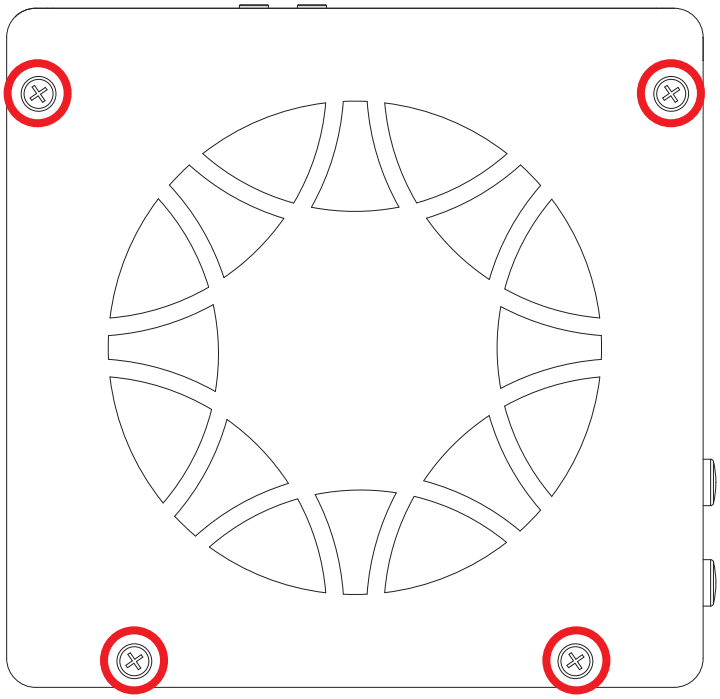

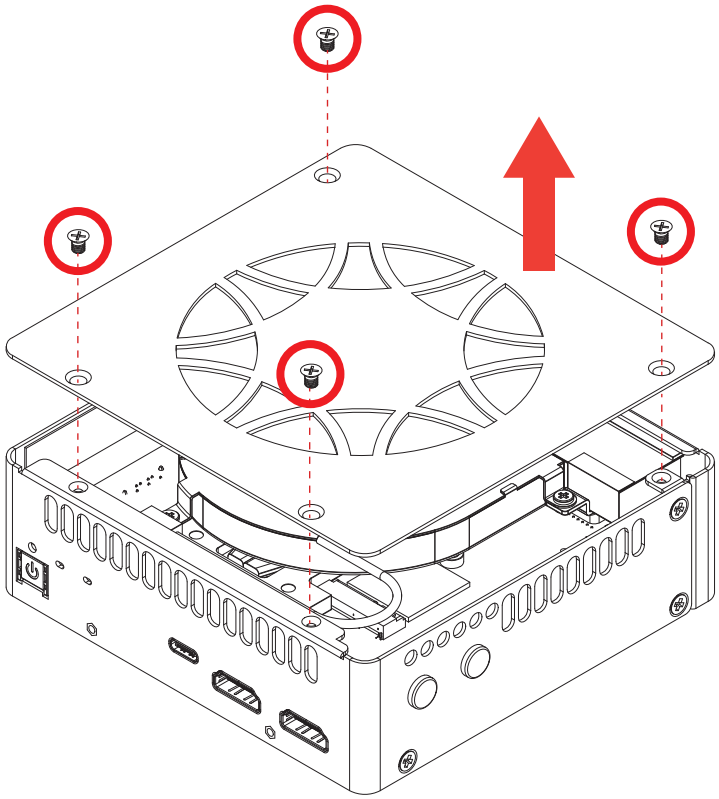

Step 2 Remove three I head M2.5x3L screws and fan connector, then take out the fan.

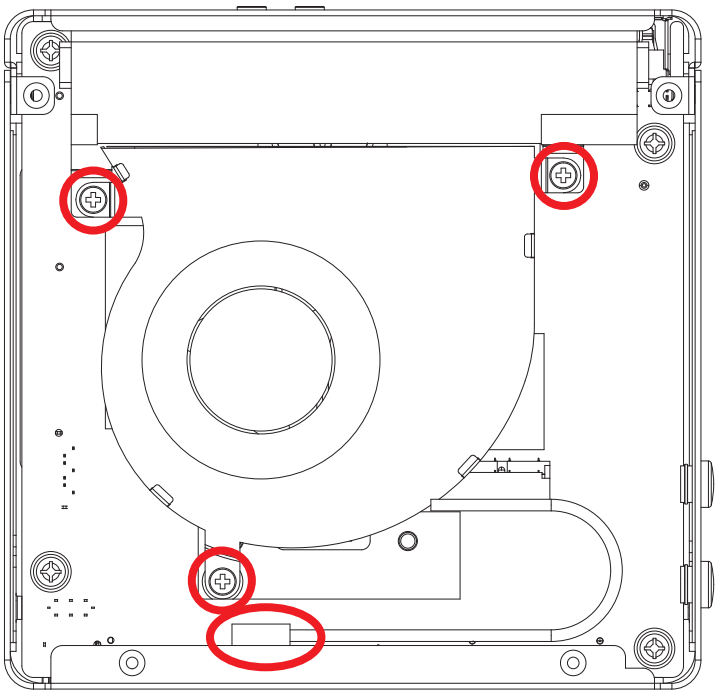

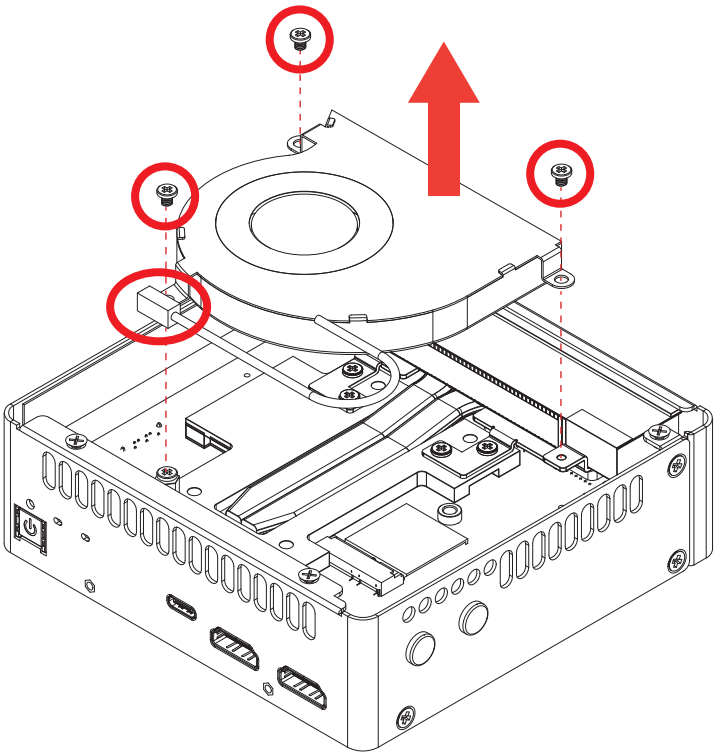

Step 3 Remove release liner.

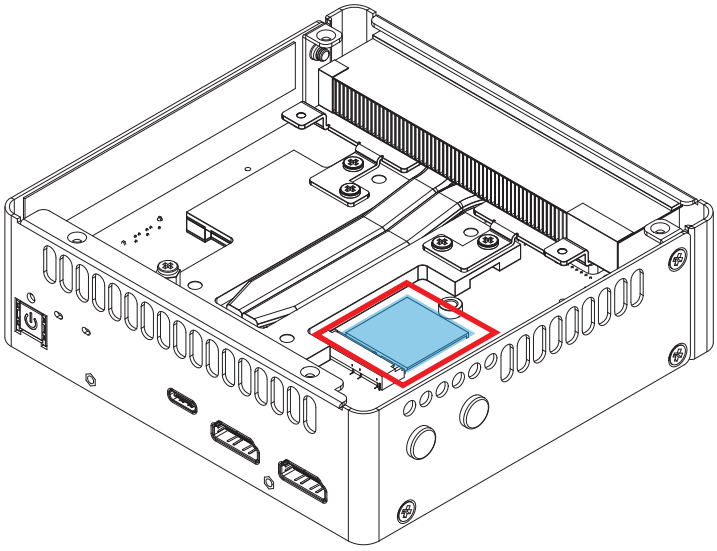

Step 4 Install M.2 module (Key E 2230) and fasten I head M3x4L screw.

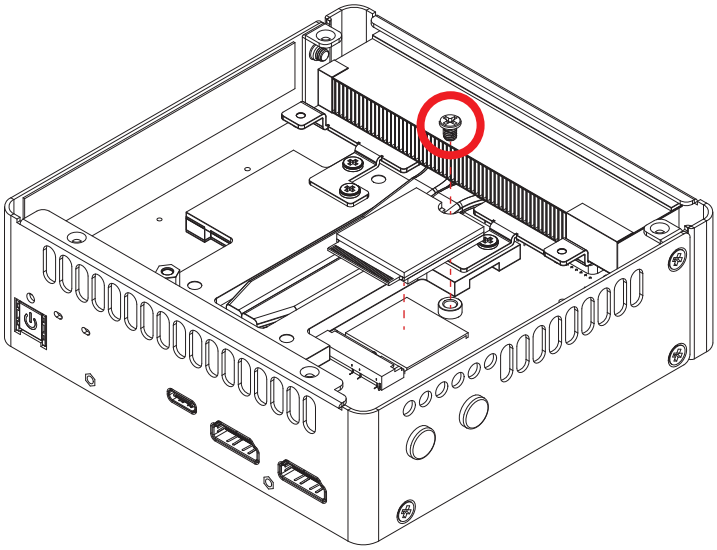

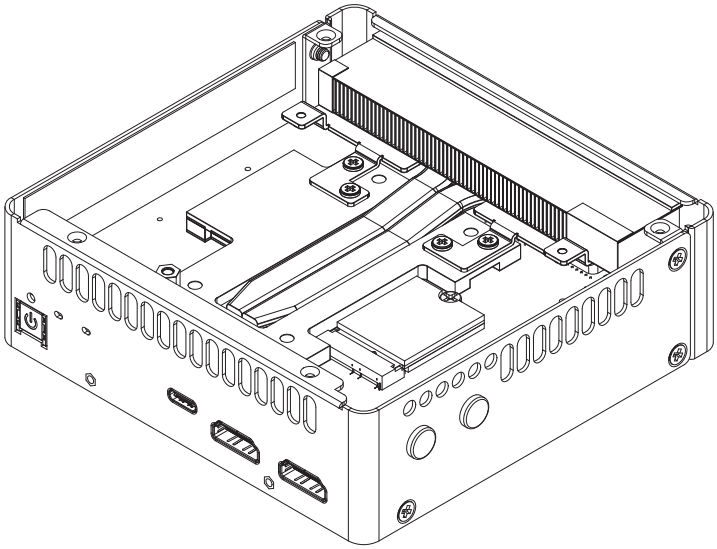

Step 5 Install the three I head M2.5x3L screws and the fan connector onto the heatsink.

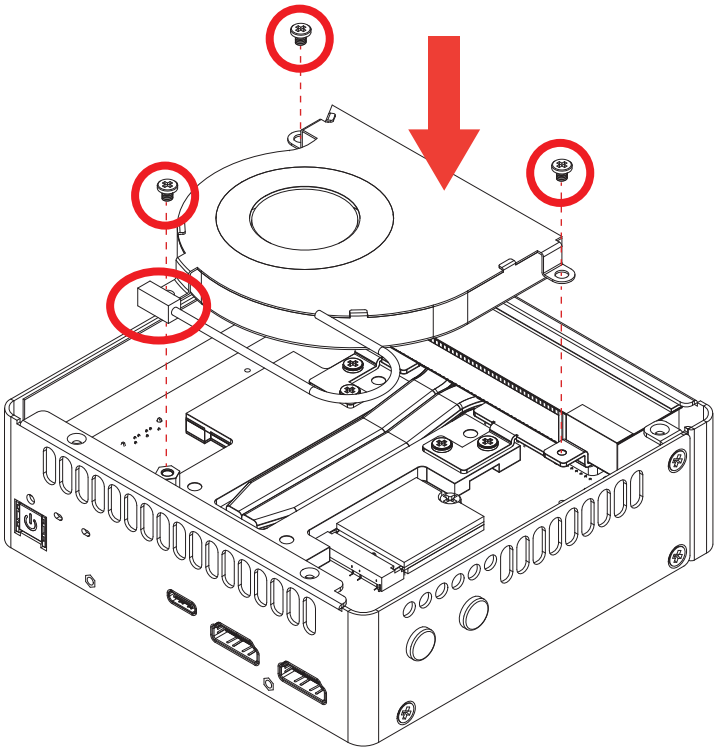

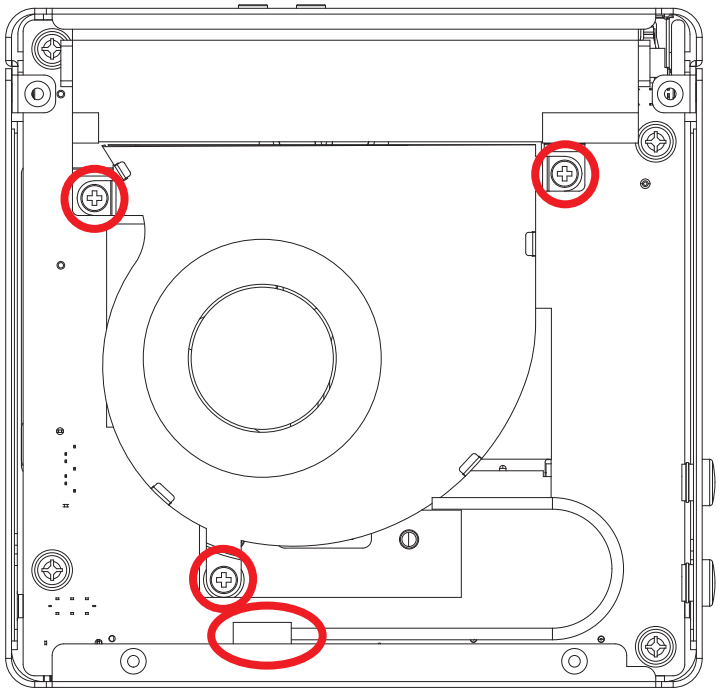

Step 6 Install four flat head M3x4L screws and top cover.

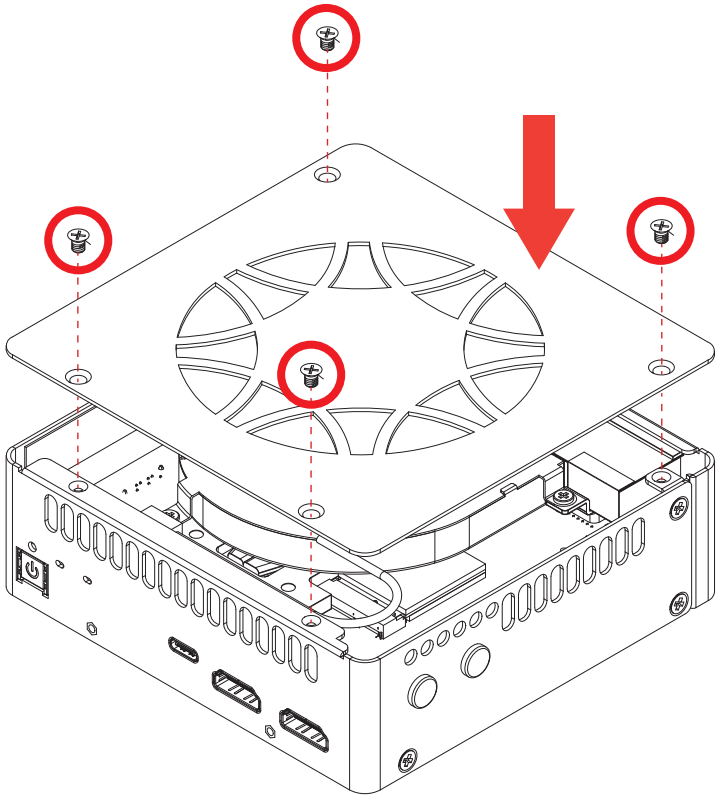

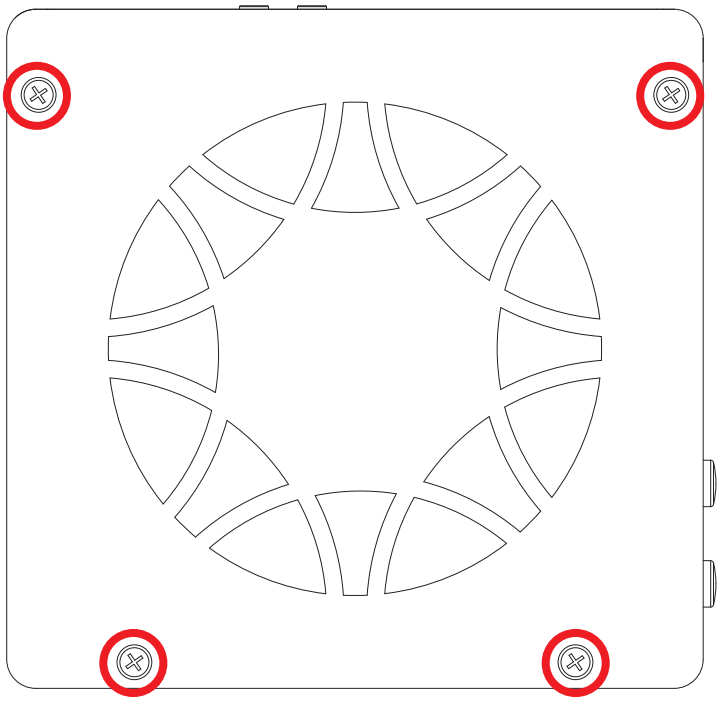

3.3 Installing Antenna Cable

Step 1 Refer to steps 1 through 4 for installing the M.2 Key E 2230.

Step 2 Remove hole plug.

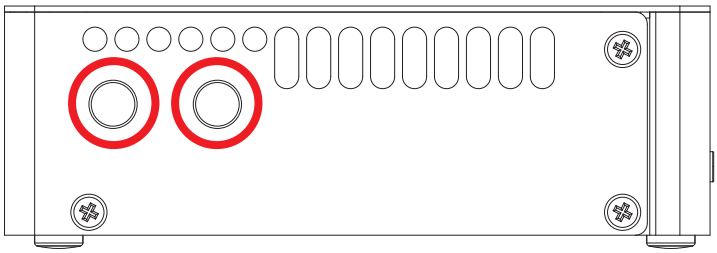

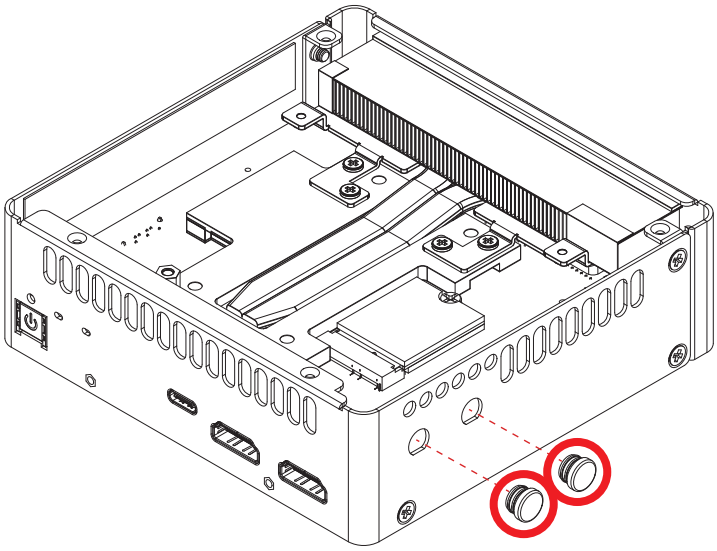

Step 3 Install SMA cable , and fasten washer and nut.

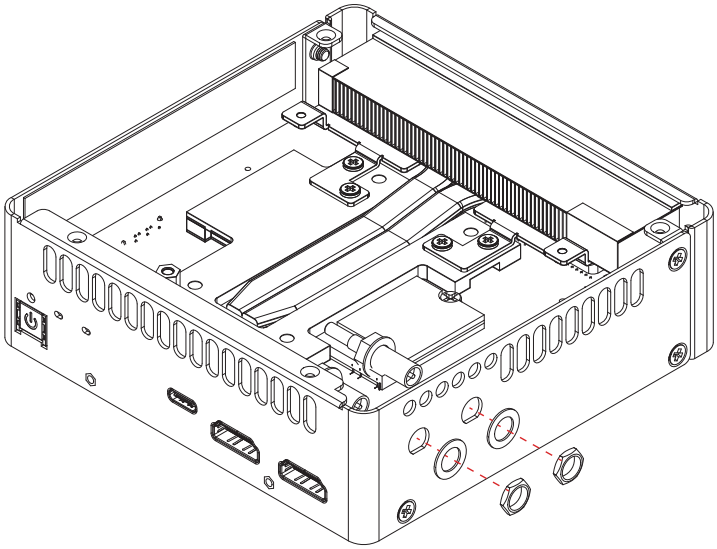

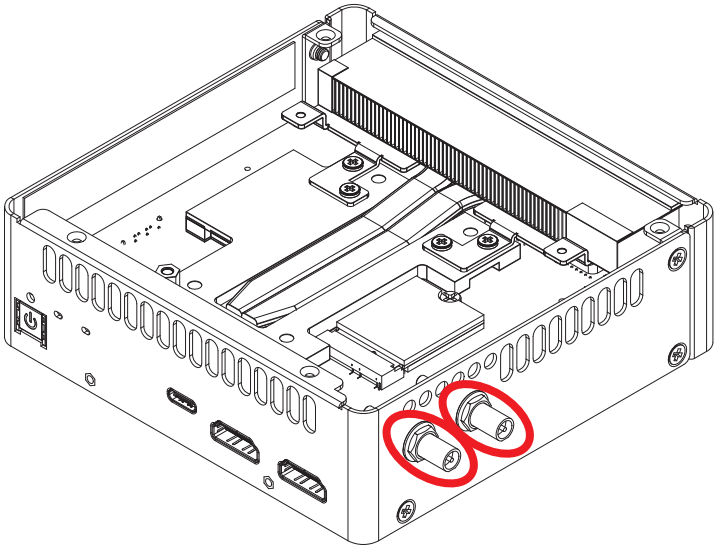

Step 4 Connect the antenna connector to the M.2 Key E.

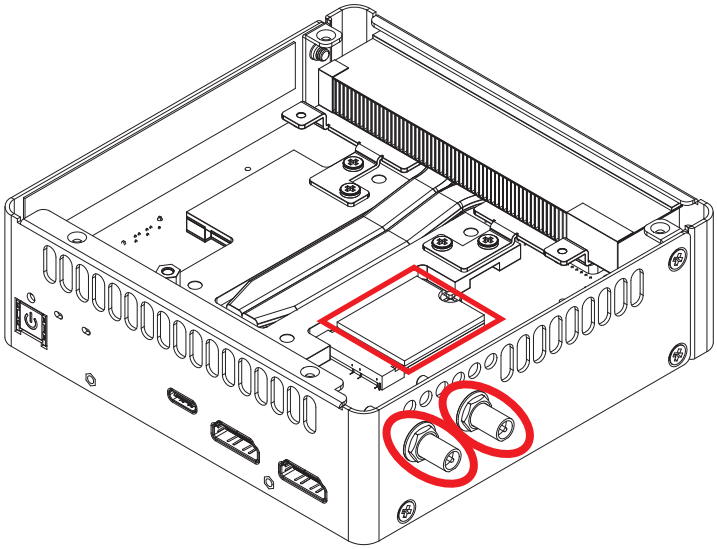

Step 5 Install the three I head M2.5x3L screws and the fan connector onto the heatsink.

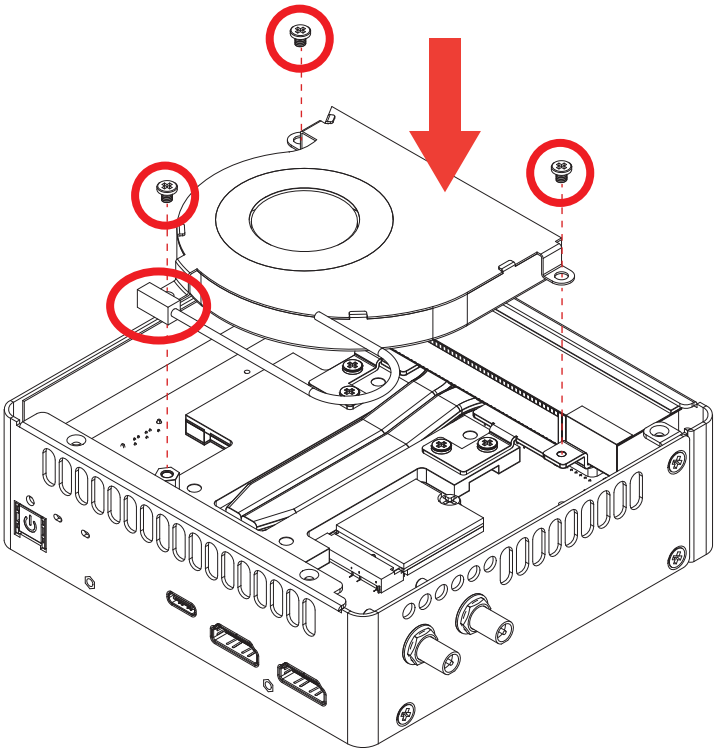

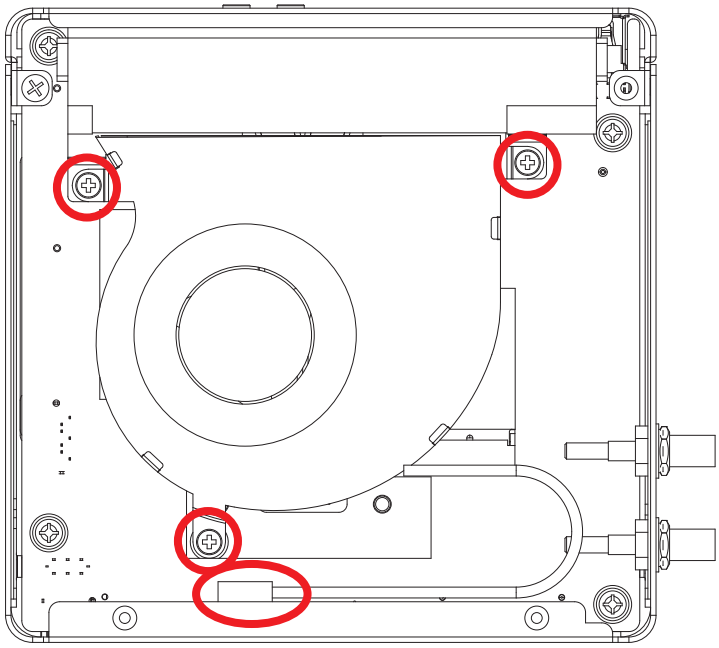

Step 6 Install four flat head M3x4L screws and top cover.

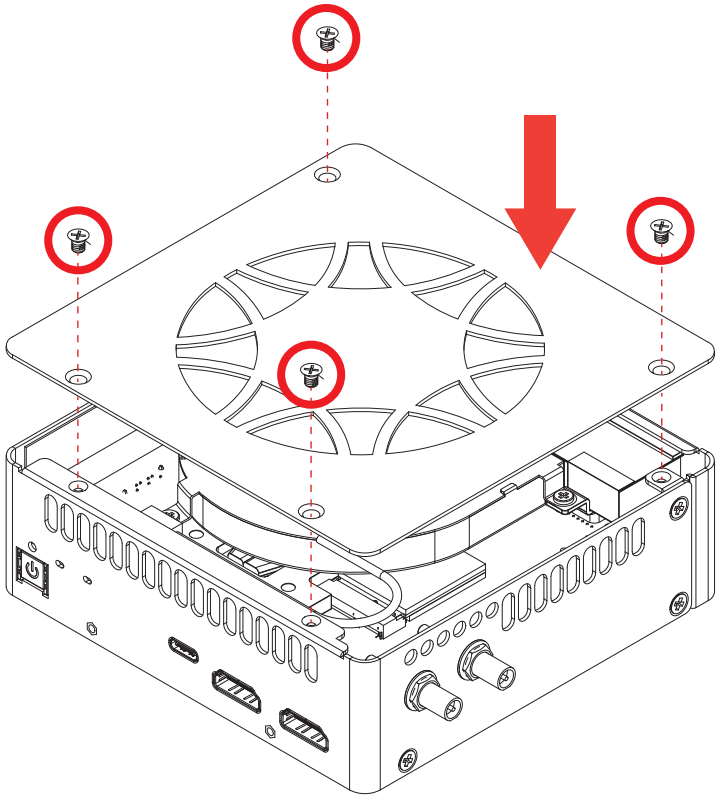

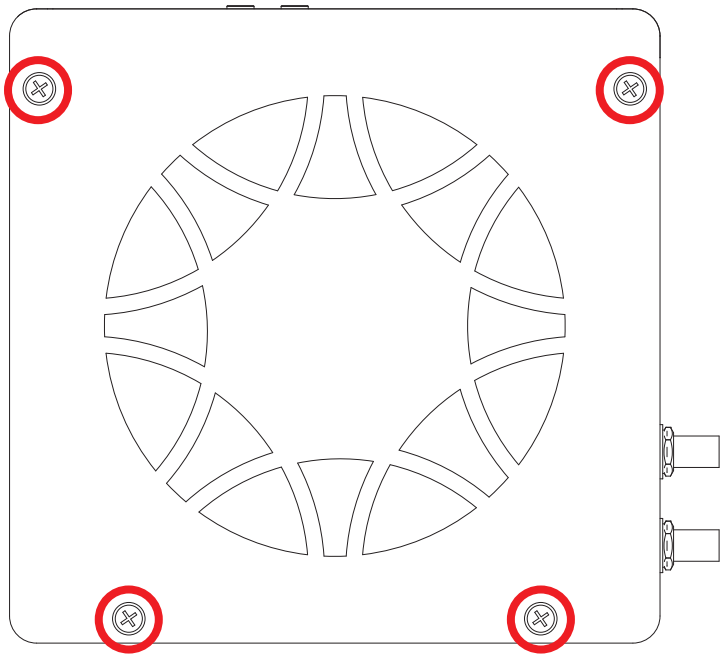

3.4 Dock Your TGS-100 Series

3.4.1 Docking TGS-100 Series

Step 1 Remove four flat head M3x4L screws and bottom cover of TGS-1000.

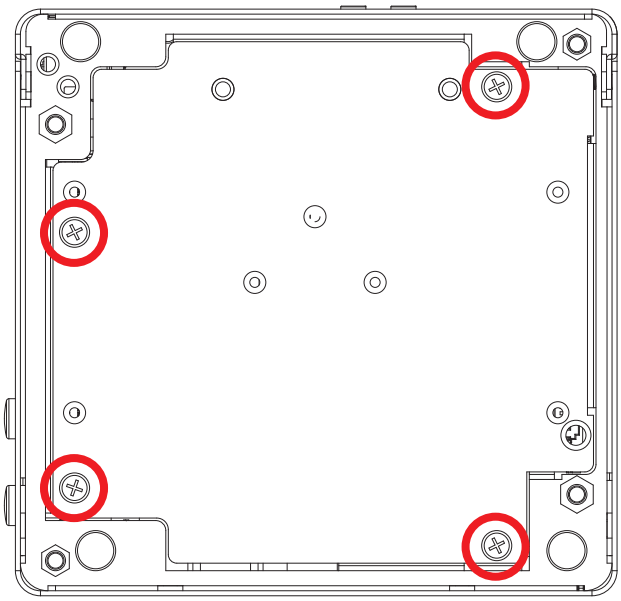

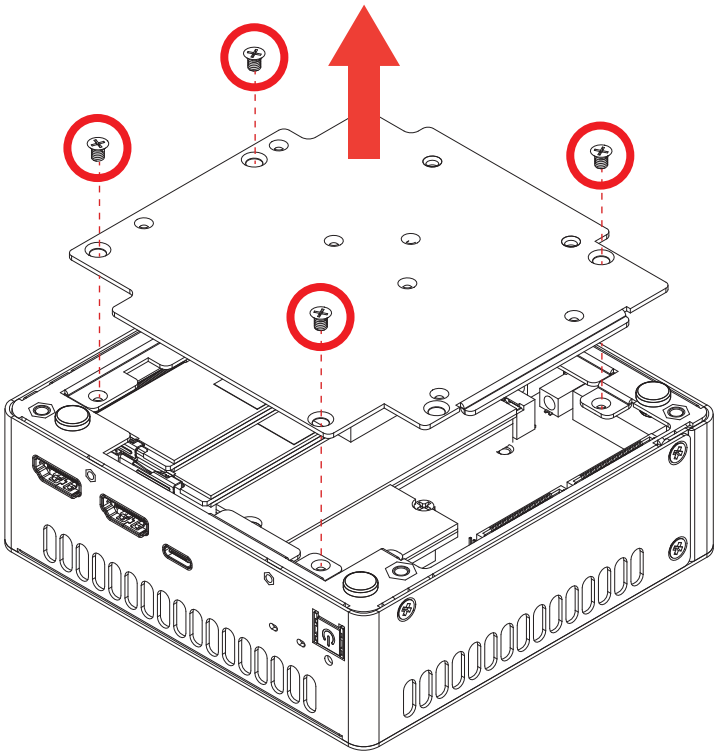

Step 2 Remove five flat head M3x4L screws and bottom cover of TGS-100.

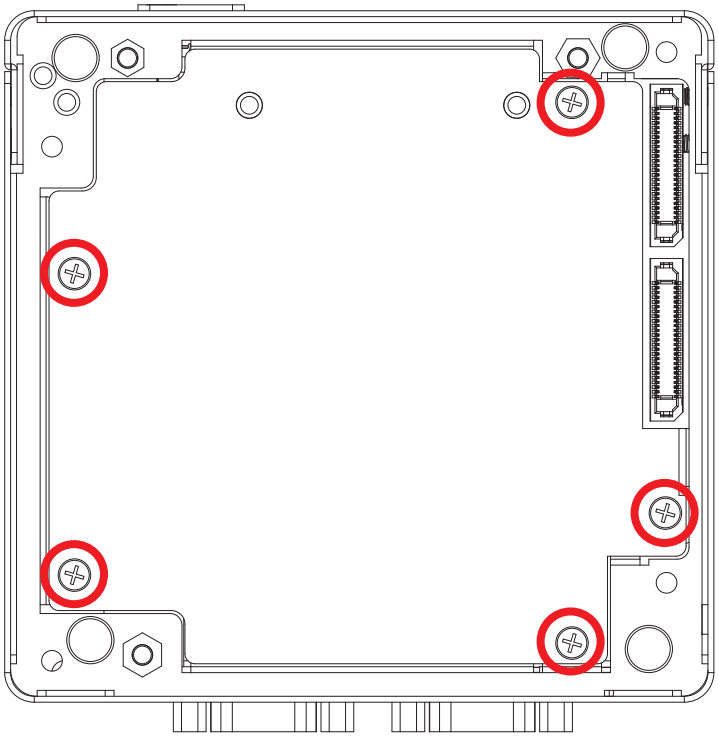

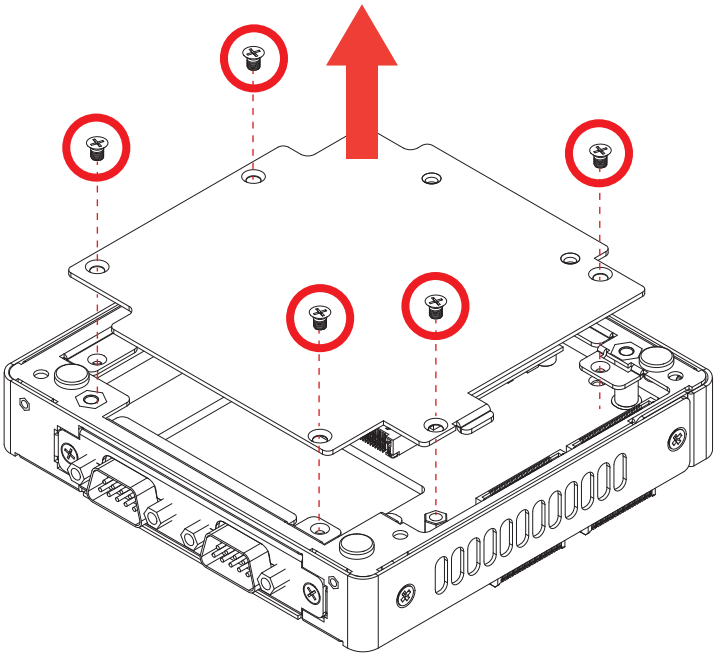

Step 3 Replace the thermal pad on the bottom cover from TGS-1000 to TGS-100.

Before replacement

TGS-1000 Botton cover

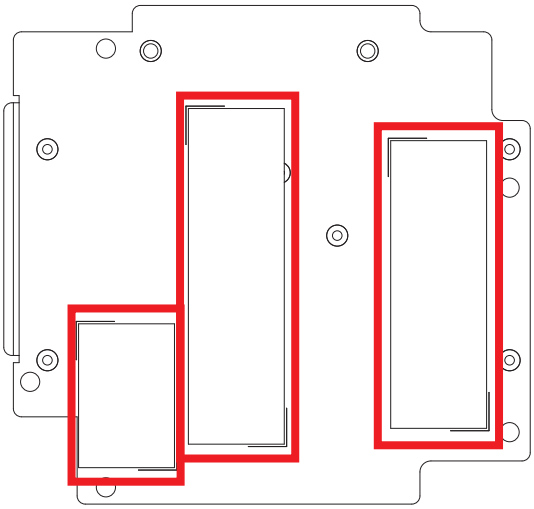

TGS-100 Botton cover

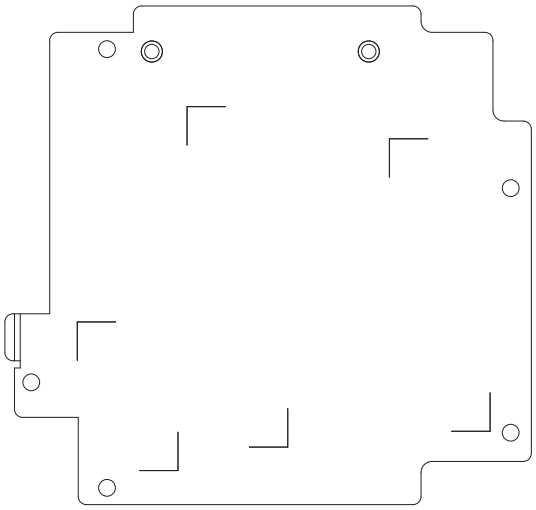

After replacement

TGS-1000 Botton cover

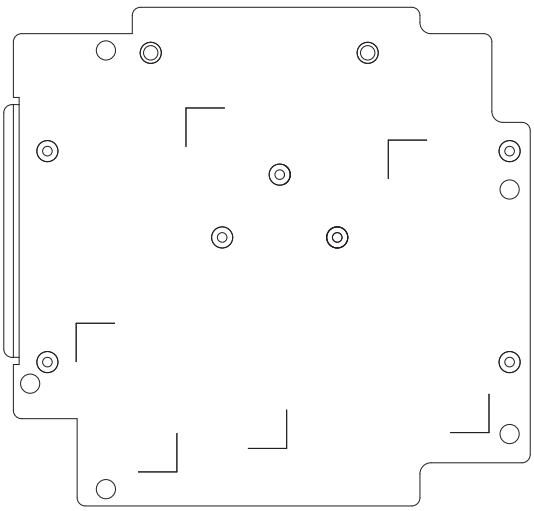

TGS-100 Botton cover

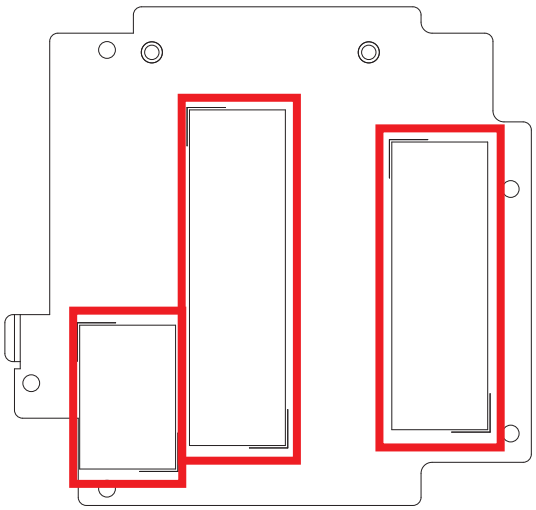

Step 4 Install the TGS-100 bottom cover onto TGS-1000 using four flat head M3x4L screws.

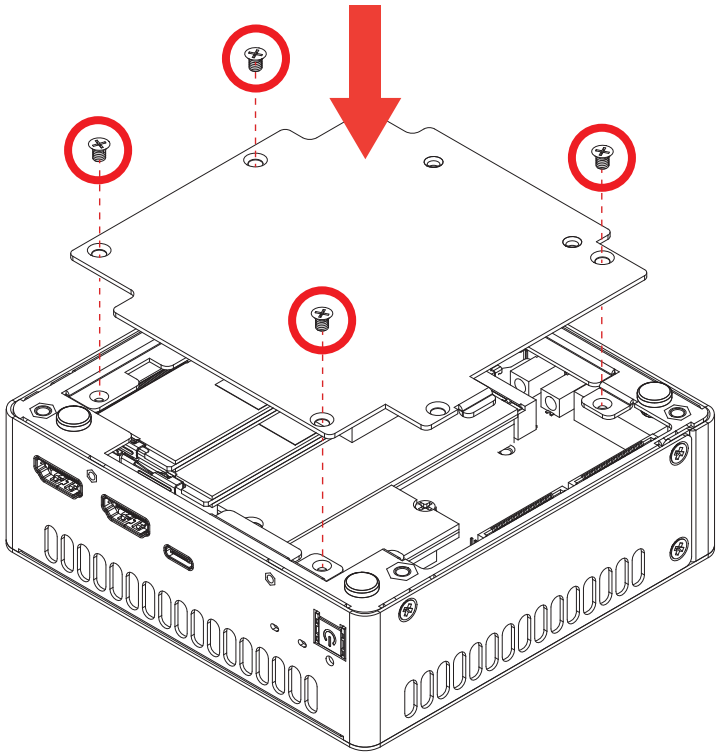

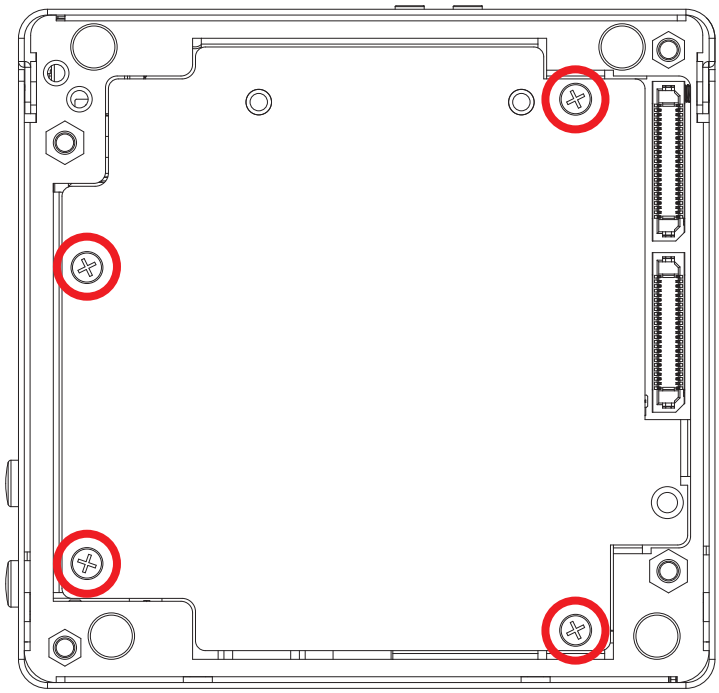

Step 5 Install the TGS-1000 bottom cover onto the TGS-100 using five flat head M3x4L screws.

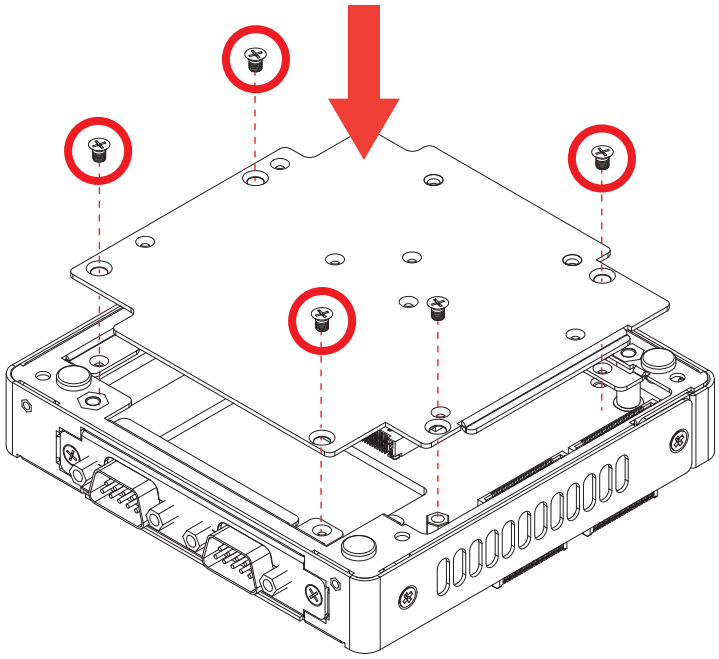

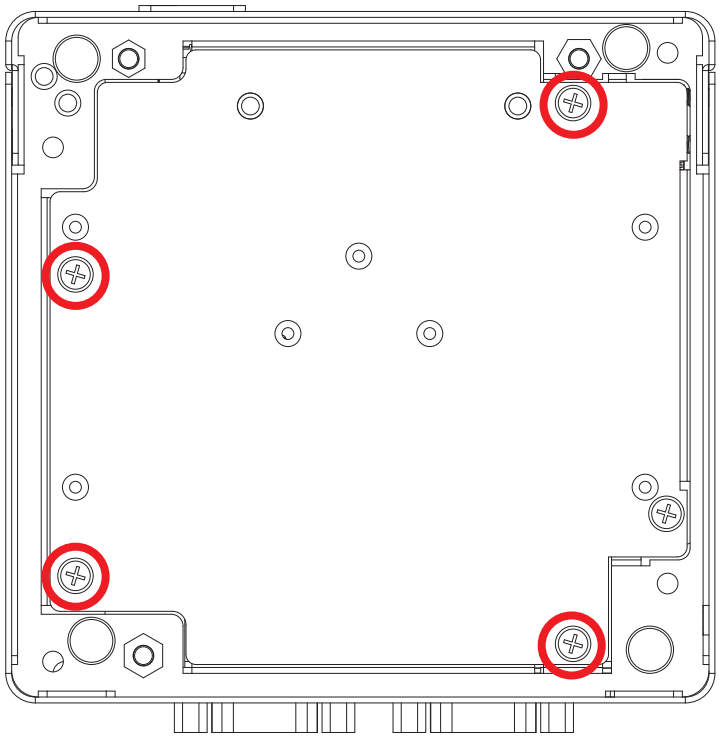

Step 6 Remove hole plug.

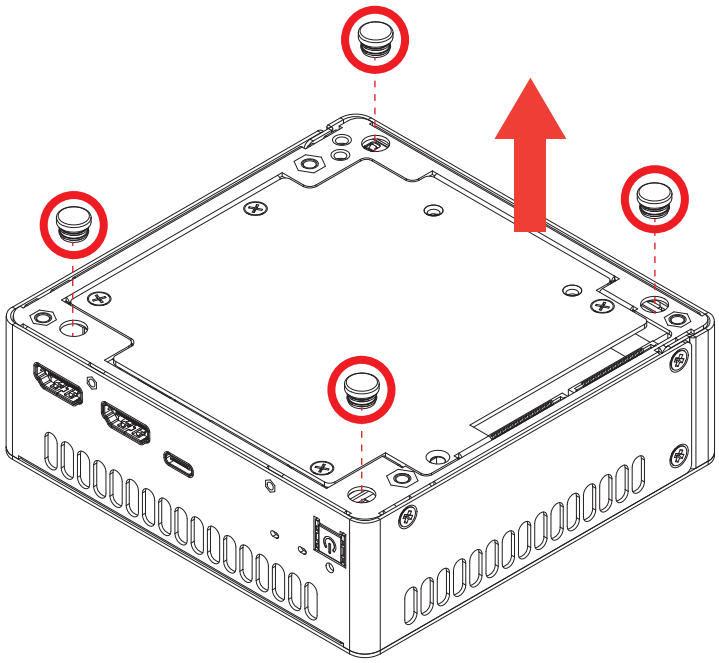

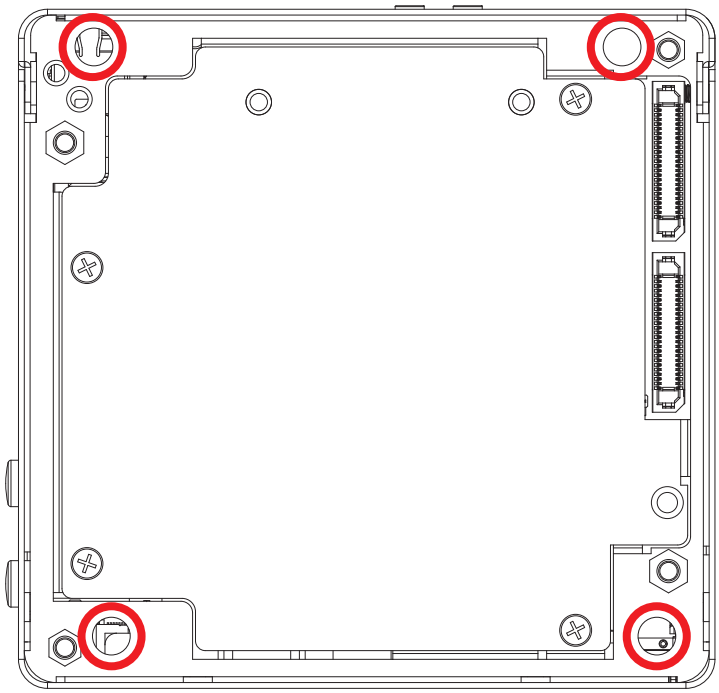

Step 7 Install four copper pillars(M3x19.5L) on the TGS-1000.

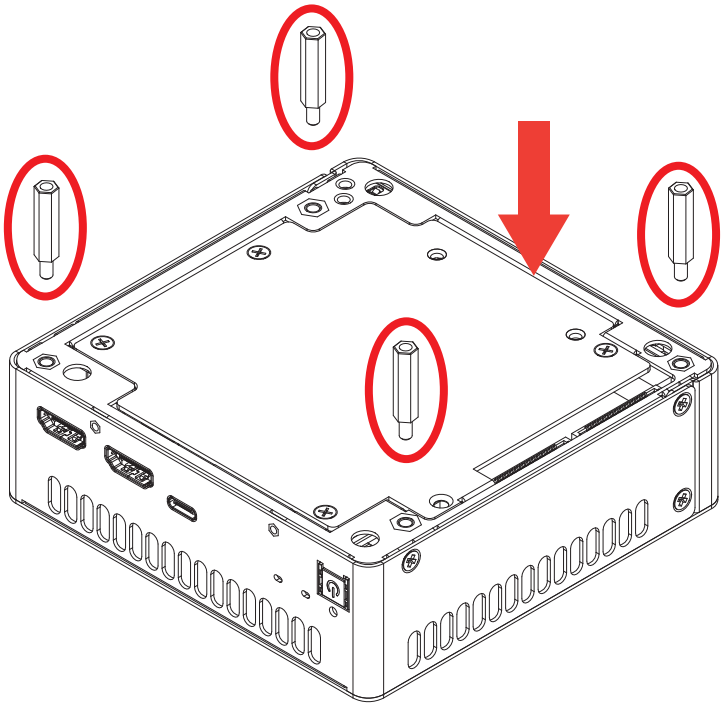

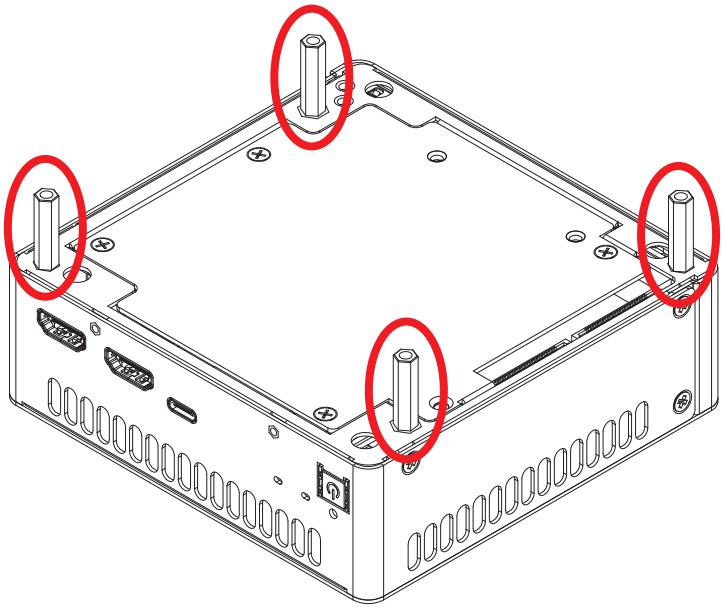

Step 8 Rotate 180 degrees to change the perspective.

Assemble the TGS-1000 and TGS-100 using I Head(M3x4L)screws.

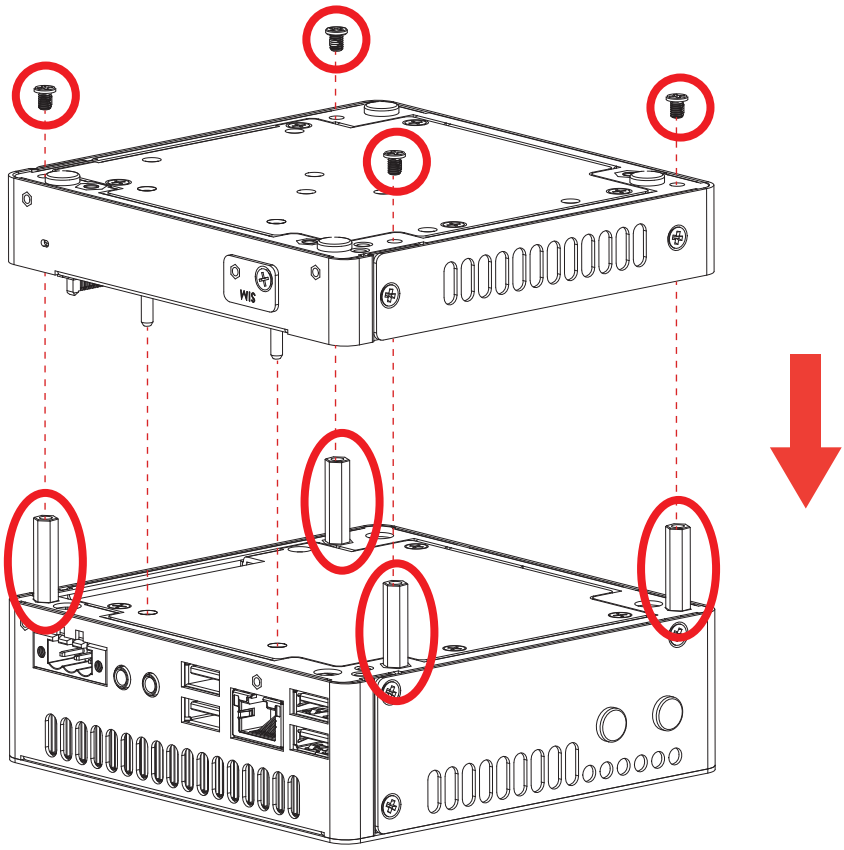

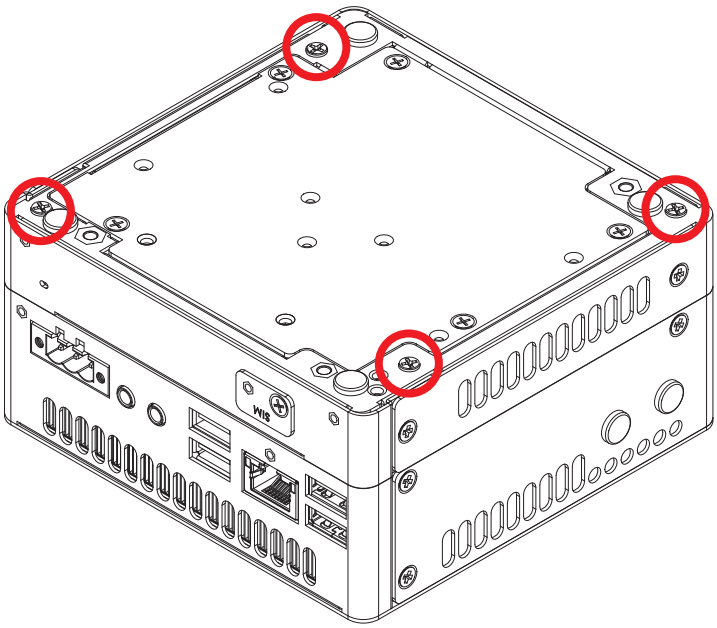

For the following models, if you want to assemble them with the TGS-1000, please refer to the TGS-1000 Docking TGS-101 assembly instructions.

Item	Module Name	Item	Module Name
1	TGS-102	3	TGS-106
2	TGS-105	4	TGS-107

3.4.2 Docking TGS-103

Step 1 Remove four flat head M3x4L screws and bottom cover of TGS-1000.

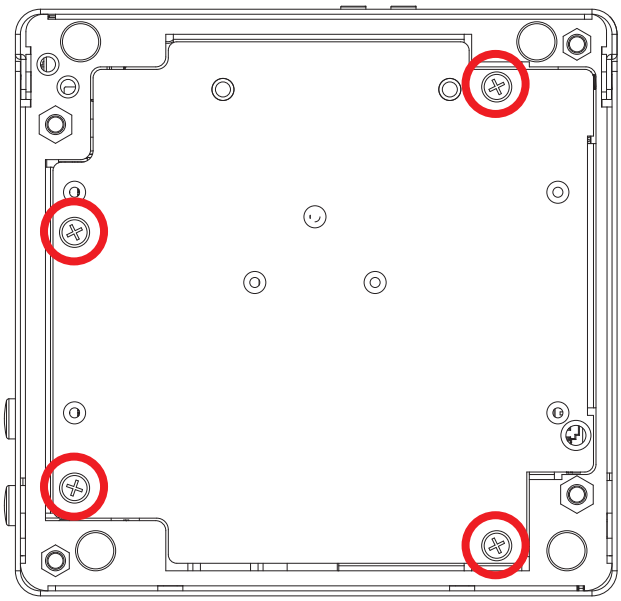

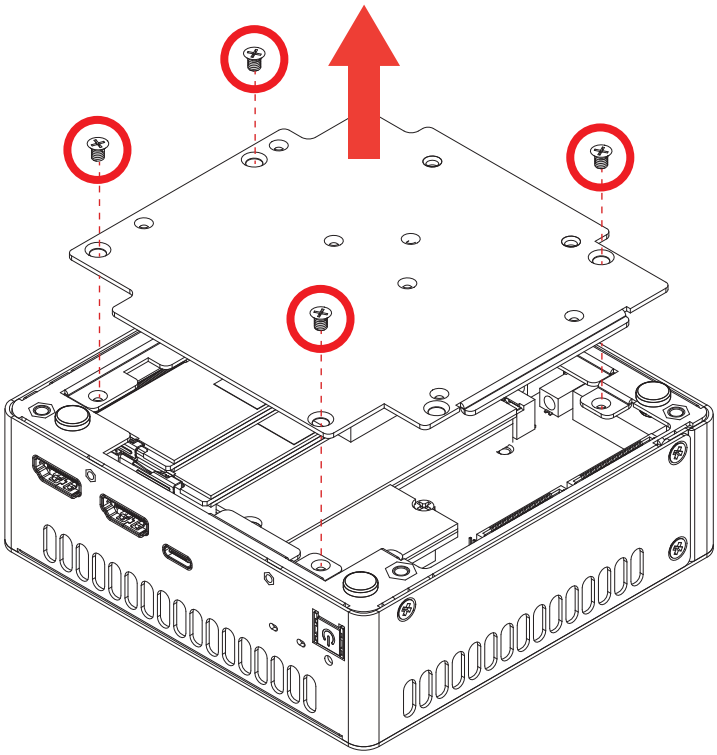

Step 2 Remove four flat head M3x4L screws and bottom cover of TGS-103.

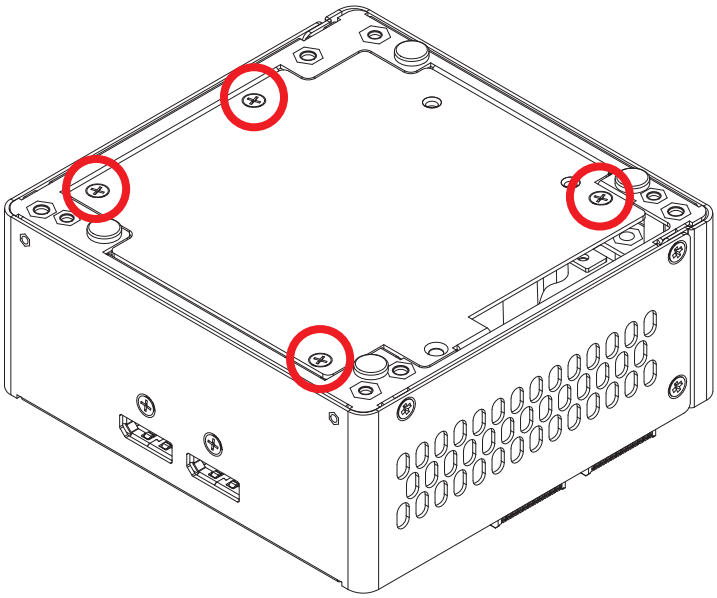

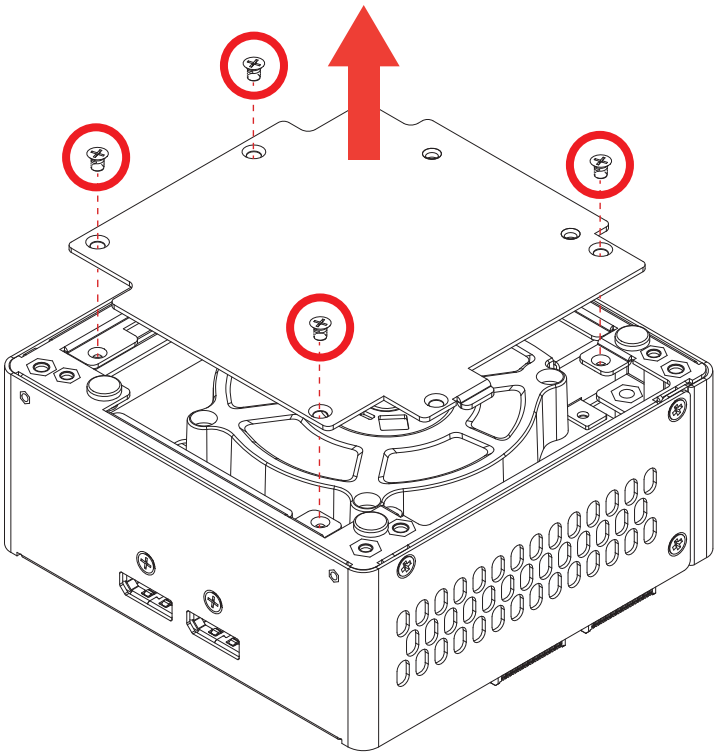

Step 3 Replace the thermal pad on the bottom cover from TGS-1000 to TGS-103.

Before replacement

TGS-1000 Botton cover

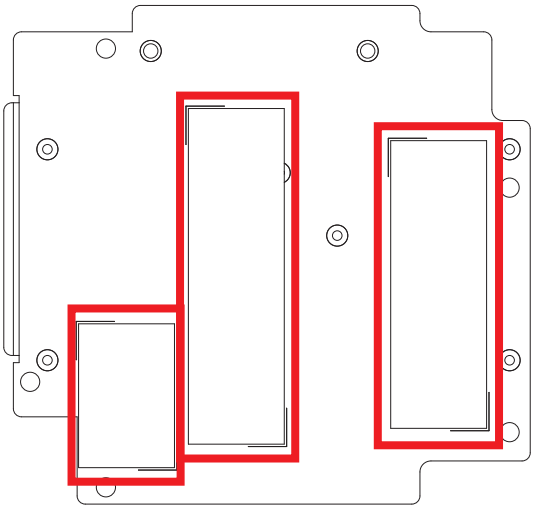

TGS-103 Botton cover

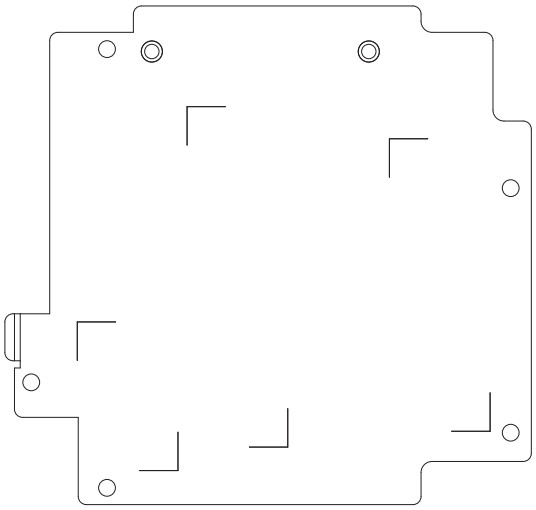

After replacement

TGS-1000 Botton cover

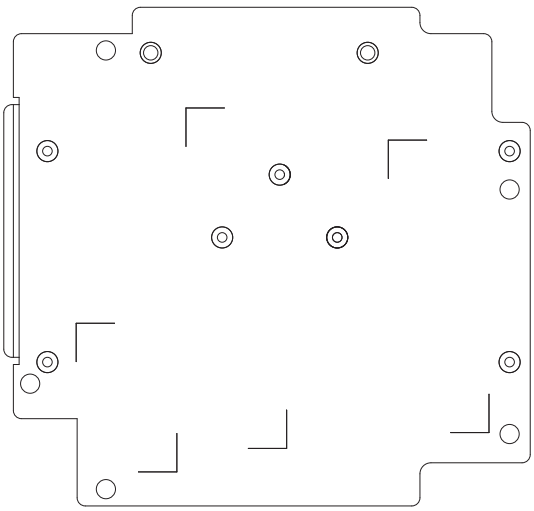

TGS-103 Botton cover

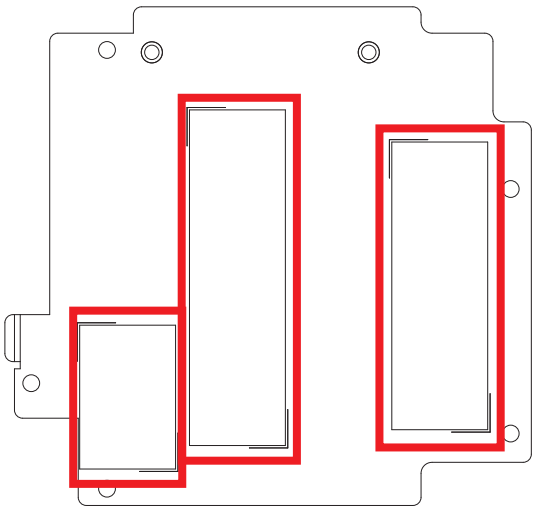

Step 4 Install the TGS-103 bottom cover onto TGS-1000 using four flat head M3x4L screws.

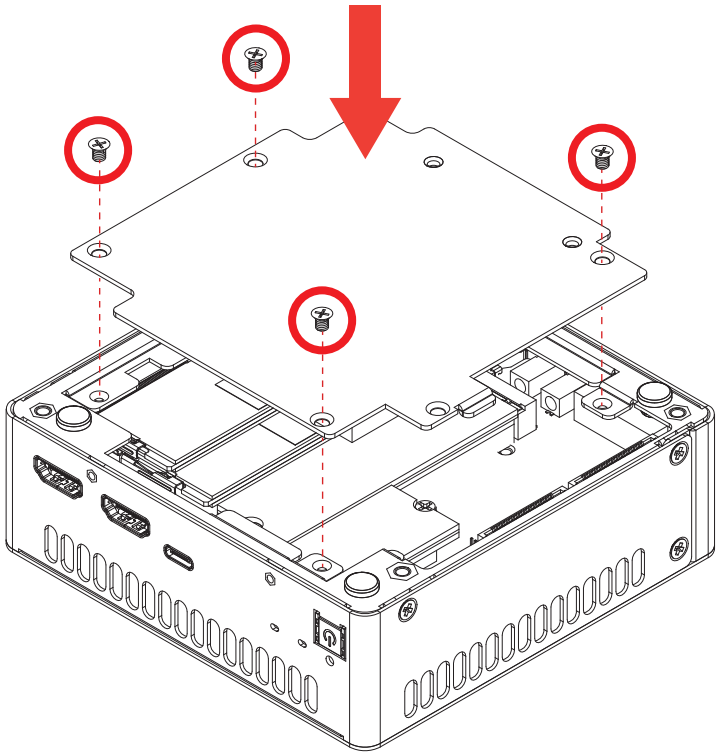

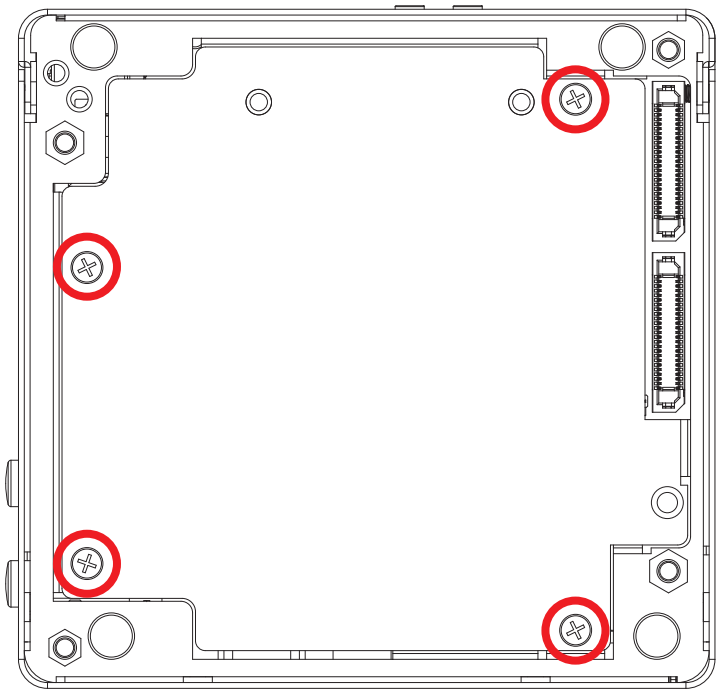

Step 5 Install the TGS-1000 bottom cover onto the TGS-103 using five flat head M3x4L screws.

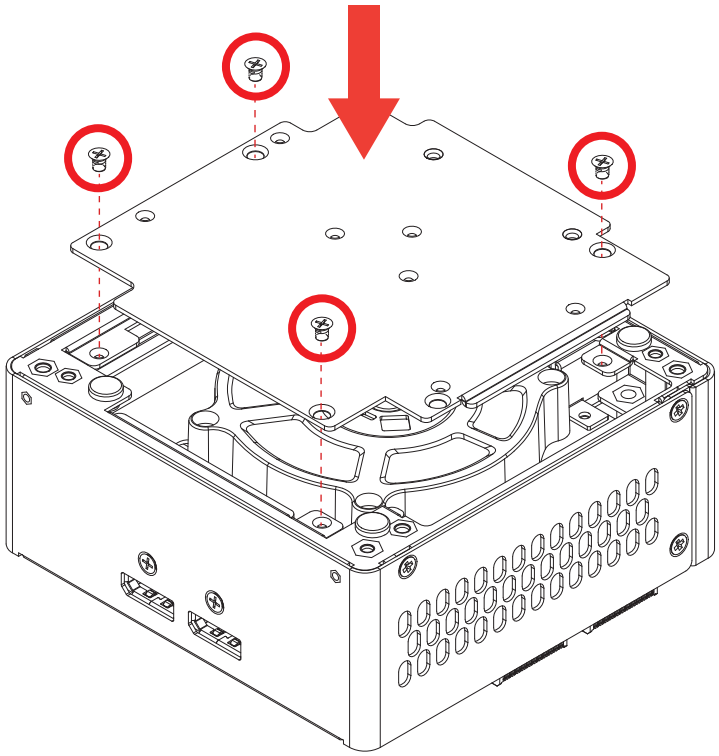

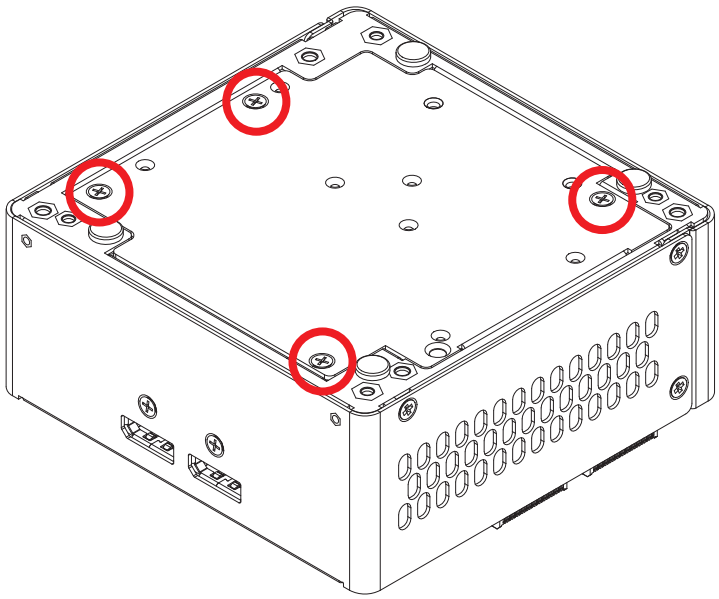

Step 6 Remove hole plug.

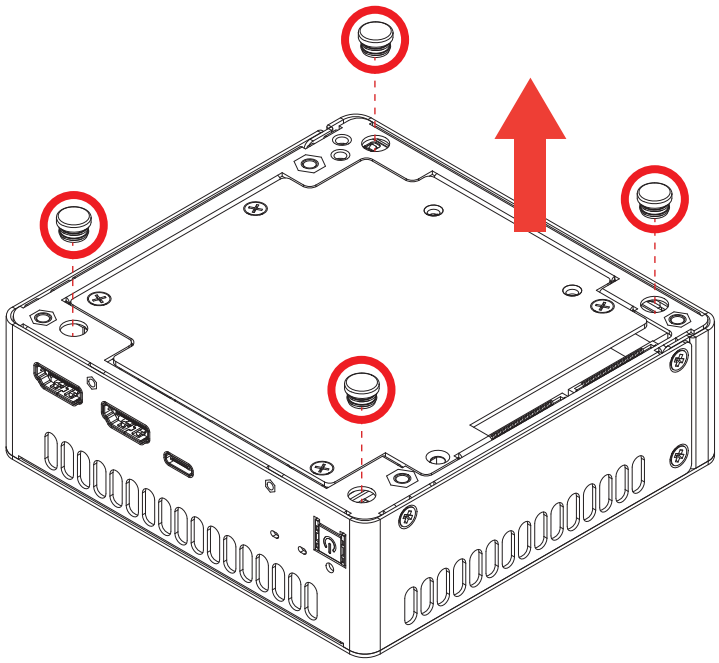

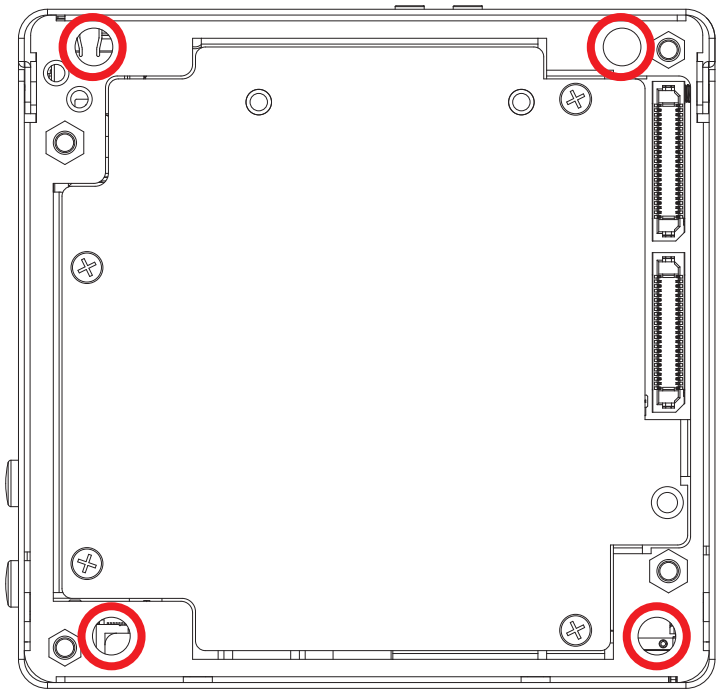

Step 7 Install four copper pillars(M3x35L) on the TGS-1000.

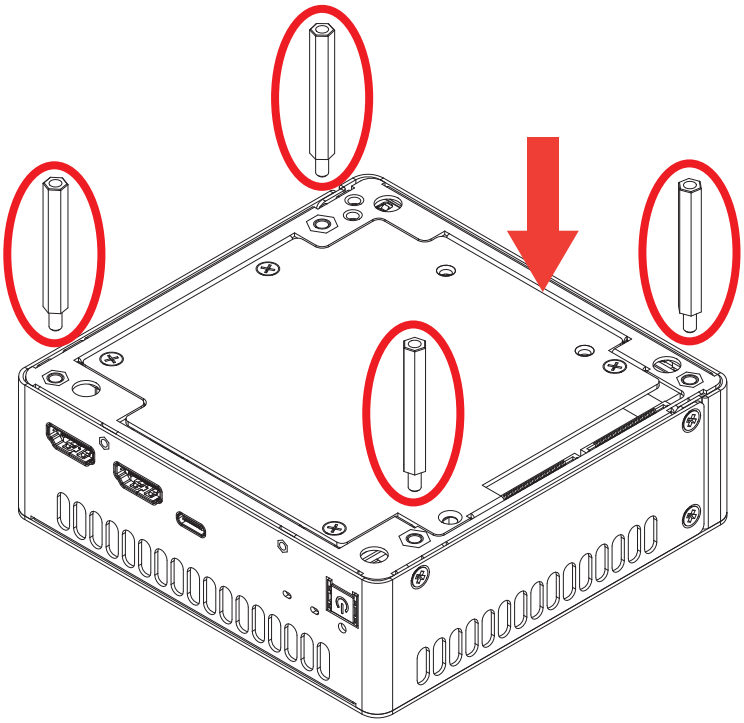

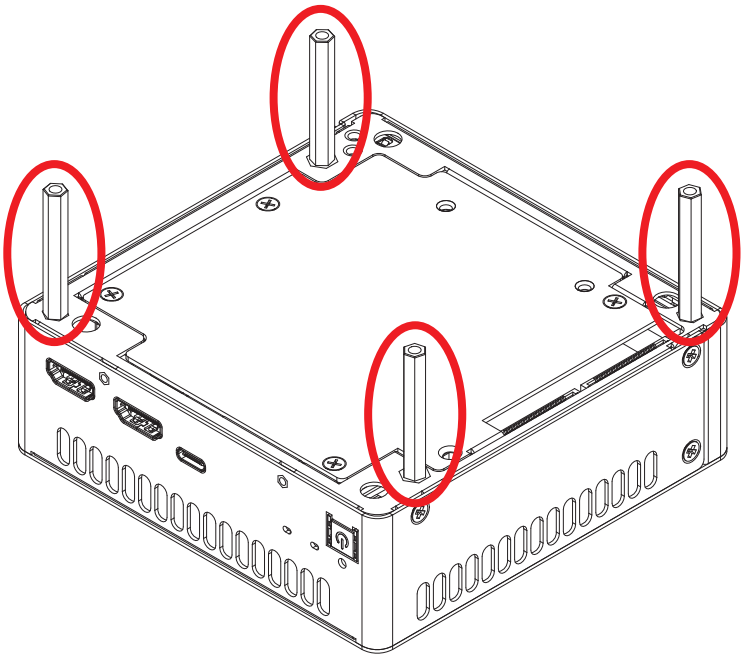

Step 8 Rotate 180 degrees to change the perspective.

Install the TGS-1000 and TGS-103 together with four I head M3x20.5L screws.

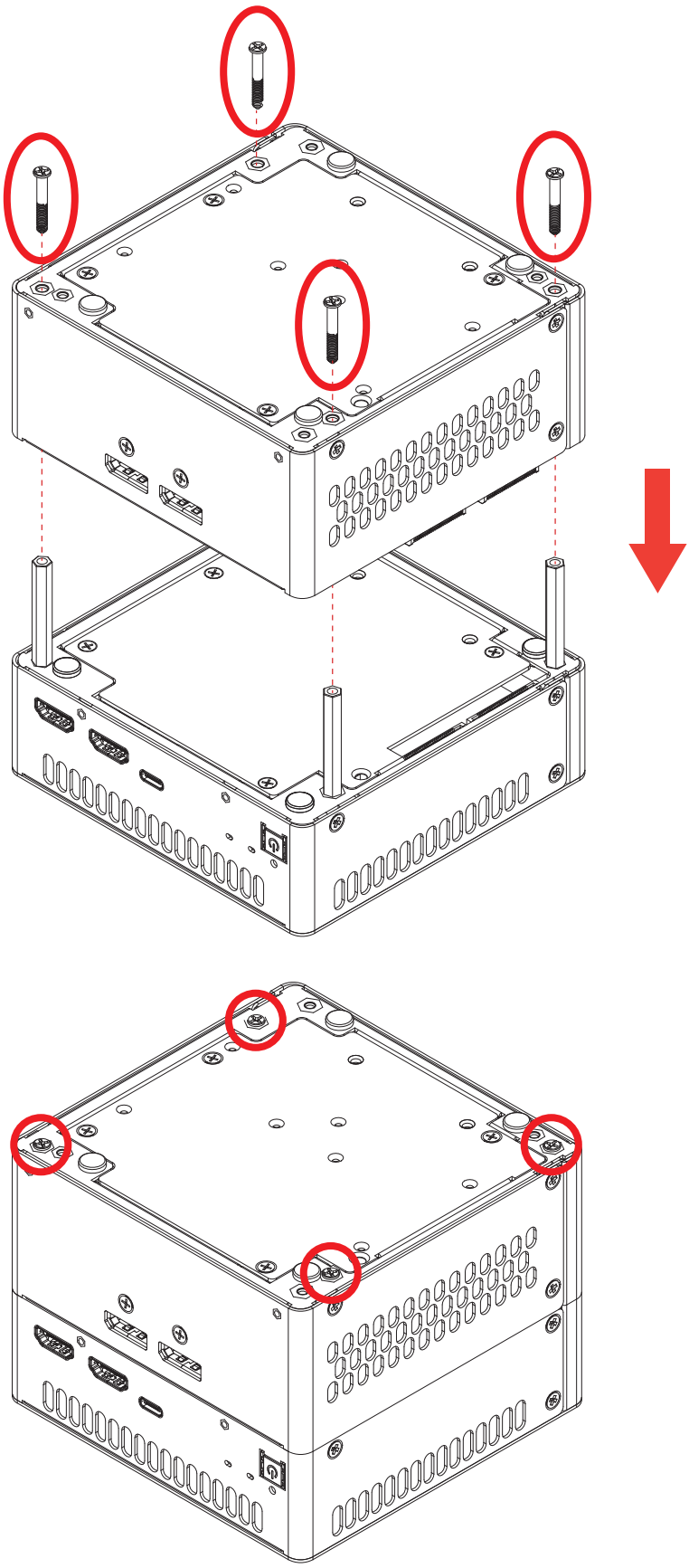

3.5 Mounting Your TGS-1000 Series

3.5.1 TGS-1000 Wall mount

Step 1 Installing Wall Mount Bracket with the four flat head M3x4L screws.

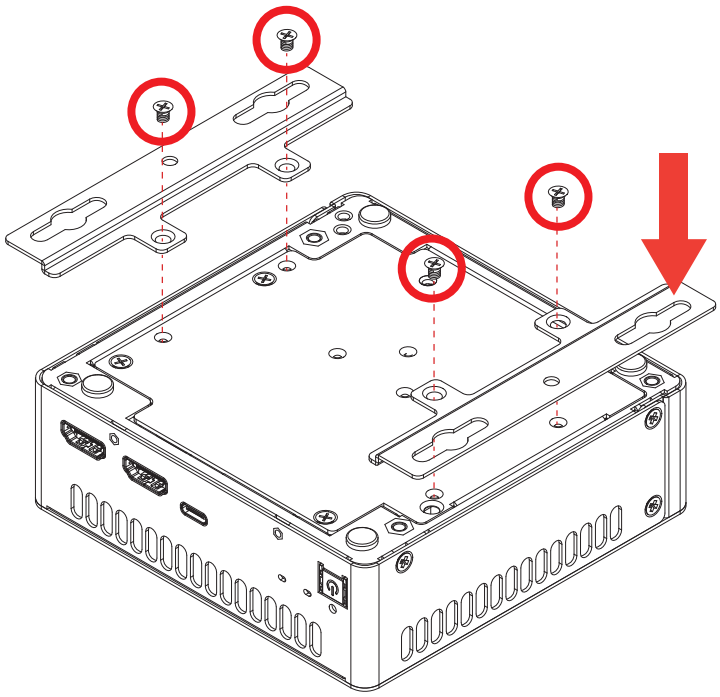

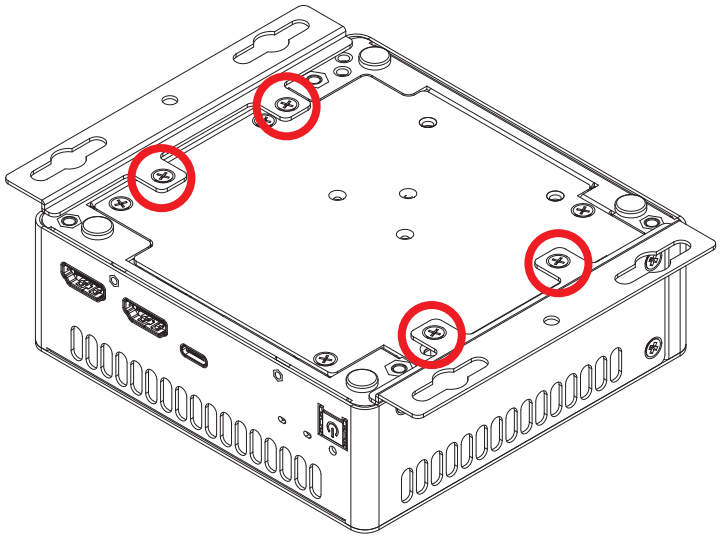

3.5.2 TGS-1000 VESA mount

Step 1 Mount the VESA on the wall; the screw specification is M4x10L, with a head thickness of less than 7mm.

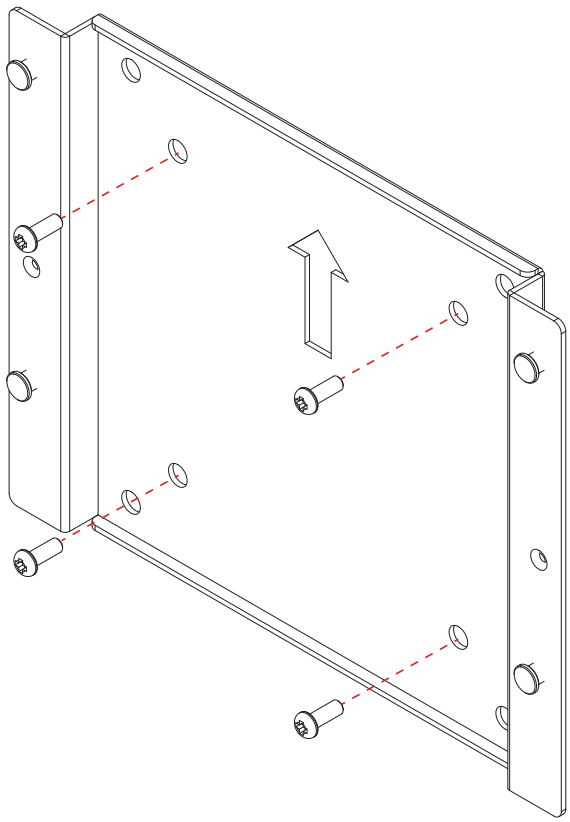

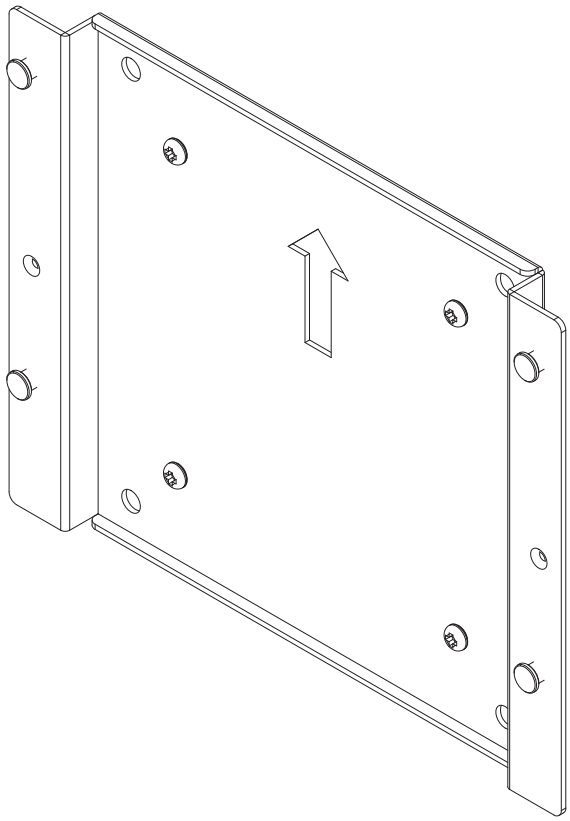

Step 2 Install the TGS-1000 onto the VESA mount with two Phillips M3x4L.

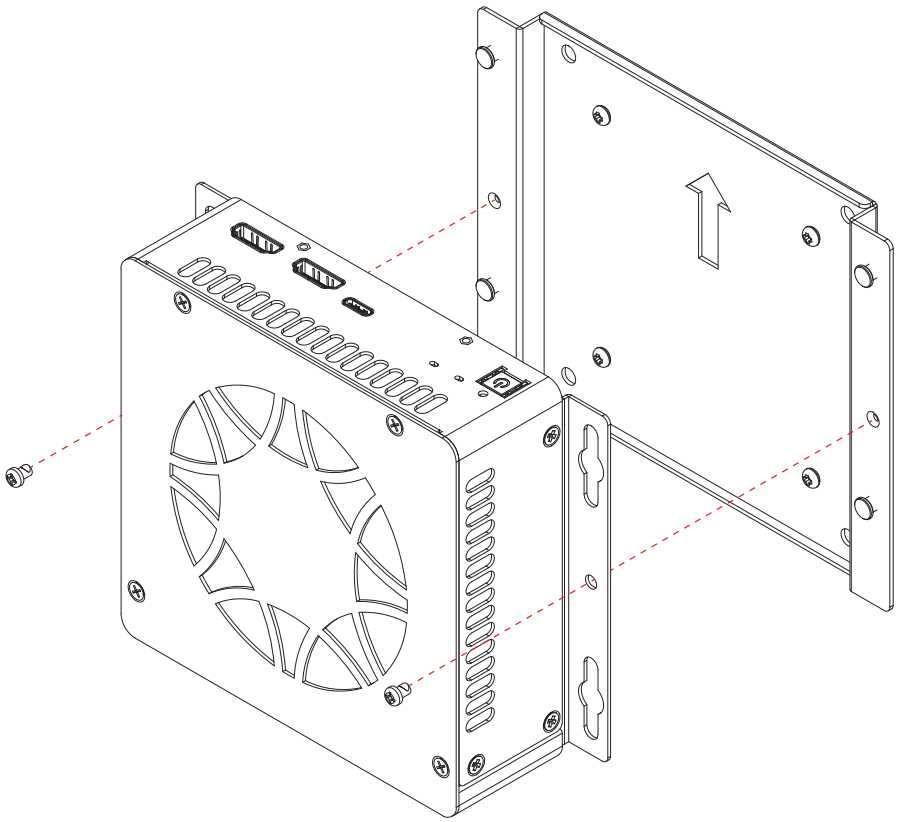

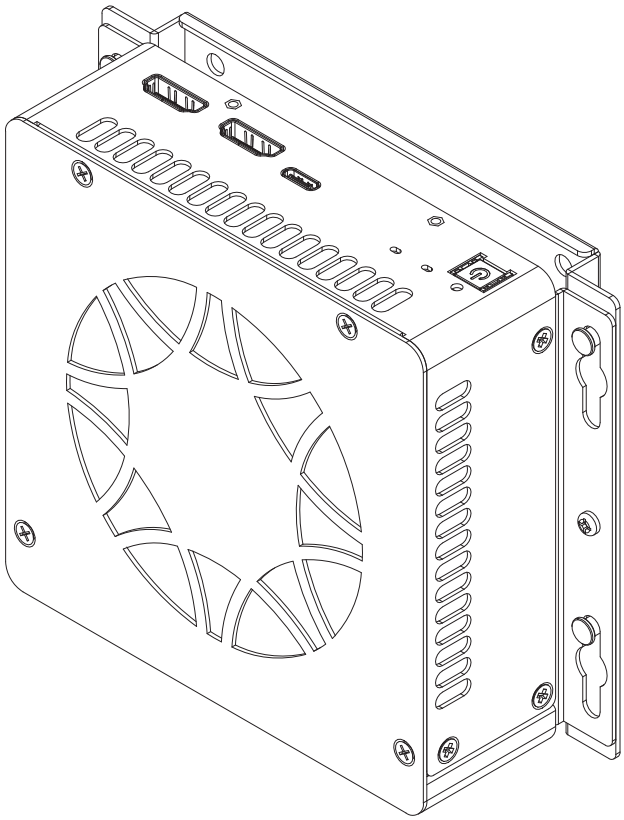

3.5.3 TGS-1500 Wall mount

Step 1 Installing Wall Mount Bracket with the four flat head M3x4L screws.

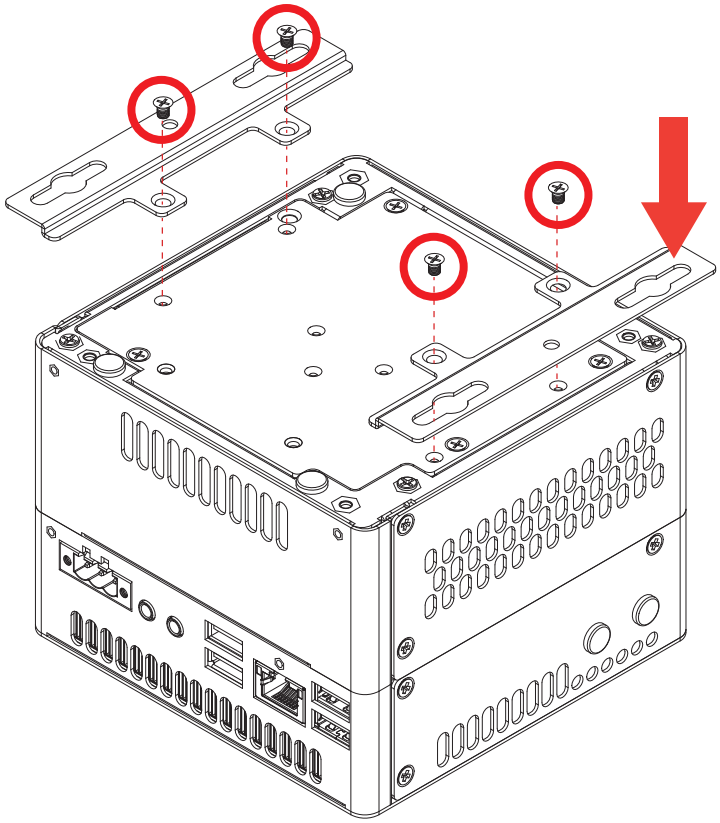

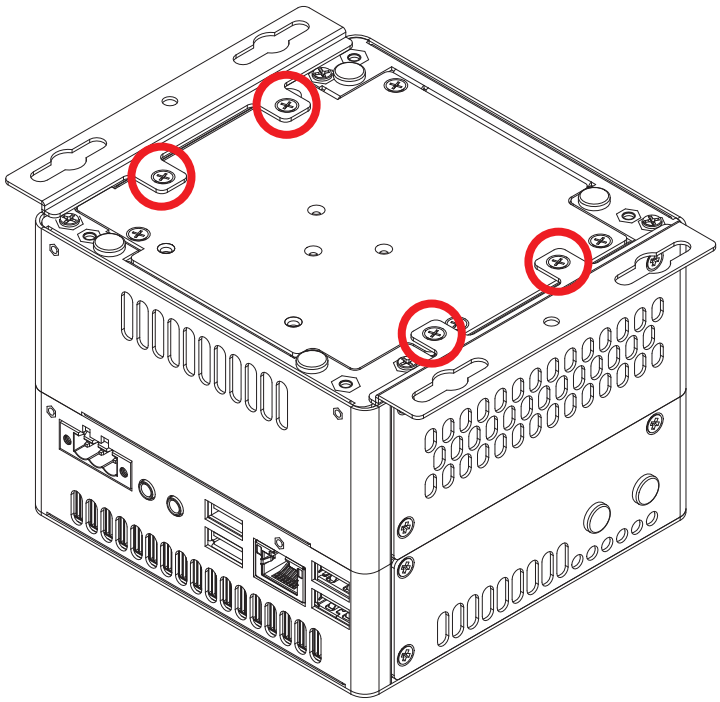

3.5.4 TGS-1500 VESA mount

Step 1 Mount the VESA on the wall; the screw specification is M4x10L, with a head thickness of less than 7mm.

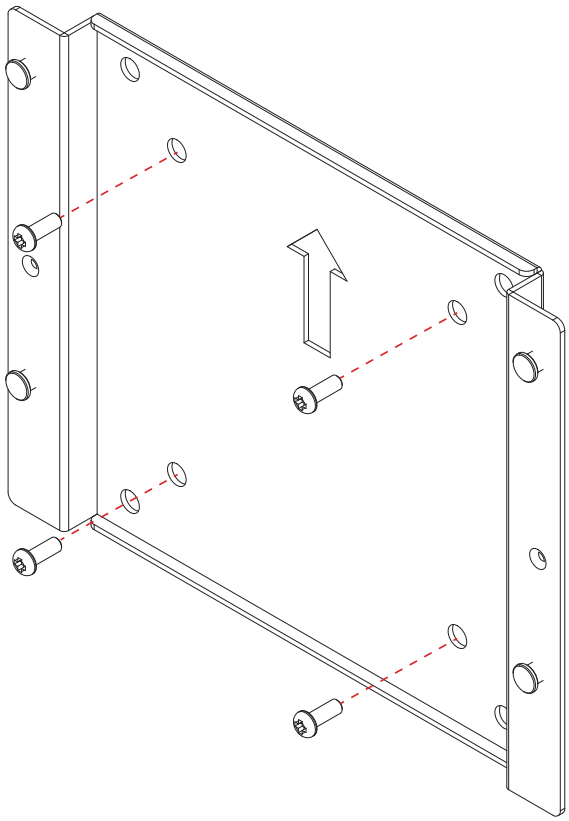

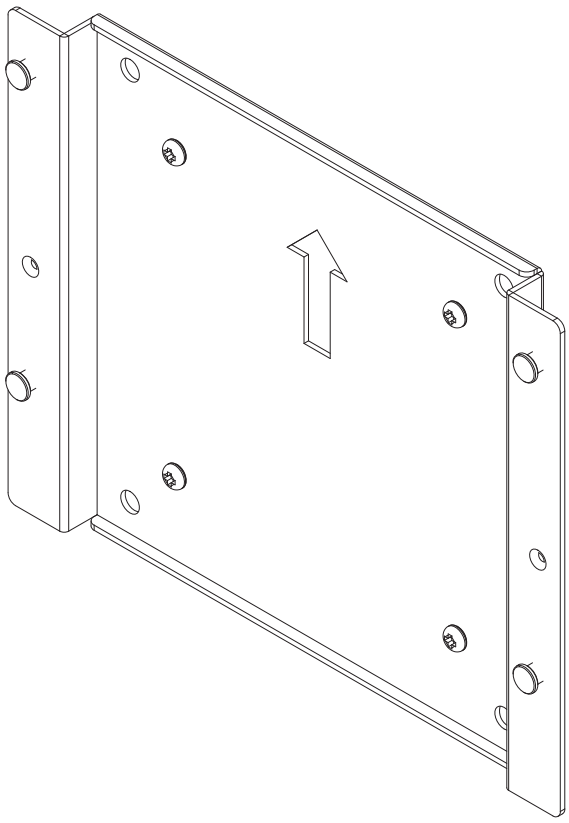

Step 2 Install the TGS-1500 onto the VESA mount with two Phillips M3x4L.

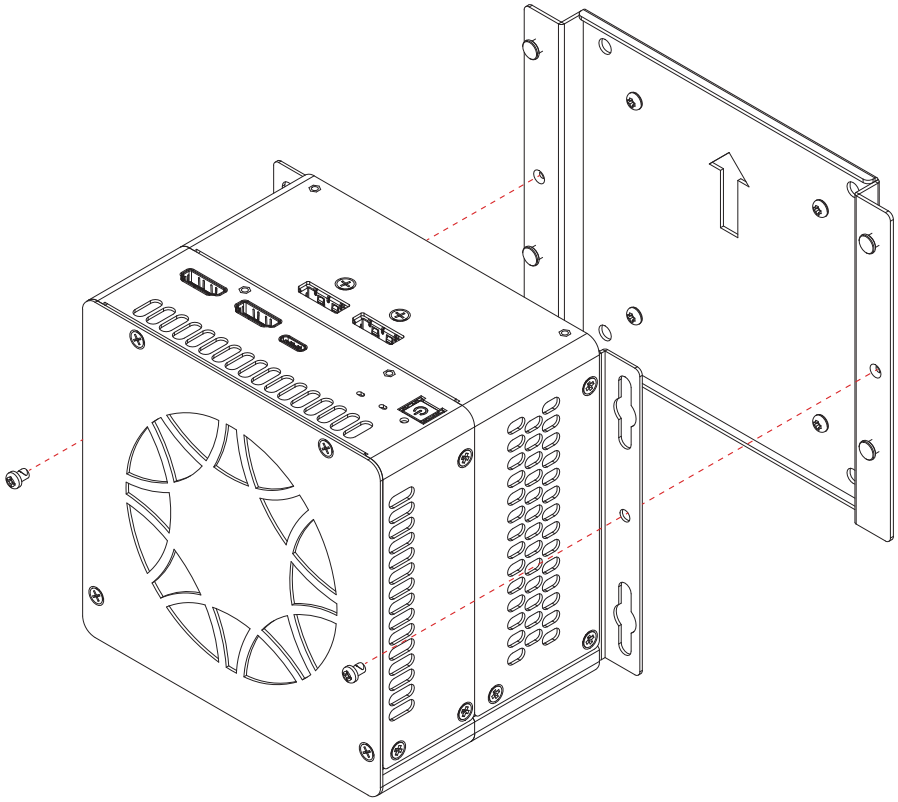

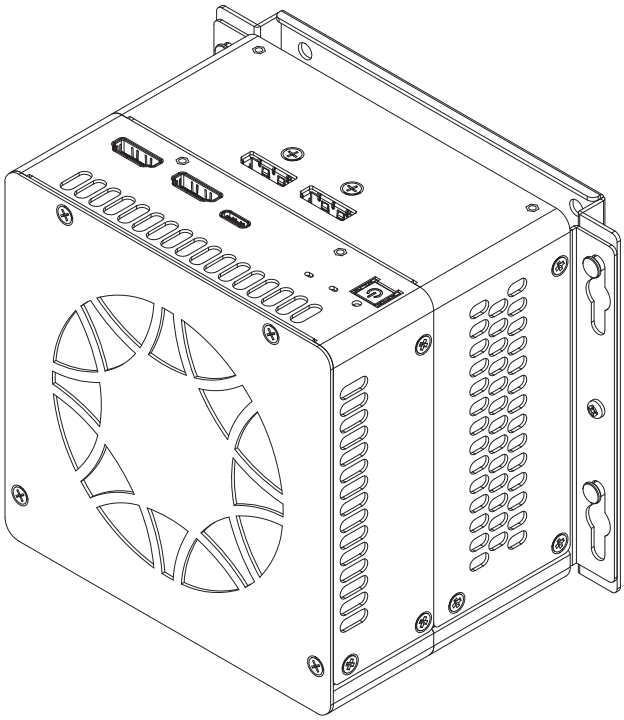

3.5.5 TGS-100 Wall mount

Step 1 Installing Wall Mount Bracket with the four flat head M3x4L screws.

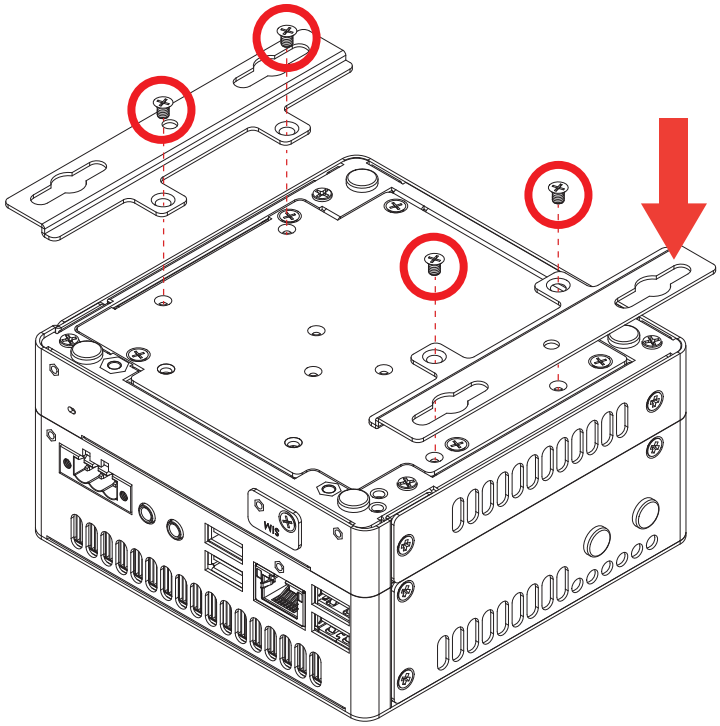

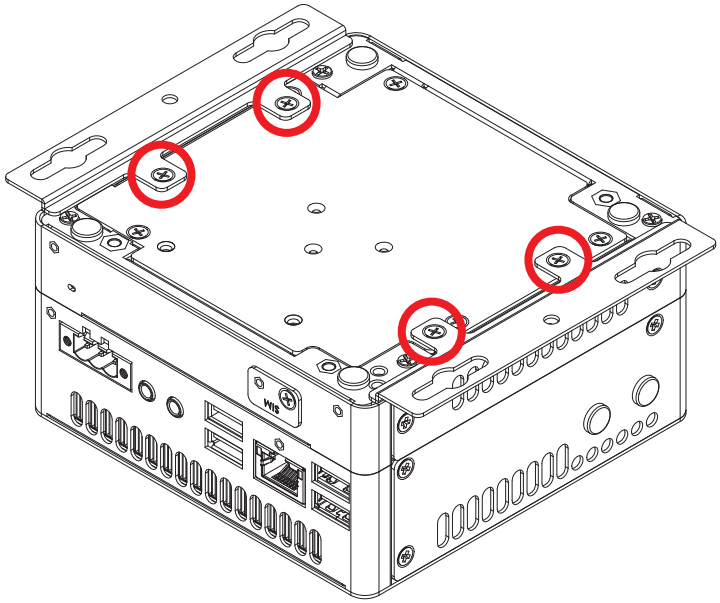

3.5.6 TGS-100 VESA mount

Step 1 Mount the VESA on the wall; the screw specification is M4x10L, with a head thickness of less than 7mm.

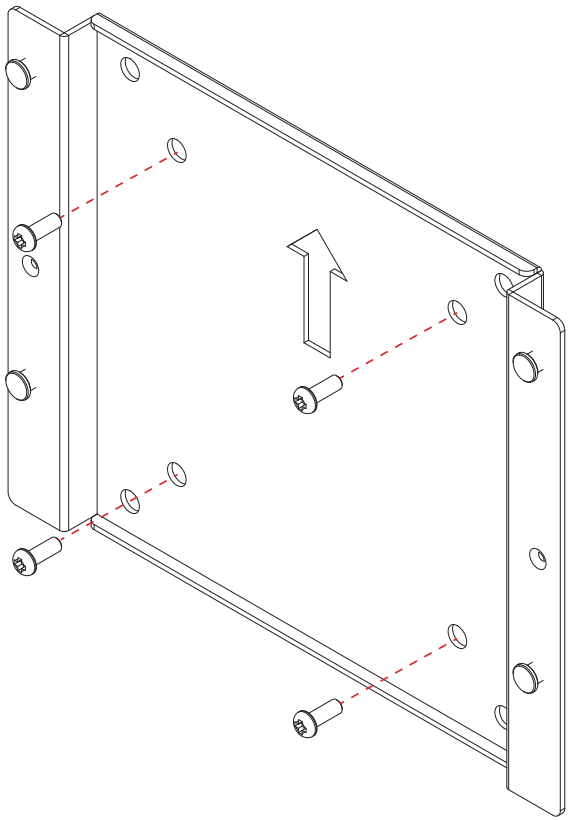

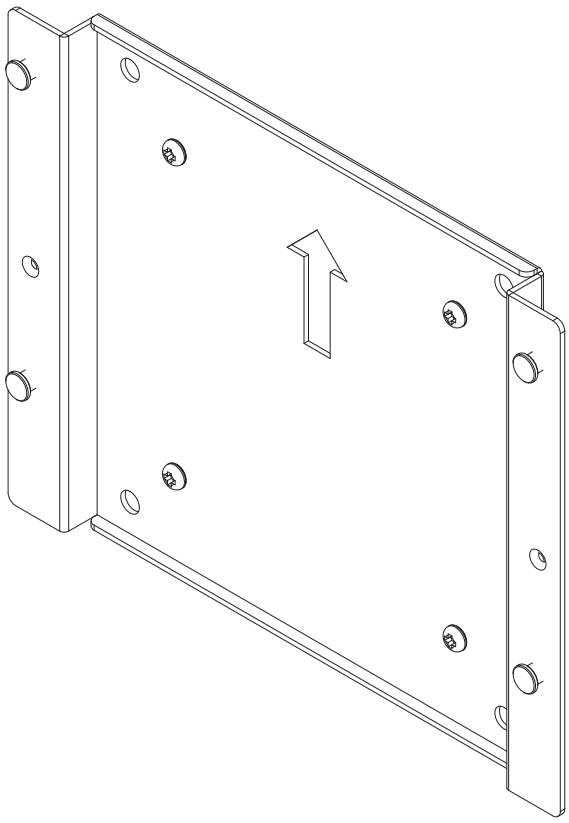

Step 2 IInstall the TGS-100 onto the VESA mount with two Phillips M3x4L.

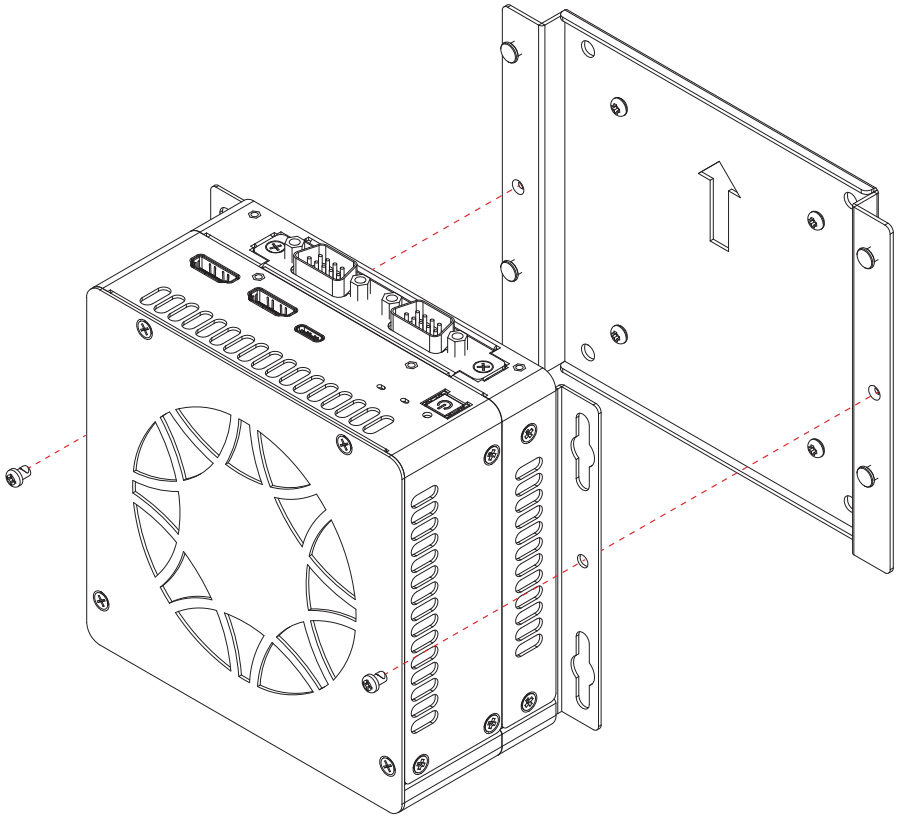

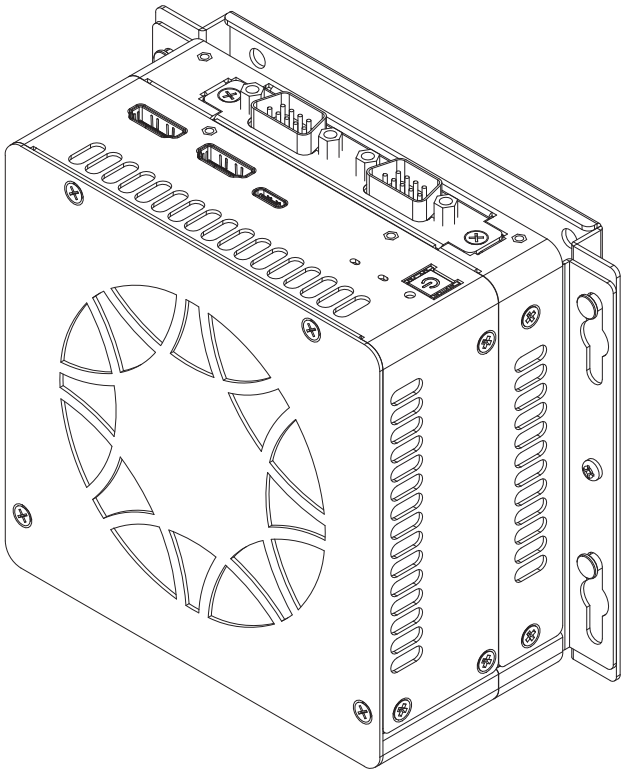

4

BIOS AND DRIVER SETUP

4.1 BIOS Setting

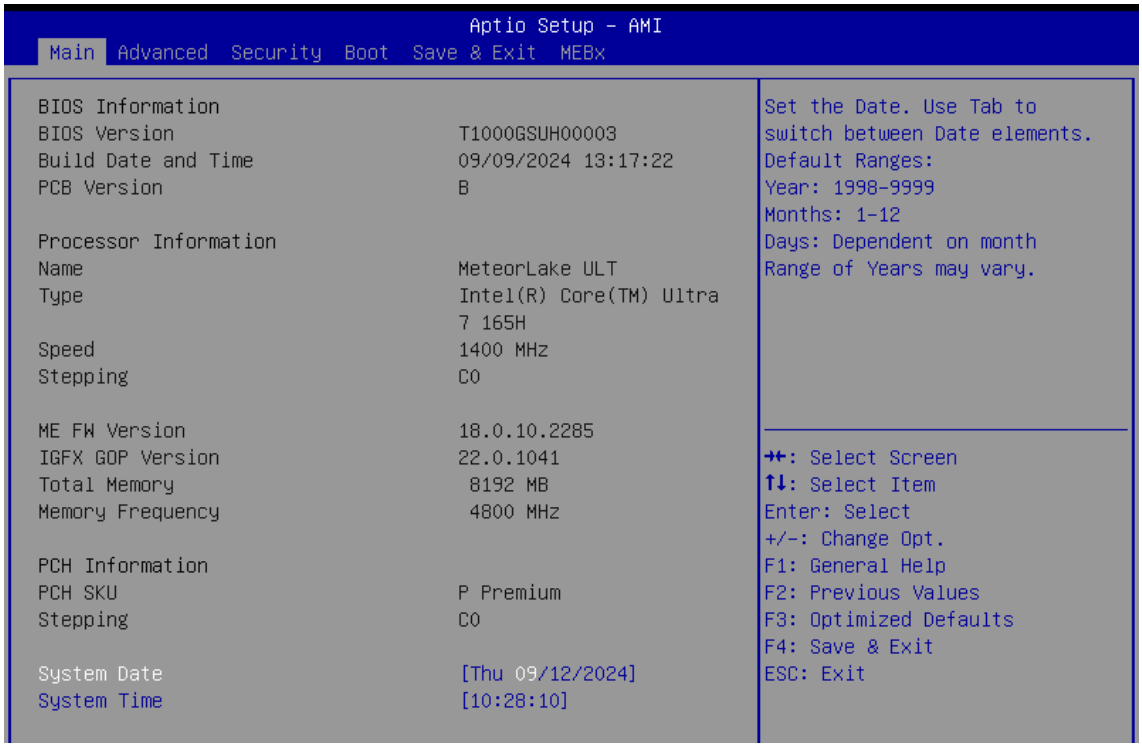

Figure 4-1 : Entering Setup Screen

BIOS provides an interface for users to check and change system configuration. The BIOS setup program is accessed by pressing the <Del> key when POST display output is shown.

4.2 Main Menu

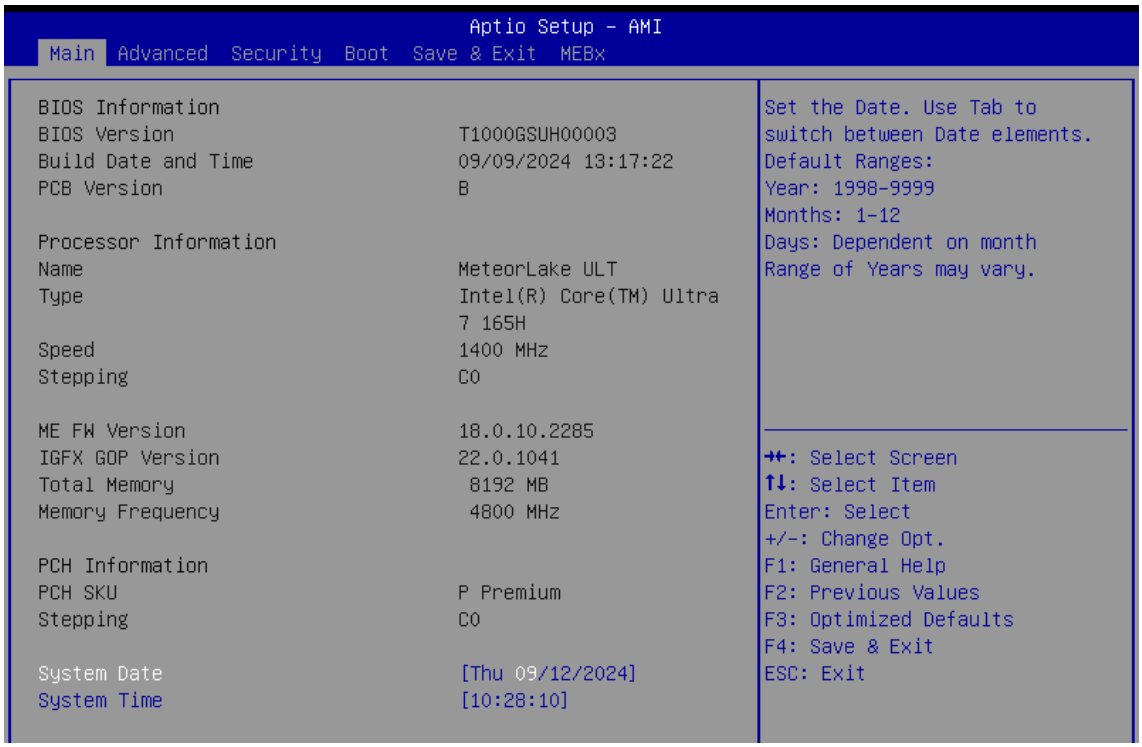

Figure 4-2 : Main Menu

The main menu displays BIOS version and system information. There are two options on Main menu.

System Date

Set the Date. Use Tab to switch between Date elements.

Default Ranges :

Year : 1998-9999

Months : 1-12

Days : Dependent on month Range of Years may vary.

System Time

Set the Time. Use Tab to switch between Time elements.

4.3 Advanced Function

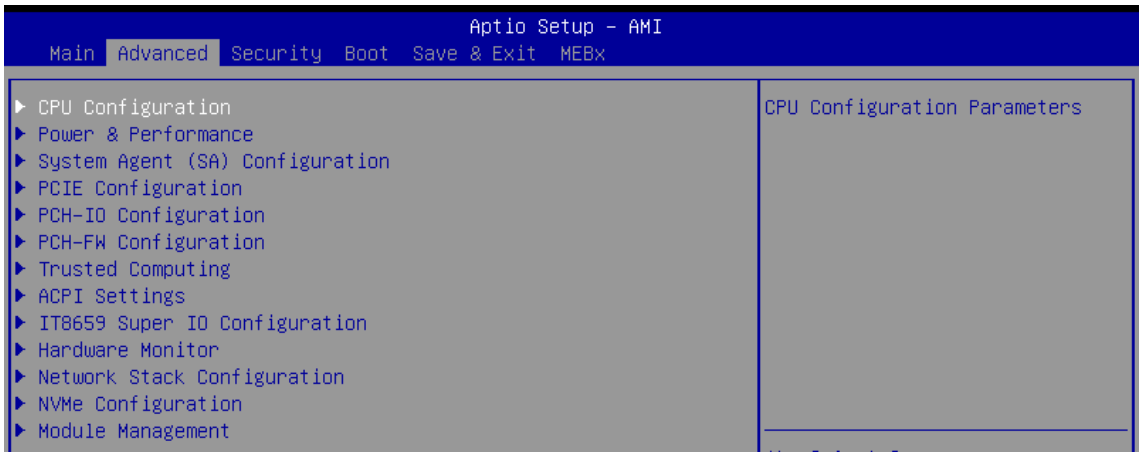

Figure 4 3 : Advanced Function

Select advanced tab to enter advanced BIOS setup options such as CPU configuration, ACPI settings, and Super IO configuration.

4.3.1 CPU Configuration

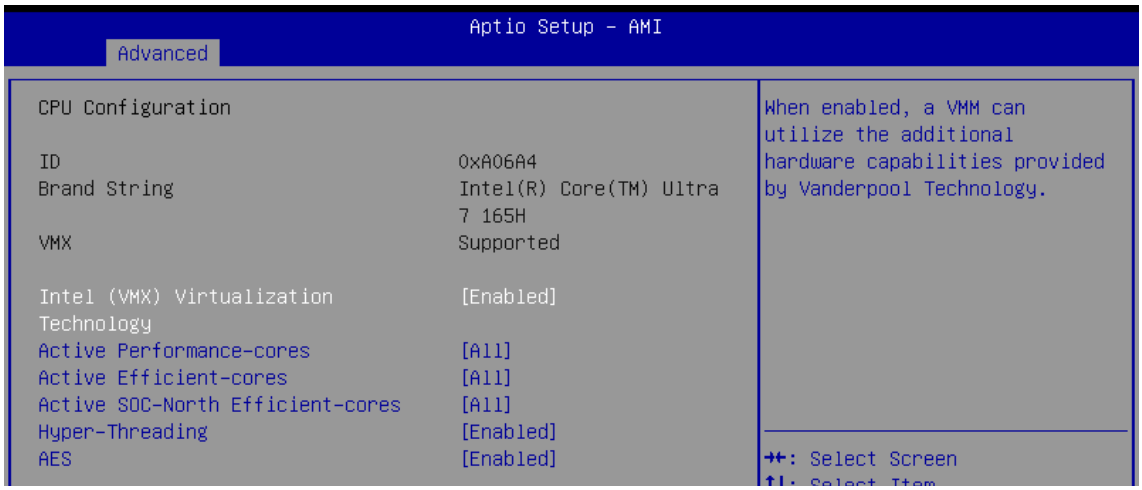

Figure 4 3-1 : CPU Configuration

Intel (VMX) Virtualization Technology
When enabled, a VMM can utilize the additional hardware capabilities provided by Vanderpool Technology.

Active Performance-cores
Number of P-cores to enable in each processor package. Note : Number of Cores and E-Cores are looked at together. When both are {0,0}, Pcode will enable all cores.

Active Efficient-cores
Number of E-cores to enable in each processor package. Note : Number of Cores and E-Cores are looked at together. When both are {0,0}, Pcode will enable all cores.

Active SOC-North Efficient-cores
Number of SOC-North Efficient-cores to enable in SOC North.

Hyper-Threading
Enable or Disable Hyper-Threading Technology.

AES
Enable/Disable AES (Advanced Encryption Standard)

4.3.2 CPU - Power Management Control

Figure 4 3-2 : CPU - Power Management Control

Turbo Mode
Enable/Disable processor Turbo Mode.

View/Configure Turbo Options
View/Configure Turbo Options

4.3.3 Memory Configuration

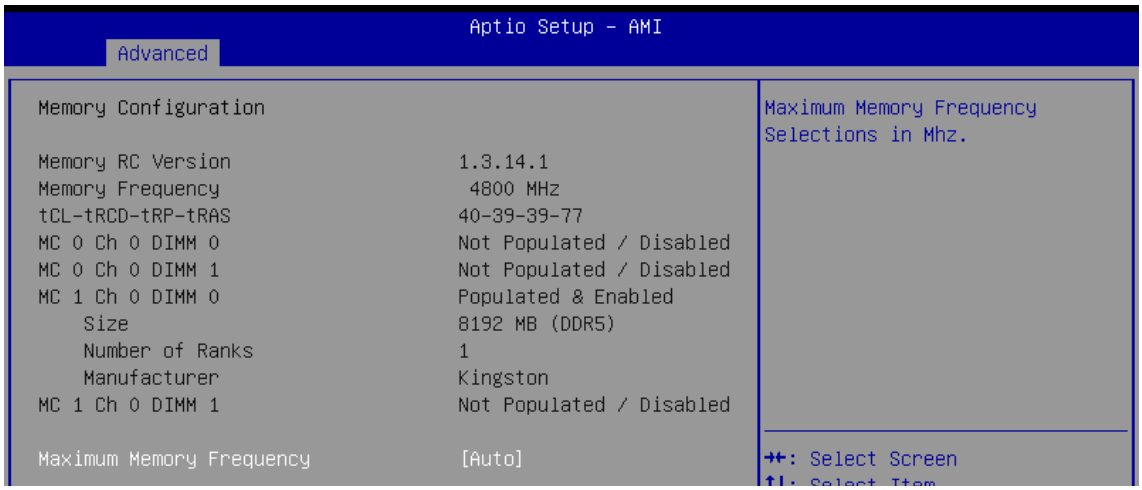

Figure 4 3-3 : Memory Configuration

Maximum Memory Frequency
Maximum Memory Frequency Selections in Mhz.

4.3.4 Graphics Configuration

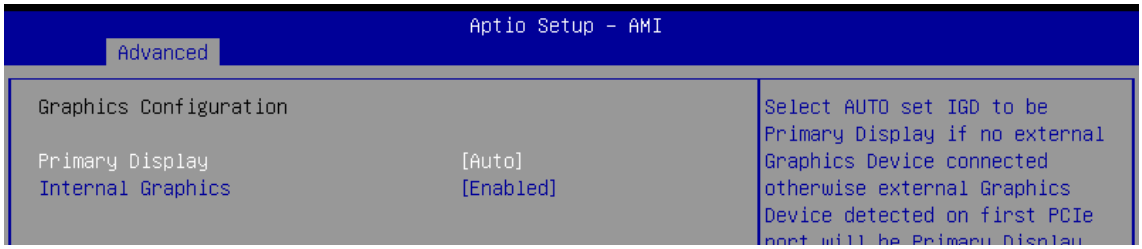

Figure 4 3-4 : Graphics Configuration

Primary Display

Select AUTO set IGD to be Primary Display if no external Graphics Device connected otherwise external Graphics Device detected on first PCIe port will be Primary Display or Select IGFX for IGD to be Primary Display Or Select HG for Hybrid Gfx.

Internal Graphics

Keep IGFX enabled based on the setup options.

4.3.5 VMD Configuration

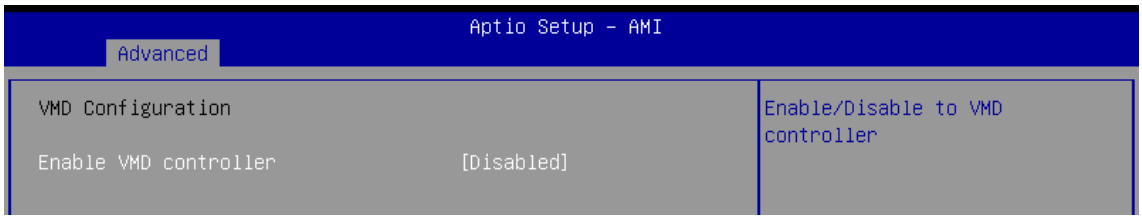

Figure 4 3-5 : VMD Configuration

Enable VMD controller

Enable/Disable to VMD controller

4.3.6 PCI Express Configuration (X)

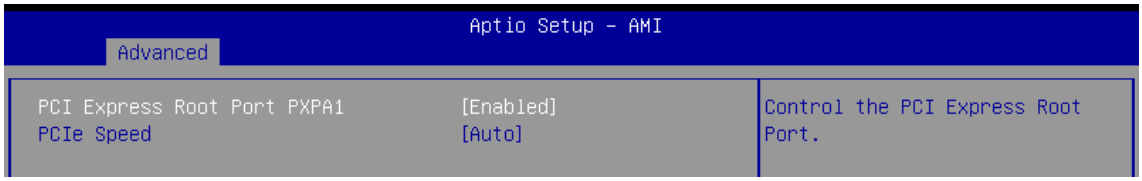

Figure 4 3-6 : PCI Express Configuration

PCI Express Root Port (X)

Control the PCI Express Root Port.

PCIe Speed

Configure PCIe Speed

4.3.7 PCH-IO Configuration

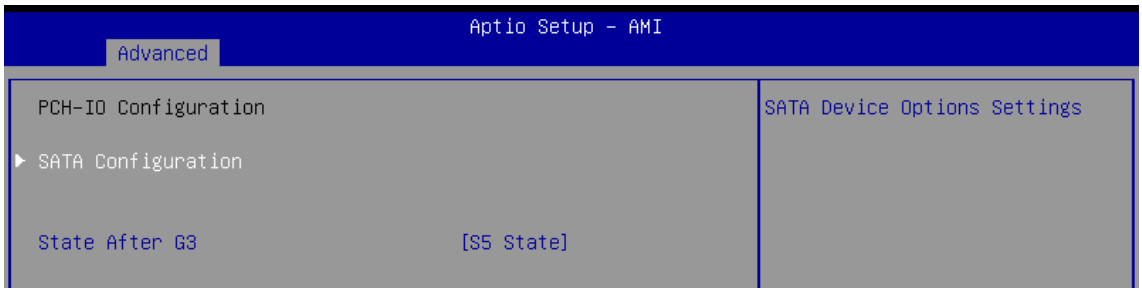

Figure 4-3-7 : PCH-IO Configuration

State After G3

Specify what state to go to when power is re-applied after a power failure (G3 state).

4.3.8 SATA Configuration

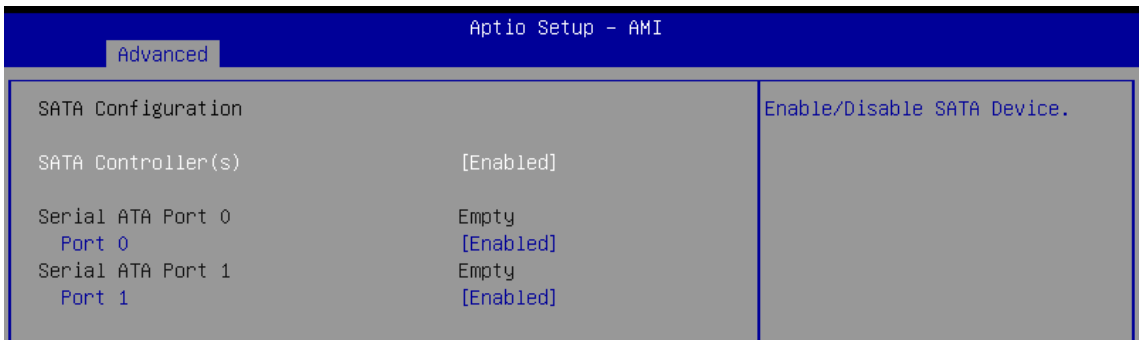

Figure 4-3-8 : SATA Configuration

SATA Controller(s)

Enable/Disable SATA Device.

Port (X)

Enable or Disable SATA Port

4.3.9 PCH-FW Configuration

Figure 4-3-9 : PCH-FW Configuration

TPM Device Selection

Selects TPM device: PTT or dTPM. PTT - Enables PTT in SkuMgr dTPM 1.2 - Disables PTT in SkuMgr Warning ! PTT/dTPM will be disabled and all data saved on it will be lost.

4.3.10 Trusted Computing

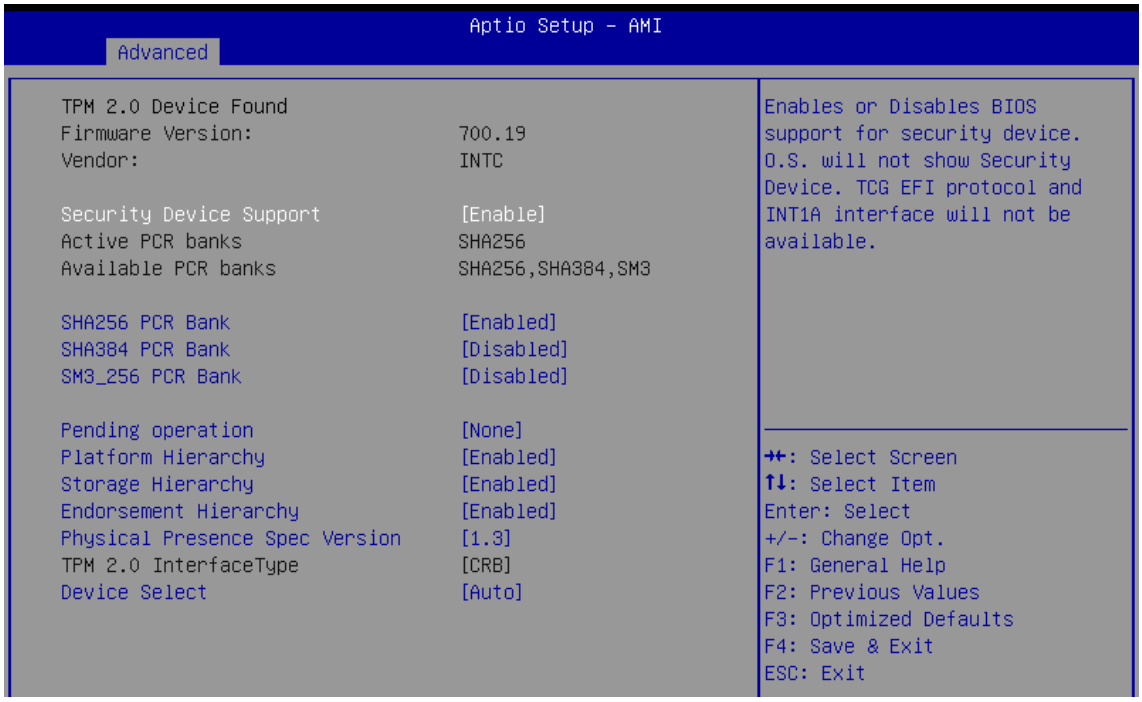

Figure 4-3-10 : Trusted Computing

Control the TPM device status and display related information if TPM chip is present.

4.3.11 ACPI Settings

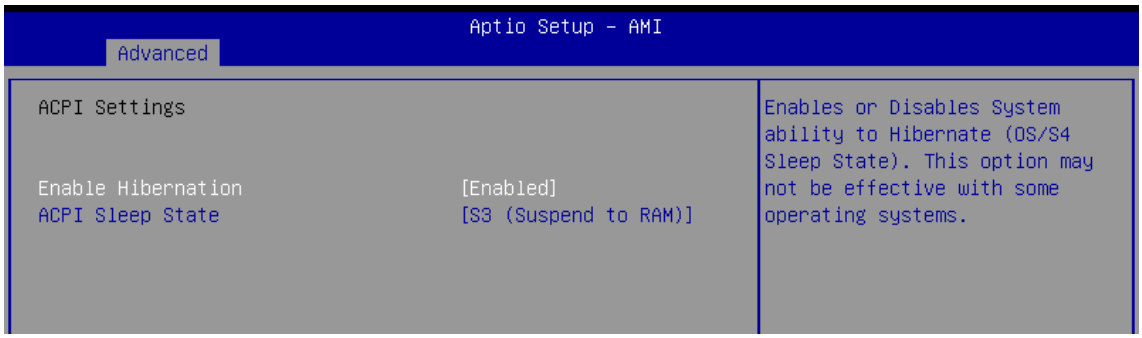

Figure 4 3-11 : ACPI Settings

Enable Hibernation

Enables or Disables System ability to Hibernate (OS/S4 Sleep State). This option may not be effective with some operating systems.

ACPI Sleep State

Select the highest ACPI sleep state the system will enter when the SUSPEND button is pressed.

4.3.12 Serial Port (X) Configuration

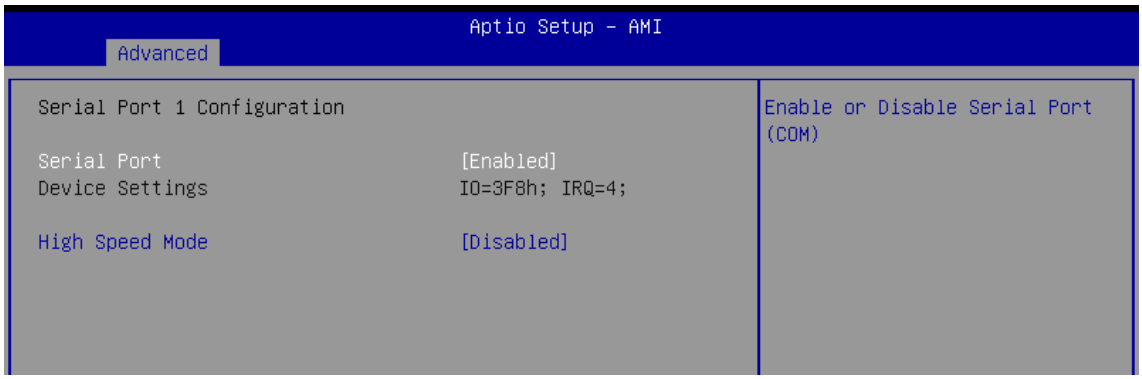

Figure 4-3-12 : Serial Port Configuration

Serial Port

Enable or Disable Serial Port (COM)

High Speed Mode (Only Serial Port 1)

Enable or Disable Serial Port High Speed.

Note: A device driver is required on OS for high speed serial port function.

4.3.13 Hardware Monitor

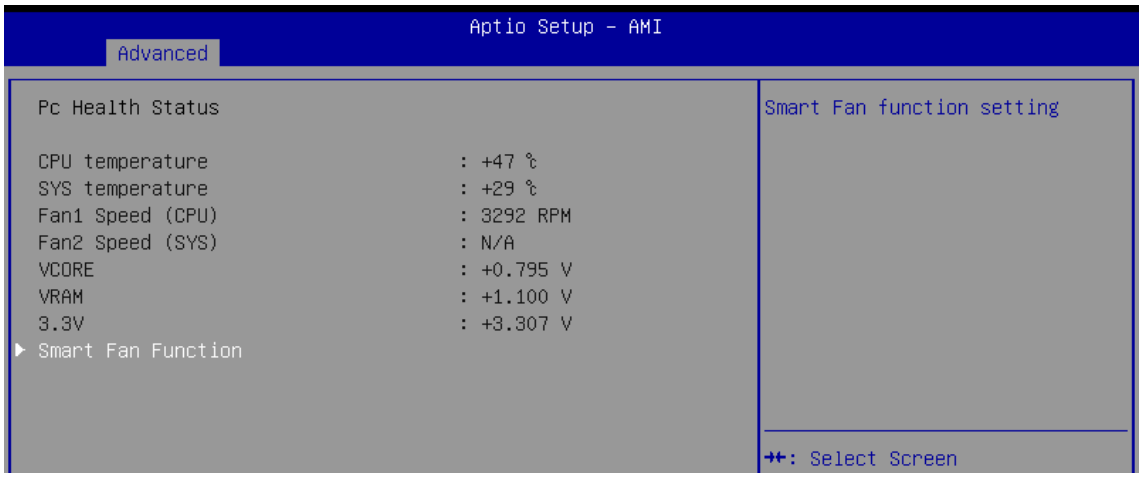

Figure 4-3-13 : Hardware Monitor

The IT8659 SIO features an enhanced hardware monitor providing thermal, fan speed, and system voltage status monitoring.

4.3.14 Smart Fan Function

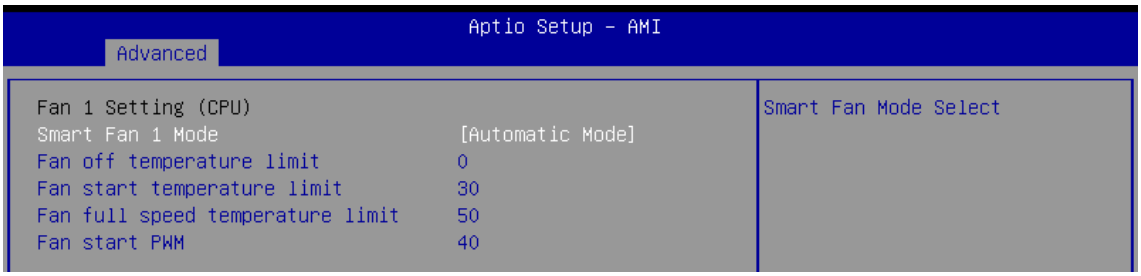

Figure 4-3-14 : Smart Fan Function

Smart Fan X Mode
Smart Fan Mode Select [Automatic Mode/ Software Mode]

Fan off temperature limit
Fan will off when temperature lower than this limit

Fan start temperature limit
Fan will work when temperature higher than this limit

Fan full speed temperature limit
Fan will full speed when temperature higher than this limit

Fan start PWM
Fan will start with this PWM value. [Range : 0-255]

Manual PWM Setting [Software Mode]
Fan will work with this Manual Duty Cycle Value [Range : 0-255]

4.3.15 Network Stack Configuration

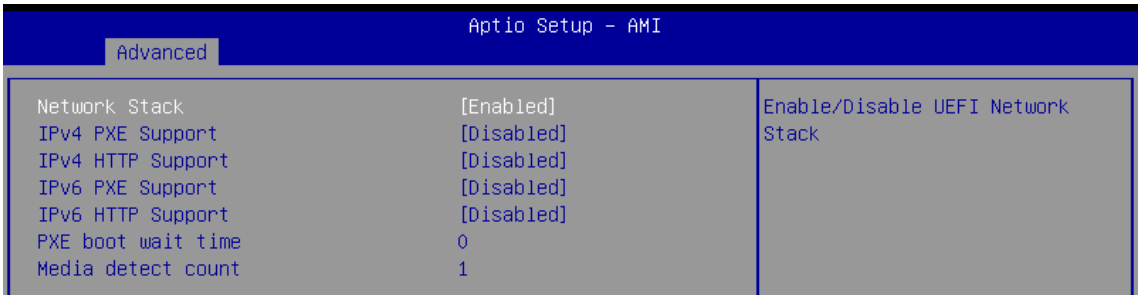

Figure 4-3-15 : Network Stack Configuration

Network Stack
Enable/Disable UEFI Network Stack.

IPv4 PXE Support
Enable/Disable IPv4 PXE boot support. If disabled, IPv4 PXE boot support will not be available.

IPv4 HTTP Support
Enable/Disable IPv4 HTTP boot support. If disabled, IPv4 HTTP boot support will not be available.

IPv6 PXE Support

Enable/Disable IPv6 PXE boot support. If disabled, IPv6 PXE boot support will not be available.

IPv6 HTTP Support

Enable/Disable IPv6 HTTP boot support. If disabled, IPv6 HTTP boot support will not be available.

PXE boot wait time

Wait time in seconds to press ESC key to abort the PXE boot. Use either +/- or numeric keys to set the value.

Media detect count

Number of times the presence of media will be checked. Use either +/- or numeric keys to set the value.

4.3.16 NVMe Configuration

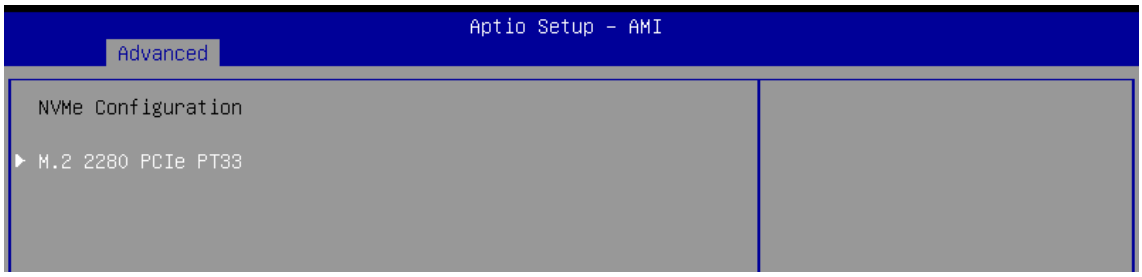

Figure 4-3-16 : NVMe Configuration

Display NVMe controller and Drive information.

4.3.17 Module Management

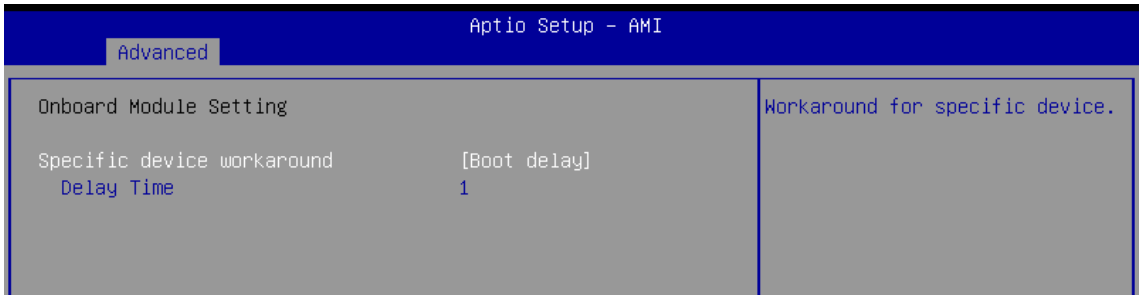

Figure 4-3-17 : Module Management

Specific device workaround

Workaround for specific device.

[Disabled / Boot delay / Warm reset / Cold reset]

Delay Time

0~255 (second).

4.4 Security Function

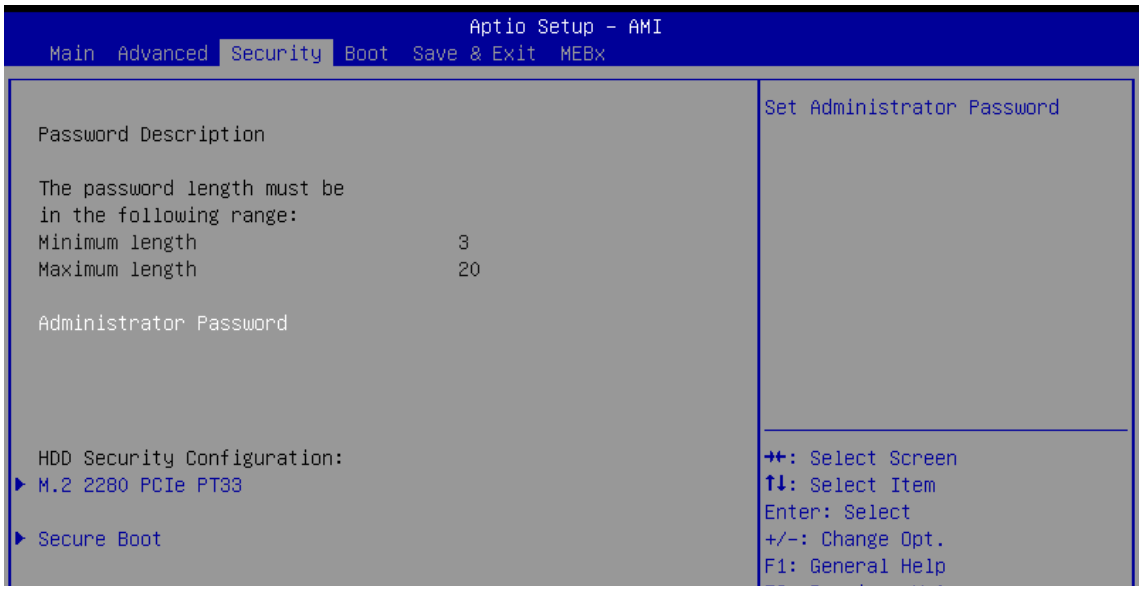

Figure 4-4 : Security Function

Administrator Password

Set administrator password.

HDD Security Configuration

HDD Security Configuration for selected drive

Secure Boot

Secure Boot configuration

4.5 Boot Function

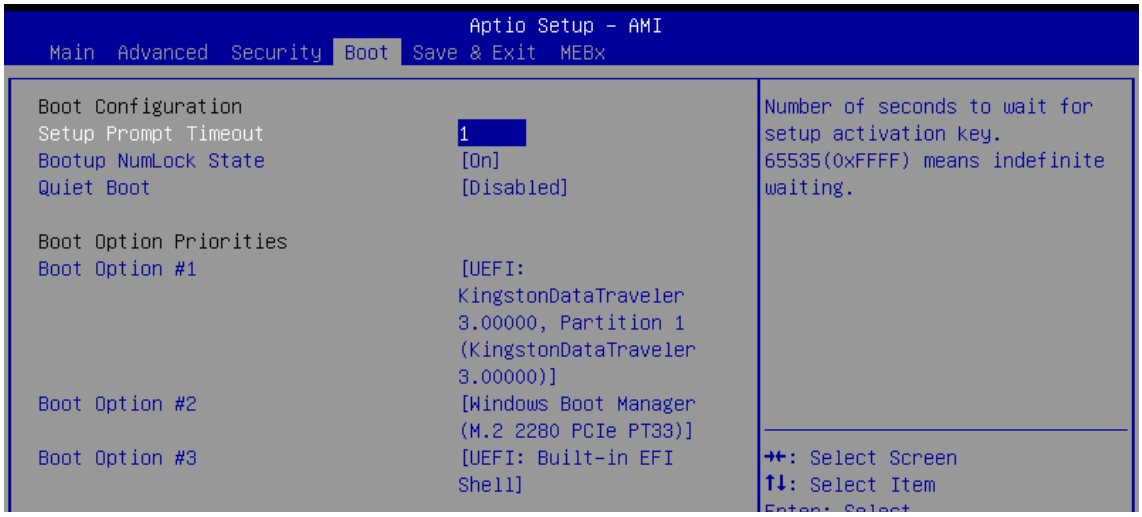

Figure 4-5 : Boot Function

Setup Prompt Timeout
Number of seconds to wait for setup activation key. 65535(0xFFFF) means indefinite waiting.

Bootup NumLock State
Select the keyboard NumLock state.

Quiet Boot
Enables or disables Quiet Boot option.

Boot Option Priorities
Sets the system boot order.

4.6 Save & Exit

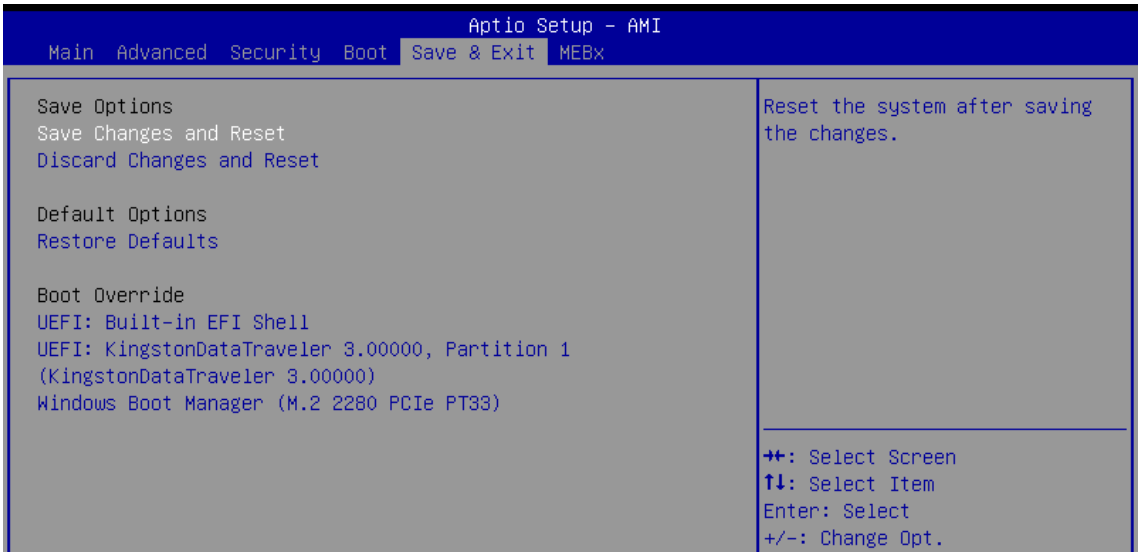

Figure 4-6 : Save & Exit

Save Changes and Reset
Reset the system after saving the changes.

Discard Changes and Reset
Reset system setup without saving any changes.

Restore Defaults
Restore/Load Default values for all the setup options.

A

APPENDIX A : Watchdog Function

A.1 Function Description

The TGS-1000 offers a watchdog timer.

A.2 Software Package contain

Distribution folders include x32 and x64 versions, use the batch file for driver installation.

There are included as fallowed :

Win10_32.bat, and Win10_64.bat :

Installation for driver, and

Uninstall_32.bat, and Uninstall_64.bat :

Uninstallation for driver

Run batch file as Administrator.

Make sure Windows version before installation.

Header folders include head file for software developer or System Integration.

Manual folders include API description.

Sample folders include sample program, driver library, and API library for Windows/Linux

Source folders include sample program source code that compile on Visual Studio 2008/ ubuntu16.04.

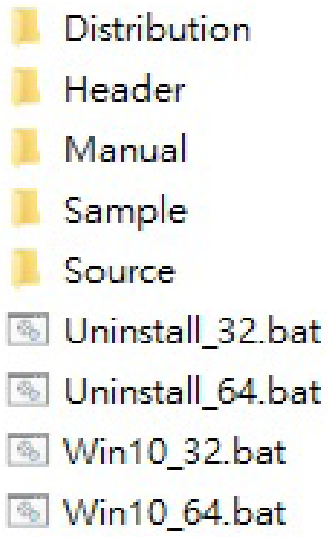

A.3 Sample

Execute demo tool.

Windows

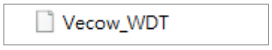

Linux

Sample, as shown below :

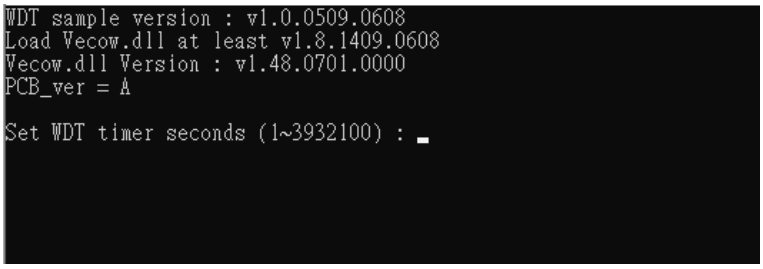

Vecow_WDT

B

APPENDIX B : Software Functions

BOOL get_WDT(DWORD *WDT)

Get watchdog timer setup.

WDT : watchdog timer setup.

Unit : second (Range: 0 ~ 65535 sec, 1093 ~ 65535 min (=65580 ~ 3932100 sec)).

Return :

TRUE (1) : Success.

FALSE (0) : Fail (Initial error, or call by pointer error, or hardware problem).

BOOL set_WDT(DWORD WDT)

Set watchdog timer setup.

WDT : watchdog timer setup.

Unit : second (Range: 0 ~ 65535 sec, 1093 ~ 65535 min (=65580 ~ 3932100 sec)).

Return :

TRUE (1) : Success.

FALSE (0) : Fail (Initial error, or setup 0, or hardware problem).

BOOL cancel_WDT()

Cancel watchdog timer.

Return :

TRUE (1) : Success.

FALSE (0) : Fail (Initial error or hardware problem).

APPENDIX C : RAID Functions

C.1.1 VMD Controller for RAID

Please set Enable VMD controller as Enabled on the BIOS menu.

Chipset → System Agent (SA) Configuration → VMD setup menu→ Enable VMD controller → Enabled → Save Changes and Reset.

1. Select System Agent (SA) Configuration.

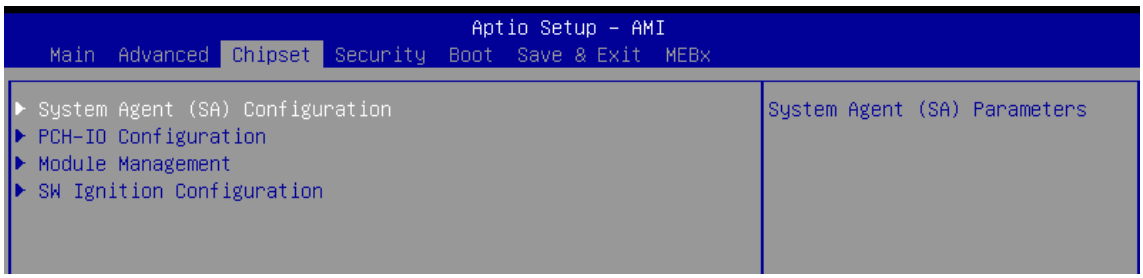

2. Select the VMD setup menu.

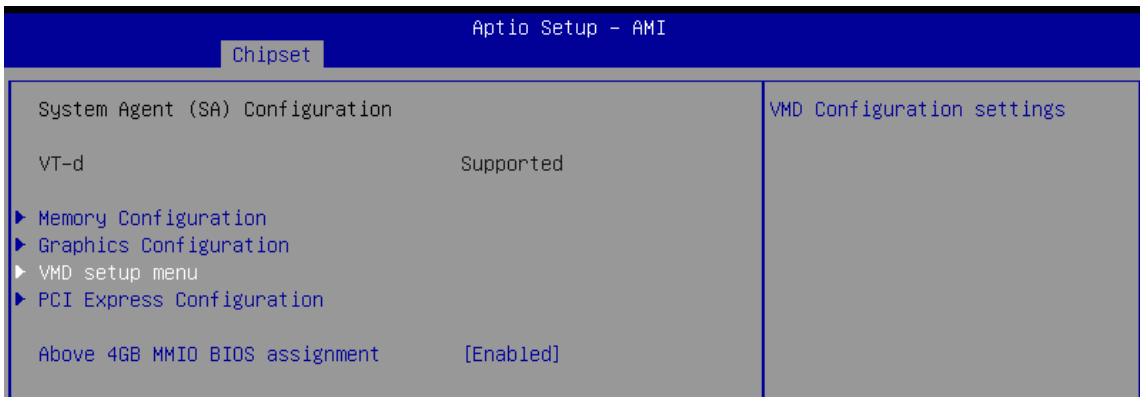

3. Enabled VMD controller. Then Save Changes and Reset.

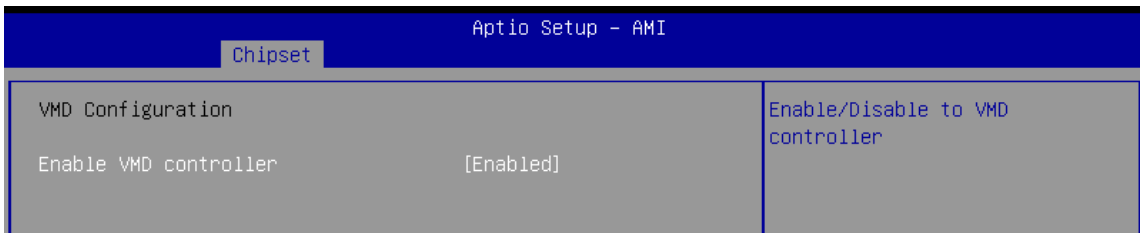

C.1.2 UEFI Mode for RAID

1. Into BIOS menu again, select Intel(R) Rapid Storage Technology on BIOS menu.

Advanced → Intel(R) Rapid Storage Technology.

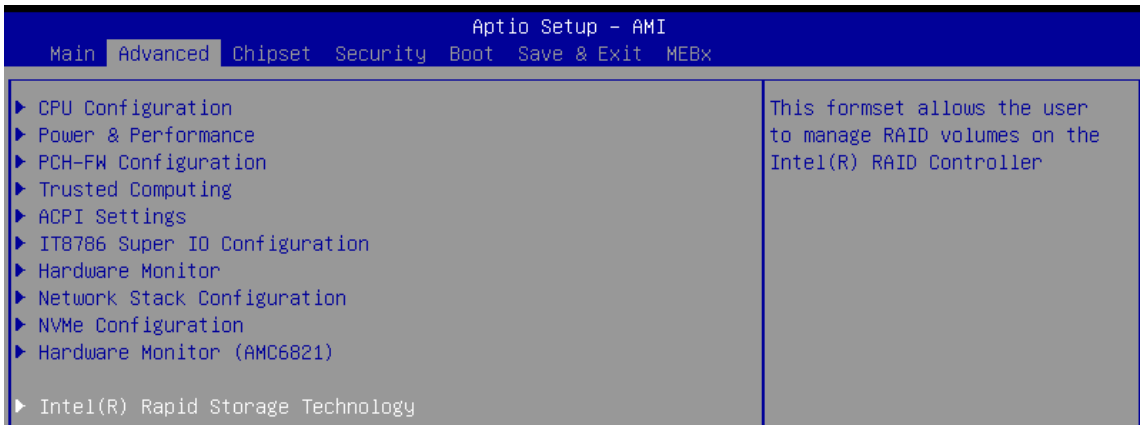

Note : Since each model differs, the following example screenshots are for reference only.)

2. Select Create RAID Volume on the BIOS menu.

This system features 1 M.2 Key M Socket (2280, PCIe 4.0 x4) and 1 M.2 Key M Socket (2242, PCIe 4.0 x4) support NVME storage. Please note. Storage device M.2 and SATA cannot be mixed to create a RAID Volume.

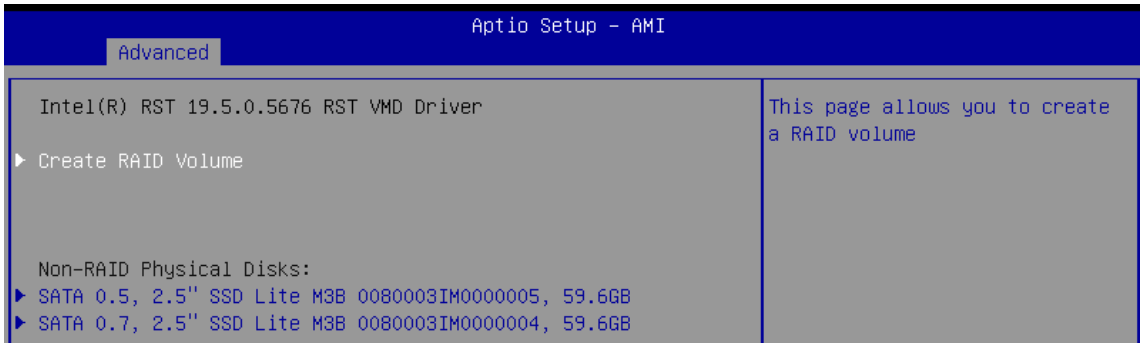

Note : Since each model differs, the following example screenshots are for reference only.)

3. Select disks to create RAID Volume, then Save Changes and Reset to install OS.

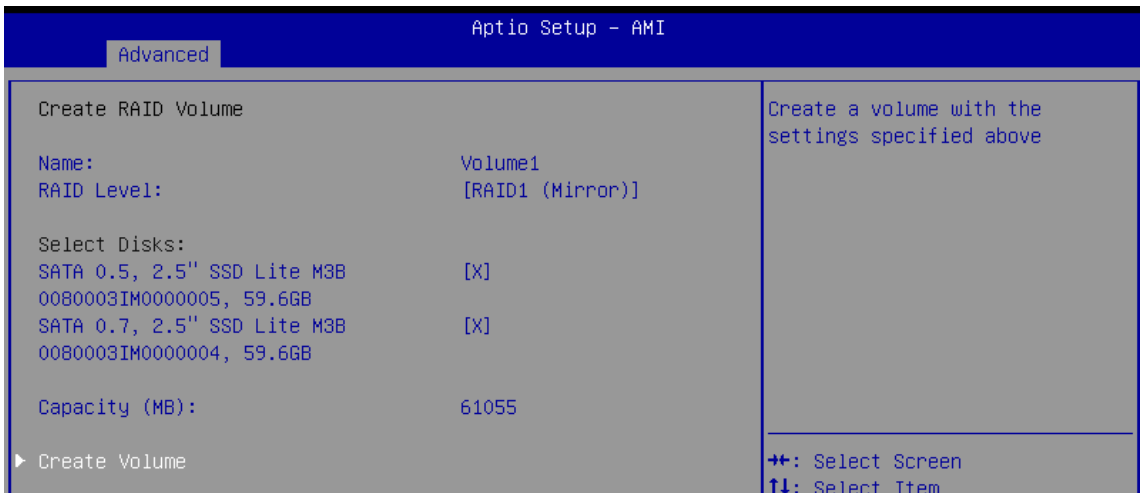

Note : Since each model differs, the following example screenshots are for reference only.)

C.2 OS Installation

We used SATA HDD for Windows 10 OS installation as an example.

Please note. After enabling the VMD controller, the IRST driver needs to be loaded first before it can read the hard disk.

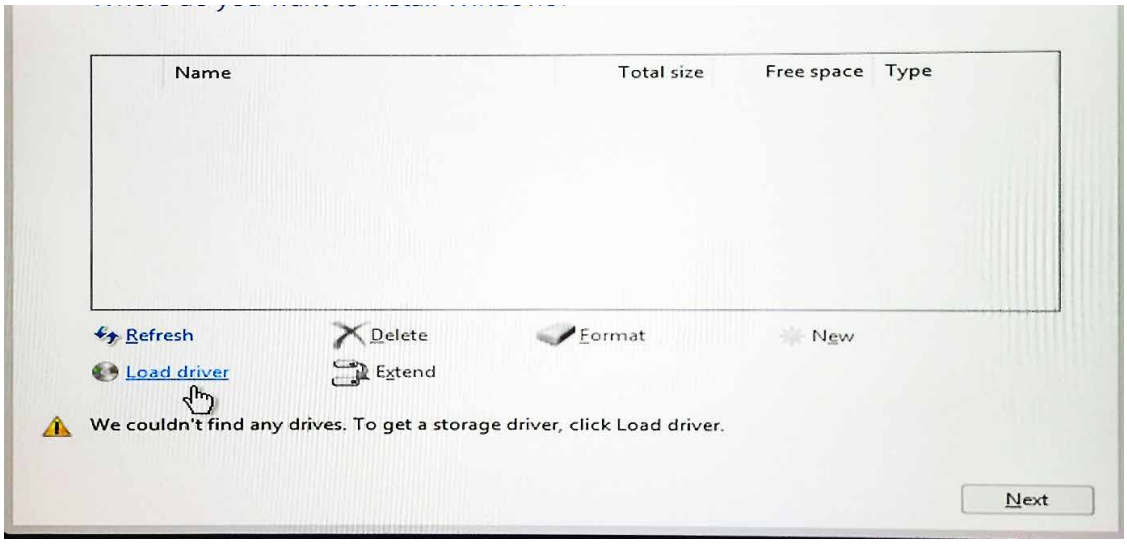

You can find the latest information and software directly from Intel's website.

http://www.intel.com/p/en_US/support/highlights/chpsts/imsm

Download the driver "SetupRST.exe" and decompress it.

You can refer to Intel's official teaching.

https://www.intel.com/content/www/us/en/support/articles/000094664/technologies/intel-rapid-storage-technology-intel-rst.html

Open Windows PowerShell or CMD and navigate to the location of the SetupRST.exe file.

Enter the following command to extract :

./SetupRST.exe -extractdrivers SetupRST_extracted.

After extraction, a "SetupRST_extracted " folder will be created, and then the folder will be put on the USB drive used for installing Windows.

Load the drivers and install them during the Windows installation.

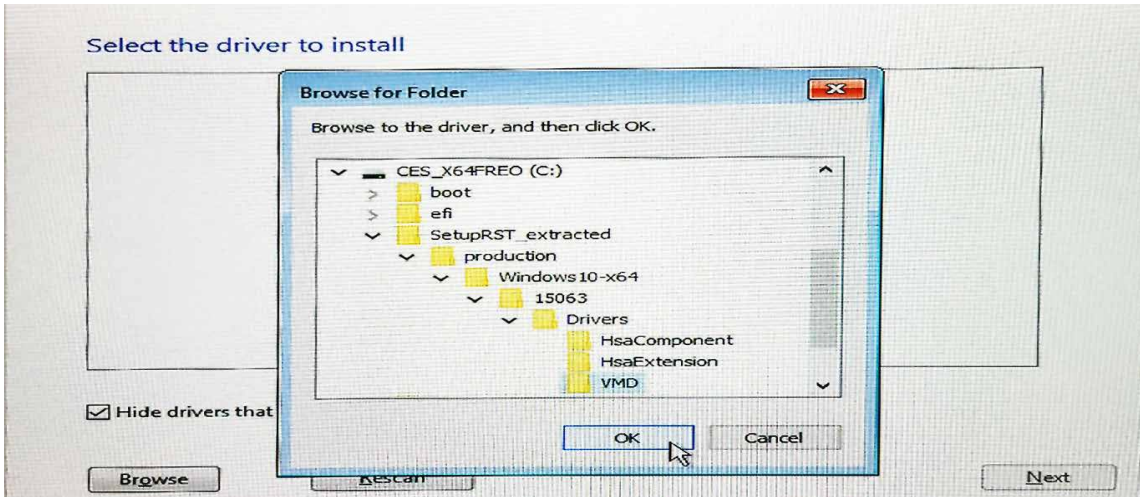

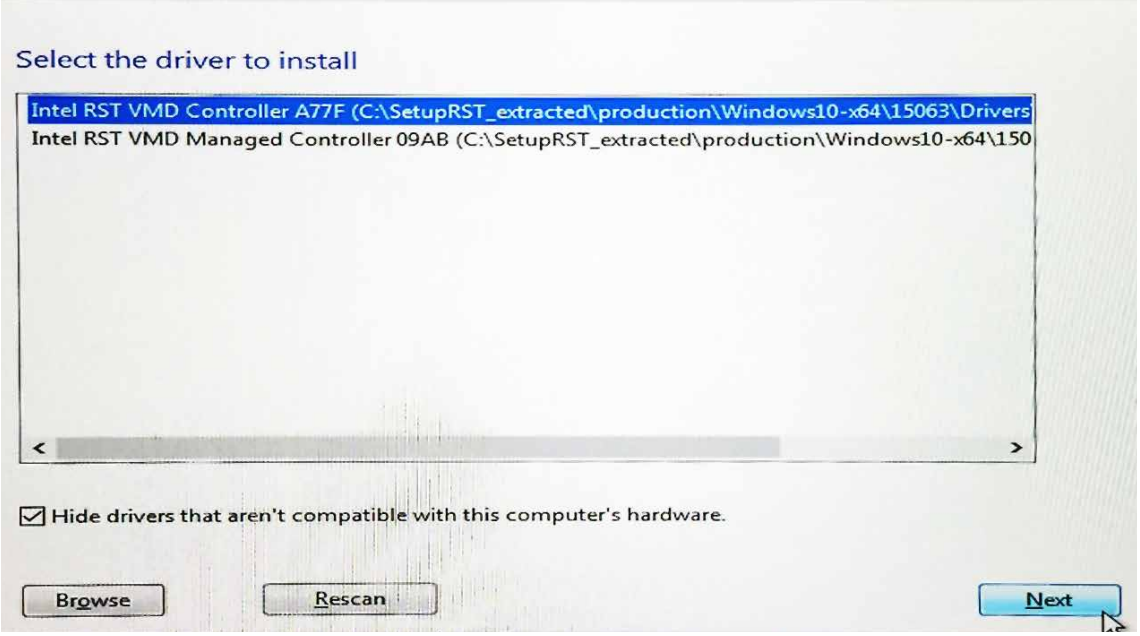

Then you can select the hard drive and install the OS.

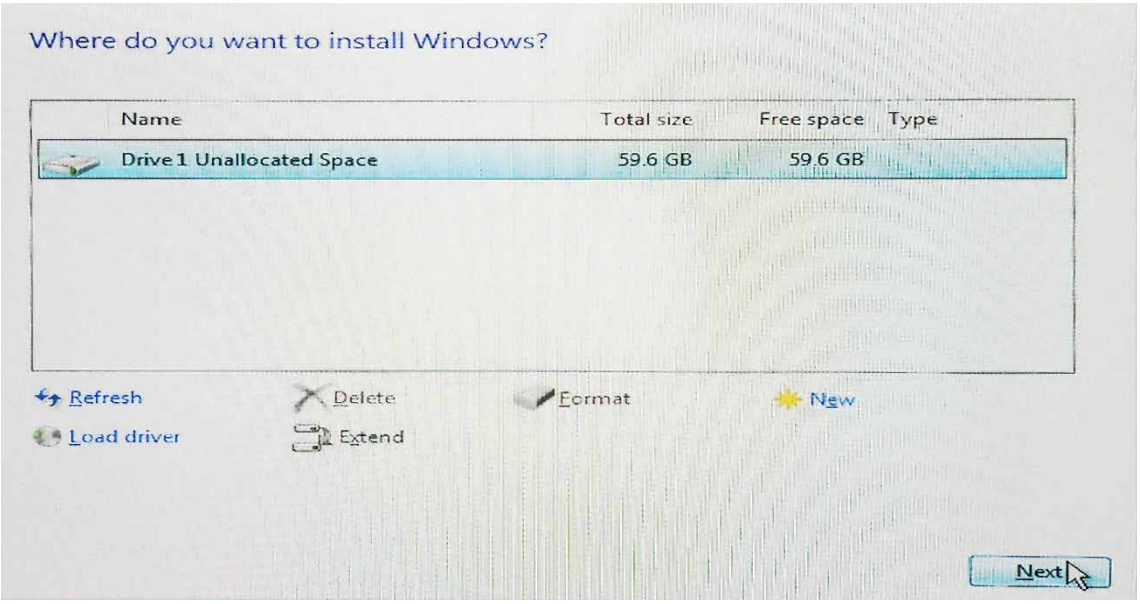

C.3 To Install All Device Drivers of the System

The instructions are as follows:

1. Install the Chipset driver
2. Install VGA driver
3. Install ME driver (if available)
4. Install Network driver
5. Install Audio driver
6. Install the NPU driver
7. Install the Intel SerialIO driver

C.4 To Install "Intel Rapid Storage Technology" driver

You can get the software from the driver CD.

Please note: Based on environmental sustainability and ESG principles, we no longer provide driver CDs with shipments and encourage customers to download the product drivers directly from our website.

Also, you can find the latest information and software directly from Intel's website.

http://www.intel.com/p/en_US/support/highlights/chpsts/imsm

Install "SetupRST.exe"

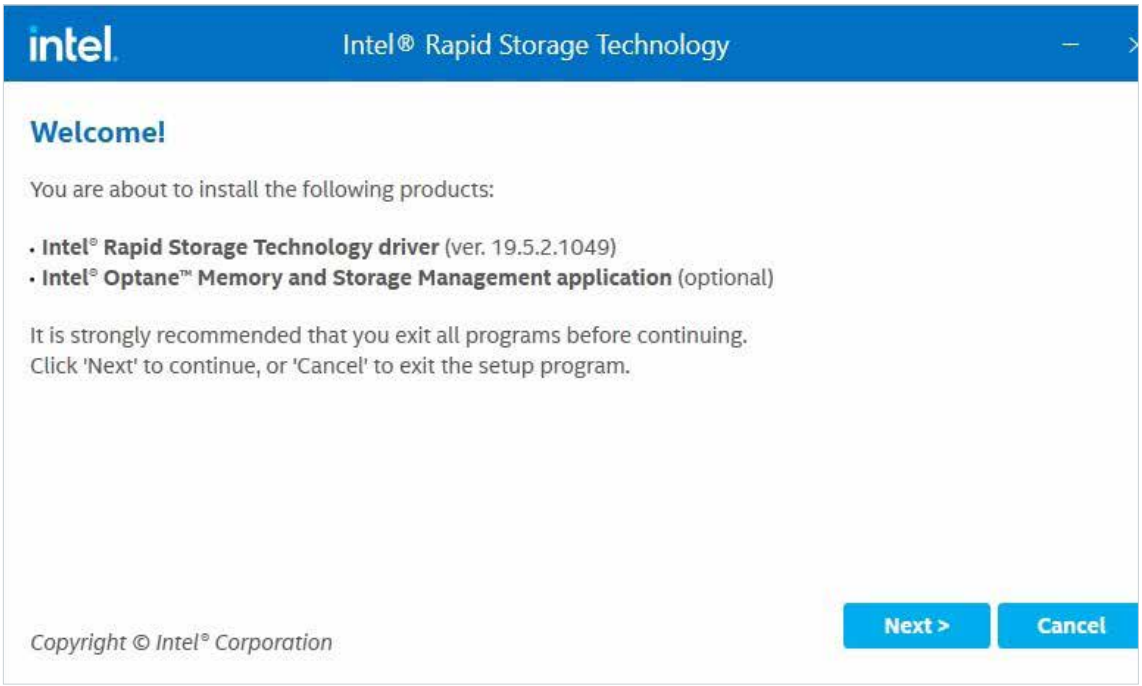

The RAID environment has been done when you completed the steps above.

At this point, the basic RAID Volume setup steps have concluded.

C.5 Manage RAID Volume on “Intel® Optane™ Memory and Storage Management” Software

You can download "Intel® Optane™ Memory and Storage Management" to manage and create RAID Volumes.

You can find it at Microsoft Store.

https://apps.microsoft.com/detail/9MZNG5HZWZ1T?activetab=pivot%3Aoverviewtab&hl=en-us&gl=US

After installation, the created RAID Volume will be displayed here.

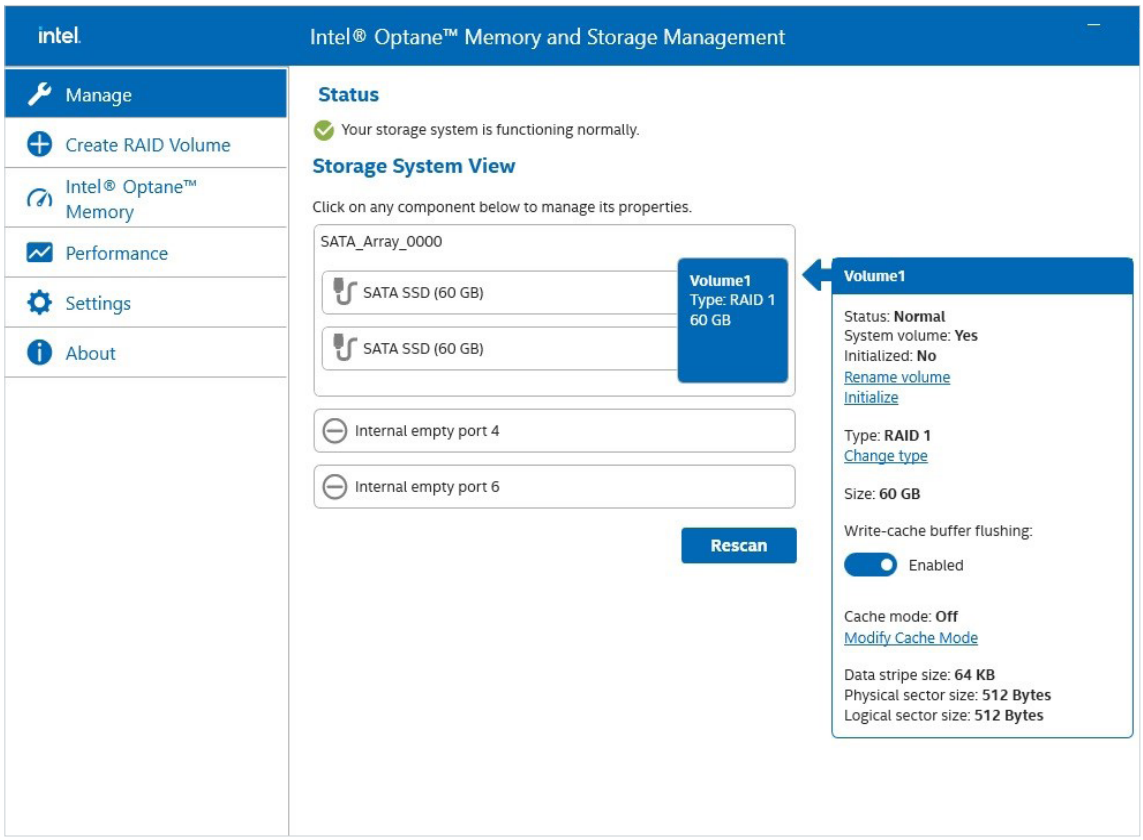

C.6 To Create RAID Volume on “Intel® Optane™ Memory and Storage Management” Software

You can connect additional SATA devices to build RAID Volumes (If available), and use "Intel® Optane™ Memory and Storage Management" Software for management.

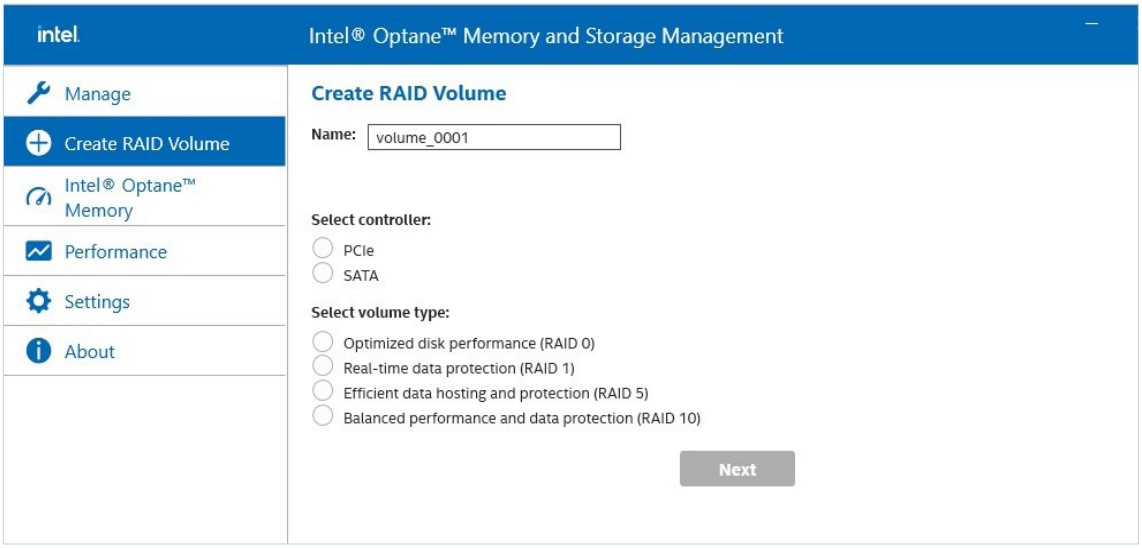

D

APPENDIX D : Power Consumption

Testing Board	TGS-1000_9100_9200
RAM:	32GB * 1
USB-1 : (USB 2.0)	USB Micsoft Wired Keyboard 600
USB-2 : (USB 2.0)	USB Mouse HP G1K28AA
USB-3 : (USB 3.0)	USB Flash ADATA 3.0 16GB
USB-4 : (USB 3.0)	USB Flash ADATA 3.0 16GB
USB-5 : (USB 3.2 Type C (5V/3A))	USB Flash Kingston 3.0 16GB
SATA 0	Transcend SATA SSD420 128GB
LAN 1 (i226)	2.5 Gbps
Graphics Output	DP Port1.4 : Up to 3840 x 2160 @60Hz by USB Type-C
Power Plan	Balance (Windows10 Power plan)
Power Source	Chroma 62006P-100-25
Test Program - 1	BurnInTest V10.2 Pro
Test Program - 2	FurMark 1.38.1.0 (1920 x 1080, 8X MSAA)

D.1 Intel® Core™ Ultra 5 135H 1.7GHz (18M Cache, up to 4.60 GHz)

Power on and boot to Win 10 (64-bit)

CPU	Power Input	Standby Mode		Power on and boot to Win 10 (64-bit)			
				Sleep Mode		Idle status CPU usage less 3%	
		Max Current	Max Consumption	Max Current	Max Consumption	Max Current	Max Consumption
Intel® Core™ Ultra 5 135H	12V	0.412A	04.944W	0.814A	09.768W	1.105A	13.26W
	24V	0.214A	05.136W	0.416A	09.984W	0.579A	13.896W

CPU	Power Input	Power on and boot to Win 10 (64-bit)			
		Run 100% CPU usage with 2D		Run 100% CPU usage with 3D	
		Max Current	Max Consumption	Max Current	Max Consumption
Intel® Core™ Ultra 5 135H	12V	3.495A	41.94W	3.603A	43.236W
	24V	1.777A	42.648W	1.818A	43.632W

D.2 Intel® Core™ Ultra 5 135H 1.7GHz (18M Cache, up to 4.60 GHz) with MXM RTX A2000 Ada

Power on and boot to Win 10 (64-bit)

CPU	Power Input	Standby Mode		Power on and boot to Win 10 (64-bit)			
				Sleep Mode		Idle status CPU usage less 3%	
		Max Current	Max Consumption	Max Current	Max Consumption	Max Current	Max Consumption
Intel® Core™ Ultra 5 135H	12V	0.398A	04.776W	2.320A	27.84W	2.659A	31.908W
	24V	0.214A	05.136W	1.219A	29.256W	1.349A	34.536W

CPU	Power Input	Power on and boot to Win 10 (64-bit)			
		Run 100% CPU usage with 2D		Run 100% CPU usage with Furmark	
		Max Current	Max Consumption	Max Current	Max Consumption
Intel® Core™ Ultra 5 135H	12V	5.260A	63.12W	9.273A	111.276W
	24V	2.705A	64.92W	4.701A	112.824W

E

APPENDIX E : Supported Memory & Storage List

E.1 Test Item

Testing Board	TGS-1000
Memory Test	MemTest86 V11.0
BurnIn Test	BurnInTest Pro V10.2 (build 1011)

Tset Item

Channel	Memory Test	OS internal info	Hibernate	Reboot
*1(DIMM 1)	PASS	PASS	PASS	PASS
*1(DIMM 2)	PASS	PASS	PASS	PASS

E.2 Supported Non-ECC Memory List

Brand	Info	Test Temp. (Celsius)
Transcend 8G DDR5-5600 SO-DIMM	TS1GSA64V6G	25ºC
Kingston 16G DDR5-5600 SO-DIMM	M425RGA3PB0-CWM0D	25ºC
SLLINK 32G DDR5 4800 SO-DIMM	KSM56T46BS8KM-16HA	25ºC
SMART 32G DDR5 4800 SO-DIMM	M5S0-BG2OCZQ-H03	25ºC

E.3 Supported ECC Memory List

Brand	Info	Test Temp. (Celsius)
Transcend 32G DDR5-5600 ECC SO-DIMM	TS4GSA72V6E	25ºC

E.4 Supported Storage List

Type	Vendor	Model	Capacity
M.2 PCIe SSD	Innodisk	4TG2-P DGM28-C12DP1KCAEF-H03 G4X4	512GB
		3TE6 DEM28-C12DD1KCCQF-H03 G3X2	512GB
	Transcend	TS512GMTE720T G4X4	512GB
		TS512GMTE460T	512GB

F

APPENDIX F : Selection and Use Guide of TGS-100

1. TGS-101 (GPIO) and TGS-102 (DIO) cannot be jointly used and can only be installed at the first expansion layer.

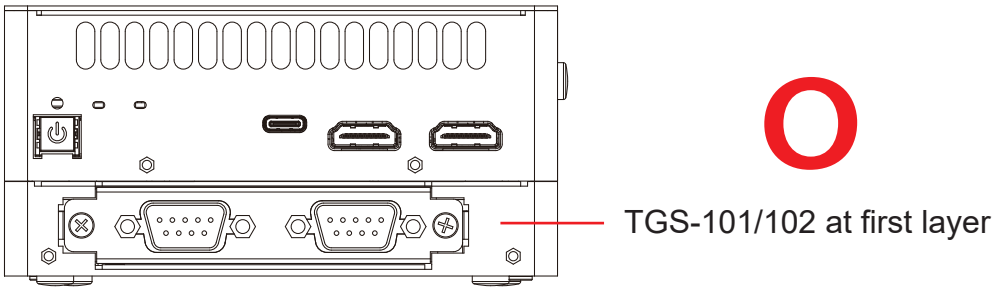

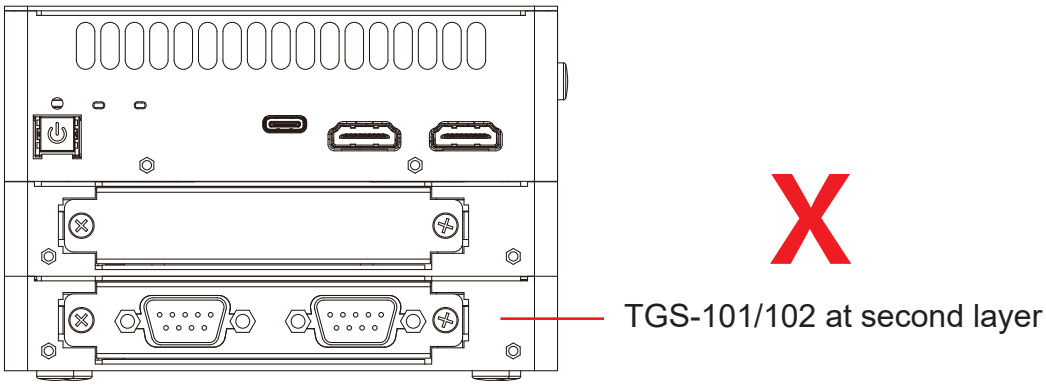

2. For TGS-1000, can support up to 4 expansion layer.

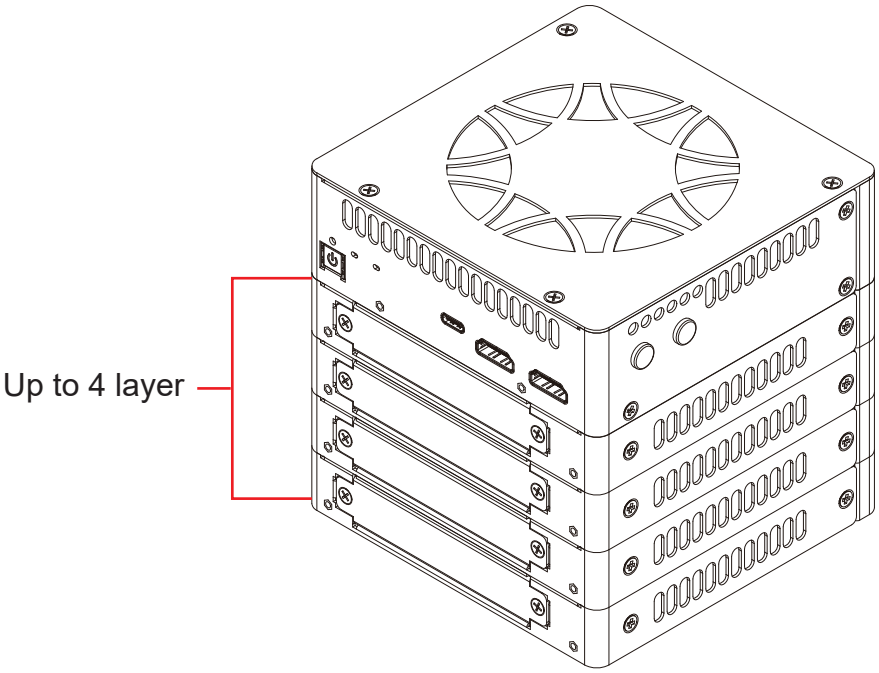

3. For TGS-1500, can support up to 2 additional expansion layer. (excludes MXM layer).

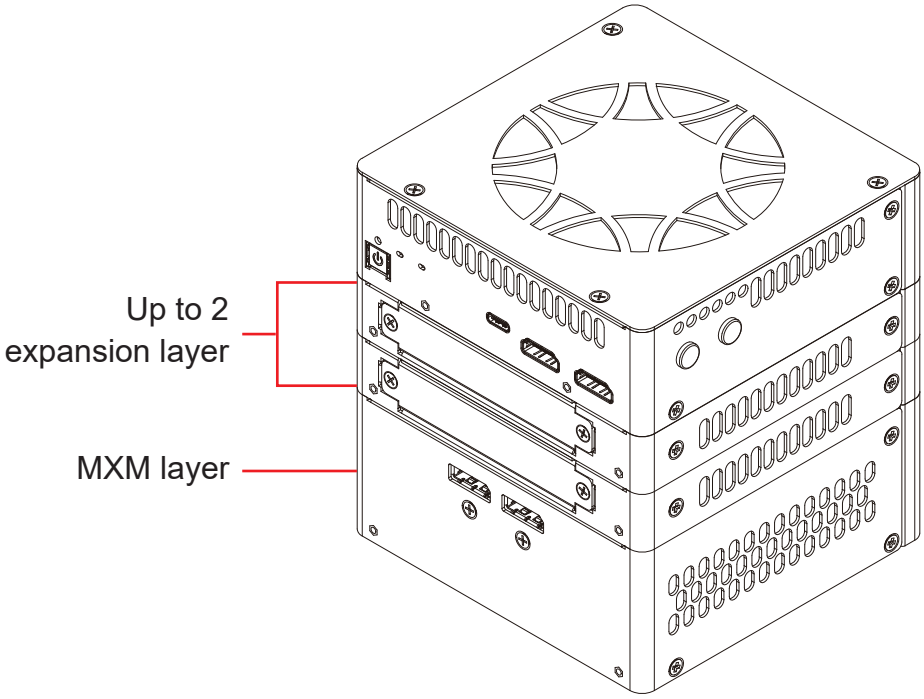

For further support information, please visit www.vecow.com
This document is released for reference purpose only.
All product offerings and specifications are subject to change without prior notice.
No part of this publication may be reproduced in any form or by any means, electric, photocopying, or recording, without prior authorization from the publisher.
The rights of all the brand names, product names, and trademarks belong to their respective owners.
© Vecow Co., Ltd. 2025. All rights reserved.