*ZED Box Mini

Orin™ Nano 4GB
Orin™ Nano 8GB
Orin™ NX 8GB
Orin™ NX 16GB

Embedded Computer Overview

The ZED Box Mini is a compact, high-performance embedded computing system built on NVIDIA Jetson Orin™ modules.

Engineered specifically for AI-driven vision-based applications, the ZED Box Mini provides essential I/O interfaces, including support for GMSL2 connectivity.

Its design prioritizes scalability and affordability, making it the ideal solution for large-scale deployments of AI-powered robotics and vision-based systems.

Whether you're developing autonomous robots, smart cameras, or edge AI systems, the ZED Box Mini offers the performance and flexibility needed to bring your projects to life.

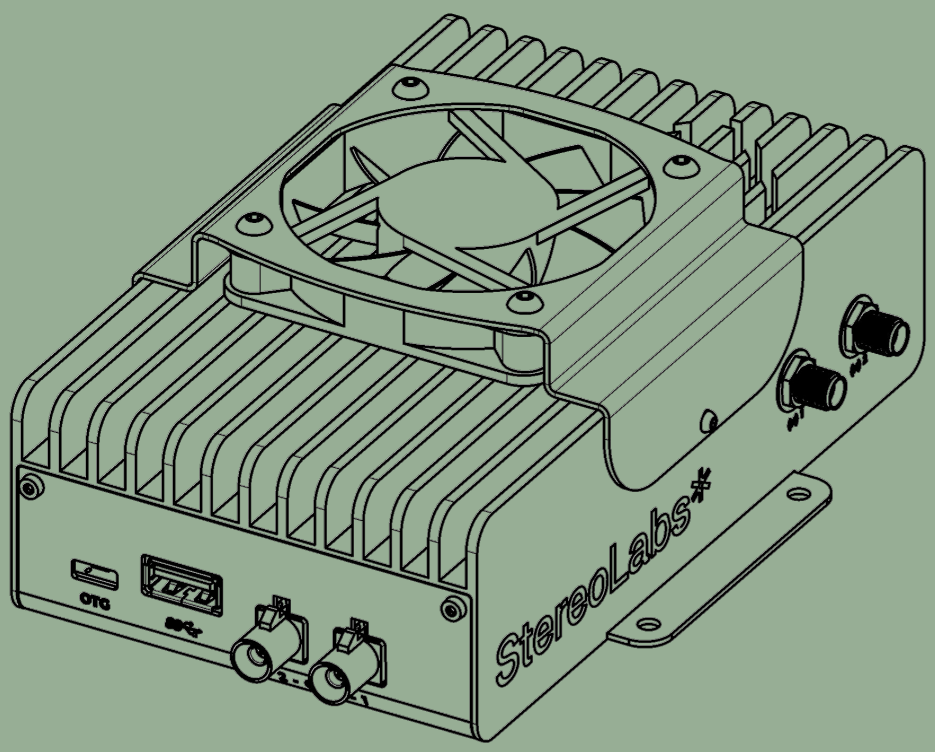

*ZED Box Mini Overview

Optimized for GMSL2 camera-based applications

The ZED Box Mini supports seamless connectivity for up to two ZED X cameras via GMSL2, monocular and stereo cameras. Designed to maximize the potential of the ZED camera series, the ZED Box Mini is compatible with all current Stereolabs camera models with drivers available for various configurations, delivering unmatched integration.

Designed for Advanced AI Computing

Whether you're developing autonomous robots, smart cameras, or edge AI systems, the ZED Box Mini offers the performance and flexibility needed to bring your AI applications to life.

The ZED Box Mini natively supports the ZED SDK, delivering unmatched performance for vision-based AI applications.

Compact and cost-effective

The ZED Box Mini combines a compact design with cost-effectiveness, making it ideal for deploying AI-powered systems at scale. Its small form factor ensures easy integration into space-constrained environments, while its affordability enables large deployments without compromising performance.

Ready-to-use out of the box

The ZED Box Mini comes set up with all the necessary components for development, such as the latest NVIDIA JetPack, and features an integrated mounting plate, making it very easy to attach to any support.

Options include Wifi and various NVIDIA Jetson Orin™ modules.

ZED Box Mini | Available Models

Model	ZED Box Mini Nano 4GB	ZED Box Mini Nano 8GB	ZED Box Mini NX 8GB	ZED Box Mini NX 16GB
AI Module	Jetson Orin™ Nano 4GB	Jetson Orin™ Nano 8GB	Jetson Orin™ NX 8GB	Jetson Orin™ NX 16GB
AI Performance	20 TOPs	40 TOPS	70 TOPs	100 TOPs
Ideal camera configurations	1x ZED X GS or 2x ZED X One GS	2x ZED X GS / ZED X One GS	2x ZED X GS / ZED X One GS	2x ZED X GS / ZED X One GS
Compute capabilities	Medium computer vision applications for single stereo camera setups	Medium computer vision applications for dual stereo camera setups	Advanced computer vision applications for dual stereo camera setups	Cutting-Edge computer vision applications for dual stereo camera setups
Performance *	Single Stereo Camera Depth @30fps with 80% GPU load	Single Stereo Camera Depth @30fps with 36% GPU load Dual Stereo Camera Depth @30fps with 64% GPU load	Single Stereo Camera Depth @30fps with 28% GPU load Dual Stereo Camera Depth @30fps with 55% GPU load	Single Stereo Camera Depth @30fps with 23% GPU load Dual Stereo Camera Depth @30fps with 47% GPU load

* ZED X GS cameras with ZED SDK5.0 NEURAL LIGHT Model with Jetson™ in a non-MAXN SUPER mode with 1920x1200 image resolution

*ZED Box Mini Technical Specifications

Model	ZED Box Mini Nano 4GB	ZED Box Mini Nano 8GB	ZED Box Mini NX 8GB	ZED Box Mini NX 16GB
Reference	ZBX-420010 (No WiFi) ZBX-420110 (With WiFi)	ZBX-430010 (No WiFi) ZBX-430110 (With WiFi)	ZBX-440010 (No WiFi) ZBX-440110 (With WiFi)	ZBX-450010 (No WiFi) ZBX-450110 (With WiFi)
AI Module	Jetson Orin™ Nano 4GB	Jetson Orin™ Nano 8GB	Jetson Orin™ NX 8GB	Jetson Orin™ NX 16GB
AI Performance	20 TOPs	40 TOPS	70 TOPs	100 TOPs
Jetson™ Power Mode	10W | 25W	15W | 25W	10W | 15W | 20W | 40W	10W | 15W | 25W | 40W
Video Encode	Not yet supported.	Not yet supported.	1x 4K @ 60 (H.265) 3x 4K @ 30 (H.265) 6x 1080p @ 60 (H.265) 12x 1080p @ 30 (H.265)	1x 4K @ 60 (H.265) 3x 4K @ 30 (H.265) 6x 1080p @ 60 (H.265) 12x 1080p @ 30 (H.265)
Video Decode	1x 4K @ 60 (H.265) 2x 4K @ 30 (H.265) 5x 1080p @ 60 (H.265) 11x 1080p @ 30 (H.265)	1x 4K @ 60 (H.265) 2x 4K @ 30 (H.265) 5x 1080p @ 60 (H.265) 11x 1080p @ 30 (H.265)	1x 8K @ 30 (H.265) 2x 4K @ 60 (H.265) 4x 4K @ 30 (H.265) 9x 1080p @ 60 (H.265) 18x 1080p @ 30 (H.265)	1x 8K @ 30 (H.265) 2x 4K @ 60 (H.265) 4x 4K @ 30 (H.265) 9x 1080p @ 60 (H.265) 18x 1080p @ 30 (H.265)
Display	1x HDMI 1.4	1x HDMI 1.4	1x HDMI 2.1	1x HDMI 2.1

Interfaces and Storage

Cameras Inputs	2x GMSL2 FAKRA-Z 1x USB3.0 Type-A
Ethernet	1x 10/100/1000 Base-T Ethernet RJ45
Debug	1x Micro USB2.0 Type-B for system flashing & OTG
Camera Sync.	1x GMSL2 Camera Sync. Trigger Input 1x GMSL2 Camera Sync. Trigger Output
Fan	1x 12V Fan Entry
Misc. Connector	1x 10 pins Header Connector including : 1x CAN PHY, 1x UART, 2x GPIOs, 1x 5V, 1x 3.3V, 2x GND
Storage	NVMe SSD 256GB mounted on M.2 Key-M 2242 socket
Wifi (Optional)	WiFi 6 with 1x Intel AX210 Module mounted on M.2 Key-E 2230 socket and 2x 2.4/5GHz WiFi antennas

Power

Power Input	DC 10.5V to 13.5V - 60W max
Power Interface	Screwable Terminal block connector TBP01P1W-508-02GR

Mechanical

Weight	600g (1.32lbs)
Dimensions	152.8× 103.8× 41.5 mm (6.02 × 4.09 × 1.63") LxWxH
Case	Black Anodized Aluminum Heatsink. White Powder-Coated Bent Steel for the lower part of the product.
Operating Temp.	-20°C to +50°C (-4°F to 122°F). Storage from -40°C to +85°C (-40°F to 185°F).
Humidity	10% to 90% (Non-Condensing)
Certifications	CE & FCC
Warranty	2-year warranty

*ZED Box Mini I/O Interfaces

Micro USB2.0 Type-B | USB3.0 Type-A | GMSL2 FAKRA-Z Connectors

GPIO Connector | 12V Fan Connector | HDMI Type-A | GMSL2 SYNC-IN | GMSL2 SYNC-OUT

Gigabit Ethernet Port | Reset Button | Power LED | Recovery Mode Button | Power Input

WiFi Female SMA Connectors *

* WiFi Module is included with compatible versions

*ZED Box Mini Pinout Table

Power Input Connector

The ZED Box Mini series supports a nominal voltage of 12V (+/- 1.5V) via its dedicated Terminal Block connector.

Pinout	
Pin Number	**Description**
1	DC IN 12V
2	GND

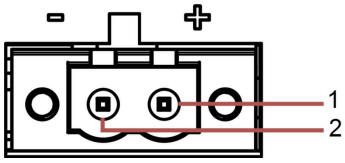

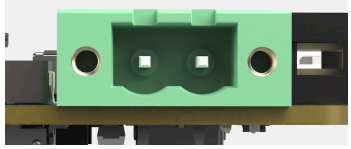

SYNC - IN Connector

The synchronization-input connector is used as a frame-sync trigger input in order to synchronize image acquisition on multiple GMSL2 cameras connected to different ZED Box Mini. The connector is a Same Sky 3-pin Terminal Block, that mates with TBP02P1W-381-03BE.

Pinout	
Pin Number	**Description**
1	TRIG_INFO
2	GND
3	TRIG_IN

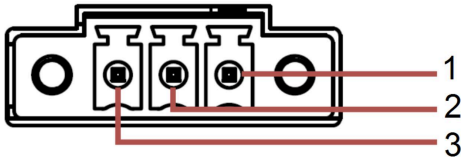

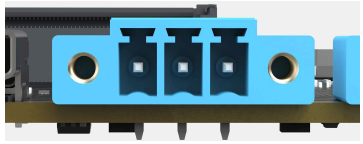

SYNC - OUT Connector

The synchronization-output connector is used as a frame-sync trigger input in order to synchronize image acquisition on multiple GMSL2 cameras connected to different ZED Box Mini. The connector is a Same Sky 3-pin Terminal Block, that mates with TBP02P1W-381-03BE.

Pinout	
Pin Number	**Description**
1	GND
2	GND
3	TRIG_OUT

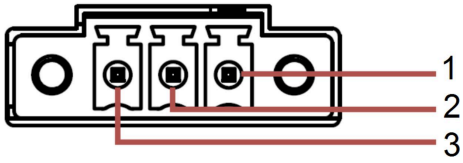

FAN Connector

The ZED Box Mini includes a dedicated 12V-compatible fan connector to support active cooling solutions.

Pinout	
Pin Number	**Description**
1	FAN_12V
2	GND

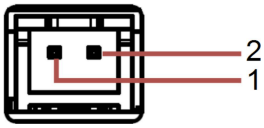

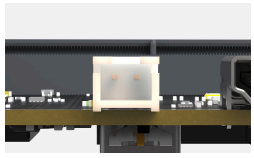

*ZED Box Mini Pinout Table

MISCELLANEOUS (GPIO) Connector

The Miscellaneous connector, labeled GPIO on the ZED Box Mini, is mainly used for debug and testing purposes.

Pinout	
Pin Number	**Description**
1	VCC_5V
2	GND
3	GPIO_11
4	GPIO_12
5	CAN_RX
6	CAN_TX
7	VCC_3V3
8	GND
9	UART_RXD
10	UART_TXD

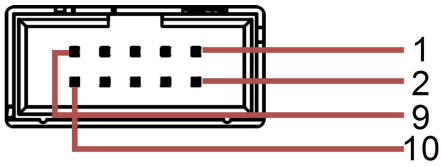

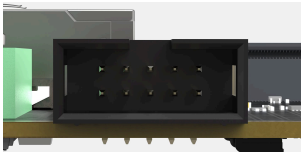

Standard Connectors

Connector	Description	Pinout
FAKRA-Z GMSL2	The two separated FAKRA-Z connectors each one for connected a GMSL2 camera through a single coaxial cable.	Please refer to the FAKRA-Z standards.
USB3.0 Type-A	The USB3.0 Type-A connector supports up to 5Gbps data rate. It is compliant with the requirements of Super Speed (SS), High Speed (HS), Full Speed (FS) and Low Speed (LS).	Please refer to the USB3.0 Type-A standards.
Micro-USB2.0 Type-B (OTG)	The Micro USB2.0 Type-B connector can be used for OTG functions, or paired with the use of the Recovery button to flash a new Image on the device. In non-recovery mode, this connector provides a serial output that can be used to access the device through a serial console.	Please refer to the USB3.0 Type-A standards.
Ethernet (LAN)	The ZED Box Mini series comes with one Gigabit Ethernet LAN port supporting 10/100/1000 BASE-T with a RJ45 connector.	Please refer to RJ45 Ethernet standards for 10/100/1000 BASE-T.
HDMI	The ZED Box Mini features an HDMI connector to display video with a maximum resolution of 3840×2160 @60Hz.	Please refer to the HDMI standards.

*ZED Box Mini
Technical Drawings

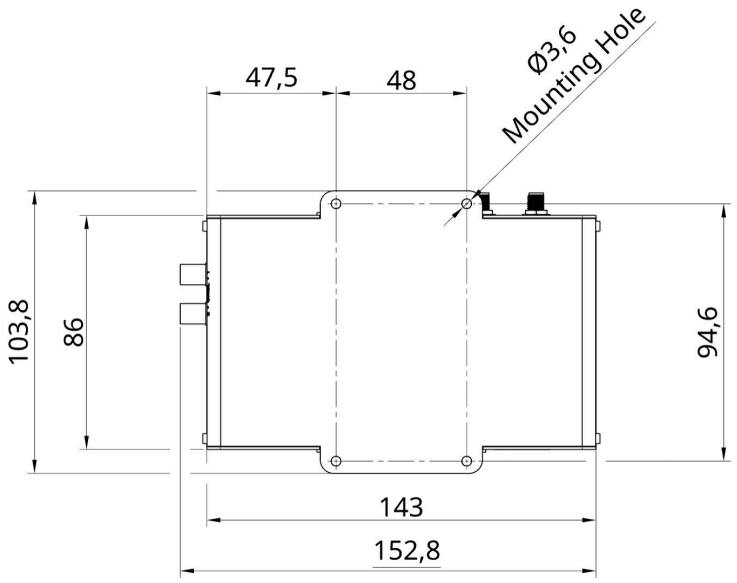

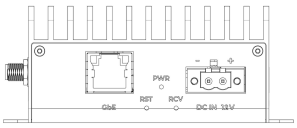

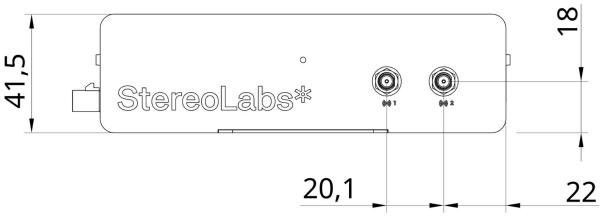

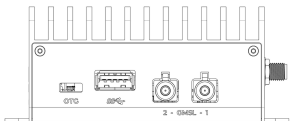

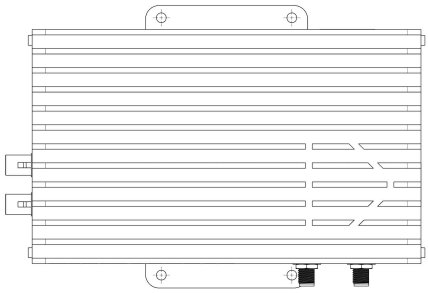

Isometric view

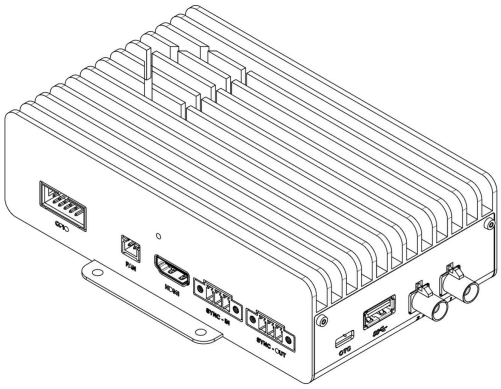

Rear view

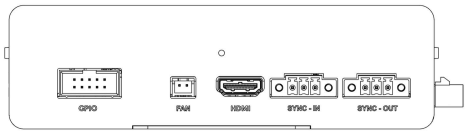

*ZED Box Mini
Technical Drawings

With Fan

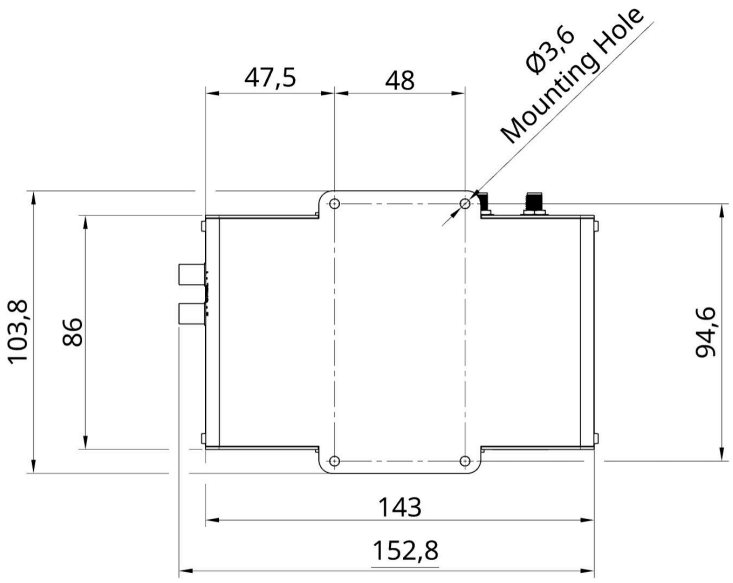

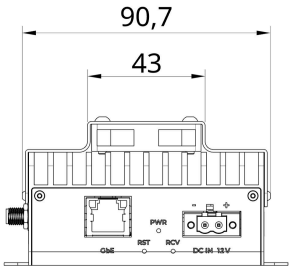

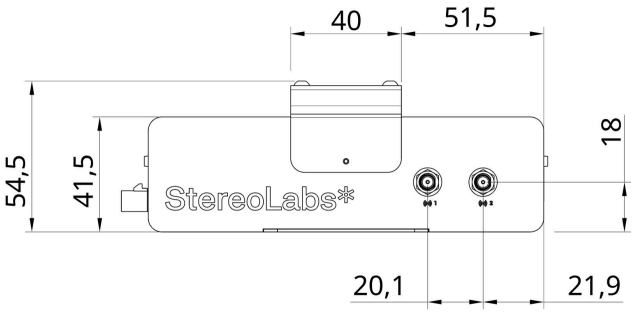

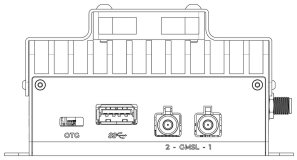

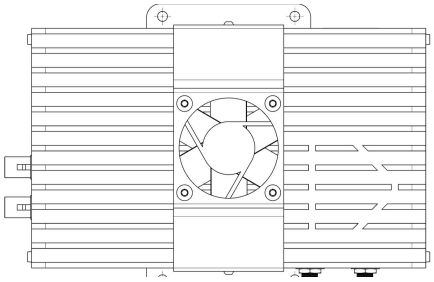

Isometric view

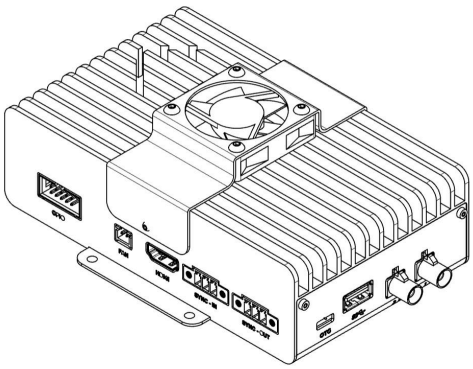

Rear view

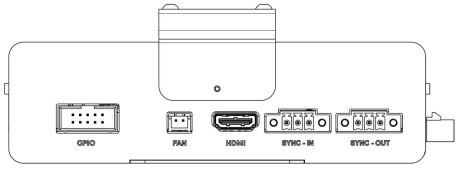

*ZED Box Mini
Technical Drawings

Fan Installation

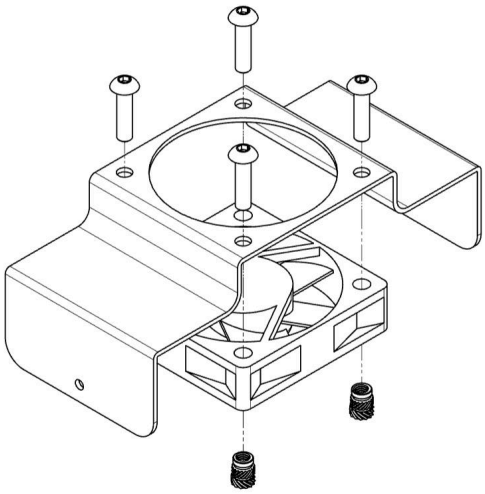

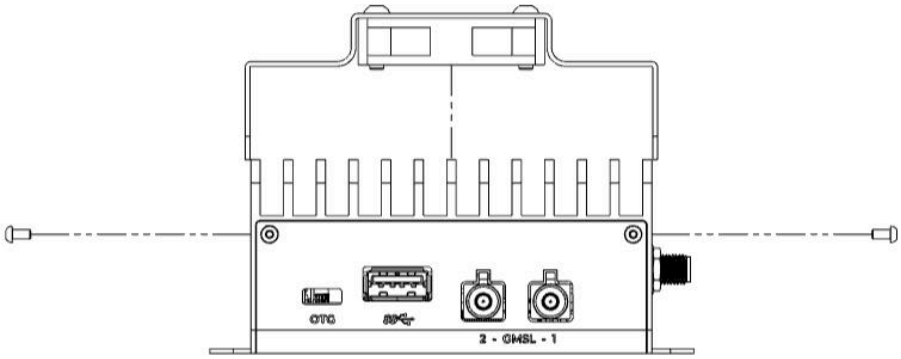

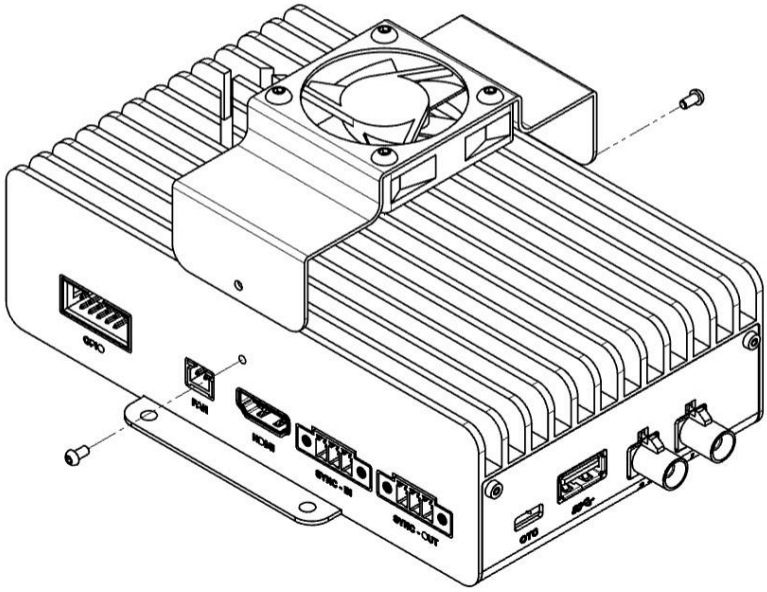

*ZED Box Mini

Appendix A: TELEC Certification

TELEC Certification
Embedded WiFi module AX210NGW
5GHz band (W52, W53) and 6GHz (LPI): Indoor use only
(Except communicate to W52 high power radio)

Model AX210NGW

- **RF: 003-220254**
- **TEL: D220163003**

5.2GHz帯高出力データ通信システム基地局又は陸上移動中継局と通信する場合を除く

R003-220254

5.15-5.35 GHz & 6GHz LPI: Indoor use only
(Except communicate to high power radio)

TD220163003