LMP-1202M-SFP-24 Series

12-Port Industrial PoE+ Managed Ethernet Switch with 8*10/100TX (30W/Port), 2*10/100/1000T RJ45, and 2*100/1000 SFP Slots; 12~55VDC Power Input

Hardware Manual

Version 1.3

(August 2025)

www.antaira.com

© Copyright 2025 Antaira Technologies, LLC

All Rights Reserved
This document contains information, which is protected by copyright. Reproduction, adaptation or translation without prior permission is prohibited, except as allowed under the copyright laws.

Trademark Information

Antaira is a registered trademark of Antaira Technologies, LLC, Microsoft Windows and the Windows logo are the trademarks of Microsoft Corp. NetWare is the registered trademark of Novell Inc. WMM and WPA are the registered trademarks of Wi-Fi Alliance. All other brand and product names are trademarks or registered trademarks of their respective owners.

Notice: Copyrights © 2025 by Antaira Technologies, LLC. All rights reserved. Reproduction, adaptation, or translation without prior permission of Antaira Technologies, LLC is prohibited, except as allowed under the copyright laws.

Disclaimer

Antaira Technologies, LLC provides this manual without warranty of any kind, expressed or implied, including but not limited to the implied warranties of merchantability and fitness for a particular purpose. Antaira Technologies, LLC may make improvements and/or changes to the product and/or specifications of the product described in this manual, without prior notice. Antaira Technologies, LLC will not be liable for any technical inaccuracies or typographical errors found in this guide. Changes are periodically made to the information contained herein and will be incorporated into later versions of the manual. The information contained is subject to change without prior notice.

FCC Warning

This equipment has been tested and found to comply with the limits for a Class-A digital device, pursuant to Part 15 of the FCC rules. These limits are designed to provide reasonable protection against harmful interference in a residential installation. This equipment generates, uses, and can radiate radio frequency energy. It may cause harmful interference to radio communications if the equipment is not installed and used in accordance with the instructions. However, there is no guarantee that interference will not occur in a particular installation. If this equipment does cause harmful interference to radio or television reception, which can be determined by turning the equipment off and on, the user is encouraged to try to correct the interference by one or more of the following measures:

- Reorient or relocate the receiving antenna.
- Increase the separation between the equipment and receiver.
- Connect the equipment into an outlet on a circuit different from that to which the receiver is connected.
- Consult the dealer or an experienced radio/TV technician for help.

Caution: Any changes or modifications not expressly approved by the grantee of this device could void the user's authority to operate the equipment.

CE Mark Warning

This is a Class-A product. In a domestic environment, this product may cause radio interference in which case the user may be required to take adequate measures.

Industrial Ethernet Switches

Industrial Grade Gigabit PoE Managed Ethernet Switches

User Manual
Version 1.3 (August 2025)

This manual supports the following models:

- LMP-1202M-SFP-24
- LMP-1202M-SFP-24-T

Table of Contents

1. Introduction 1
1.1 Product Overview 1
1.2 Product Software Features 1
1.3 Product Hardware Features 2
1.4 Package Contents 3
1.5 Safety Precaution 3
2. Hardware Description 4
2.1 Physical Dimensions 4
2.2 Front Panel 5
2.3 Top View 5
2.4 LED Indicators 6
2.5 Reset Button 7
2.6 Ethernet Ports 7
2.7 Cabling 8
2.8 Wiring the Power Inputs 11
2.9 Wiring the Fault Alarm Contact 11
2.10 Grounding Note 12
3. Mounting Installation 12
3.1 DIN-Rail Mounting 12
3.2 Wall Mounting 14
4. Hardware Installation 14
4.1 Installation Steps 15
4.2 Maintenance and Service 15

1. Introduction

All Antaira industrial managed switches come with a pre-installed “user-friendly” web console interface. It allows users to easily configure and manage the units, whether one is using a serial console and command line interface (CLI) commands like Telnet, SSH, HTTP (Web GUI), or simple network management protocols (SNMP).

1.1 Product Overview

Antaira’s LMP-1202M-SFP-24 series is a 12-port industrial PoE+ managed Ethernet switch embedded with 8*10/100TX Ethernet ports that support IEEE802.3at/af for a maximum of 30W/port, 2*10/100/1000T RJ45 and 2*100/1000 dual rate SFP slots for gigabit fiber connections. The LMP-1202M-SFP-24 series is a fully manageable Layer 2 Ethernet switch that is pre-loaded with a user-friendly web management console design. It supports the ring network redundancy function using the market’s open standard ITU-T G.8032 ERPS (Ethernet Ring Protection Switch) protocol that has a <50ms network recovery time. The advanced network filtering and security functions; such as, IGMP, VLAN, QoS, SNMP, RMON, Modbus TCP, and 802.1X/HTTPS/SSH/SSL, increase determinism and improve network management for remote SCADA systems or control networks.

The LMP-1202M-SFP-24 series is IP30 rated and DIN-rail mountable. There are also two wide operating temperature models of either a standard temperature range (STD: -10°C to 70°C) or an extended temperature range (EOT: -40°C to 75°C). This series supports a dual power input having a low voltage range (12~55VDC) and a built-in voltage booster allowing the unit to give a full 48VDC PoE power for any mobile PoE application or any low voltage power sourcing environment. It also provides high EFT and ESD protection for industrial networking applications, such as, power/utility, water wastewater, oil/gas/mining, factory automation, security surveillance within transportation, ITS and any other outdoor or harsh environment.

1.2 Product Software Features

- Network Redundancy
  - STP, RSTP, MSTP, ITU-T G.8032 Ethernet Ring Protection Switch (ERPS) for Network Redundancy
- Network Management
  - Web UI Based Management, SNMP v1/v2/v3, Serial Console
  - Qos, Traffic Classification QoS, Cos, Bandwidth Control for Ingress and

Egress, Broadcast Storm Control, Diffserv

- IEEE802.1q VLAN Tagging, Port-based VLAN Support
- IGMP Snooping v1/v2, IGMP Filtering / Throttling, IGMP Query up to 256 Group
- Supports IPv4/IPv6, RMON, MIB II, Port Mirroring, Event Syslog, DNS, NTP/SNTP, HTTPS, SSH/SSL, TFTP
- MODBUS TCP for SCADA System Integration

- Port Configuration
  - Status, Statistics, Mirroring, Rate Limiting, Event Syslog
- Event Handling
  - Event Notification by Email: Cold/Warm Start, Power Failure, Authentication, SNMP Trap and Fault Alarm Relay Output
- Software Upgrade via TFTP and HTTP
- Configuration Backup – USB Port

1.3 Product Hardware Features

- System Interface and Performance

  All RJ-45 Ports Support Auto MDI Function

  Embedded 8*10/100TX (PSE 30W/Port) RJ45 Ports, 2*10/100/1000T RJ45 and 2*100/1000 SFP Slots; 12~55VDC Power Input (Voltage Booster)

  Store-and-Forward Switching Architecture

  8K MAC Address Table

  Power Line EFT Protection: 2,000VDC; Ethernet ESD Protection: 6,000VDC
- Power Input
  - DC 12~55V 10A Redundant with a 6-Pin Removal Terminal Block
  - One User Programmable Alarm Relay Contact 24 VDC, 1A Resistive
  - The Power Input Specification is Complied with the Requirements of SELV (Safety Extra Low Voltage), and the Power Supply Should be Complied with UL 61010-1 & UL 61010-2-201
- Operating Temperature
  - LMP-1202M-SFP-24: -10°C to 70°C
  - LMP-1202M-SFP-24-T: -40°C to 75°C
- Case/Installation
  - IP-30 Protection Metal Housing
  - DIN-Rail and Wall Mount Design
  - Installation in a Pollution Degree 2 Industrial Environment

1.4 Package Contents

- 1– LMP-1202M-SFP-24 Series: 12-Port Industrial PoE+ Managed Ethernet Switch, with 8*10/100TX (PSE 30W/Port), 2*10/100/1000T RJ45 and 2*100/1000 SFP Slots; 12~55VDC Power Input (Voltage Booster)
- 1-Quick Installation Guide
- 2-Wall Mounting Brackets and Screws
- 1-RJ45 to DB9 Serial Console Cable
- 1-DC Cable –18 AWG & DC Jack 5.5x2.1mm

1.5 Safety Precaution

Attention: If the DC voltage is supplied by an external circuit, please use a protection device on the power supply input. The industrial Ethernet switch's hardware specs, ports, cabling information, and wiring installation will be described within this user manual.

Warning Labels

The caution label means that you should check the certain information on user manual when working with the device. (Shown in *Figure 1.1*)

Figure 1.1 - Caution Label

This warning label is on the device, and means that the surface of the device is hot. (Shown in F*igure 1.2*)

Figure 1.2 - Hot Surface Warning Label

2. Hardware Description

2.1 Physical Dimensions

Figure 2.1, below, shows the physical dimensions of Antaira's LMP-1202M-SFP-24 series: 12-port industrial gigabit PoE+ managed Ethernet switch, with 8*10/100TX (PSE: 30W/Port), 2*10/100/1000T RJ45, and 2*100/1000 SFP slots; 12~55VDC power input (voltage booster).

(W x D x H) is **54mm x 99mm x 142mm**

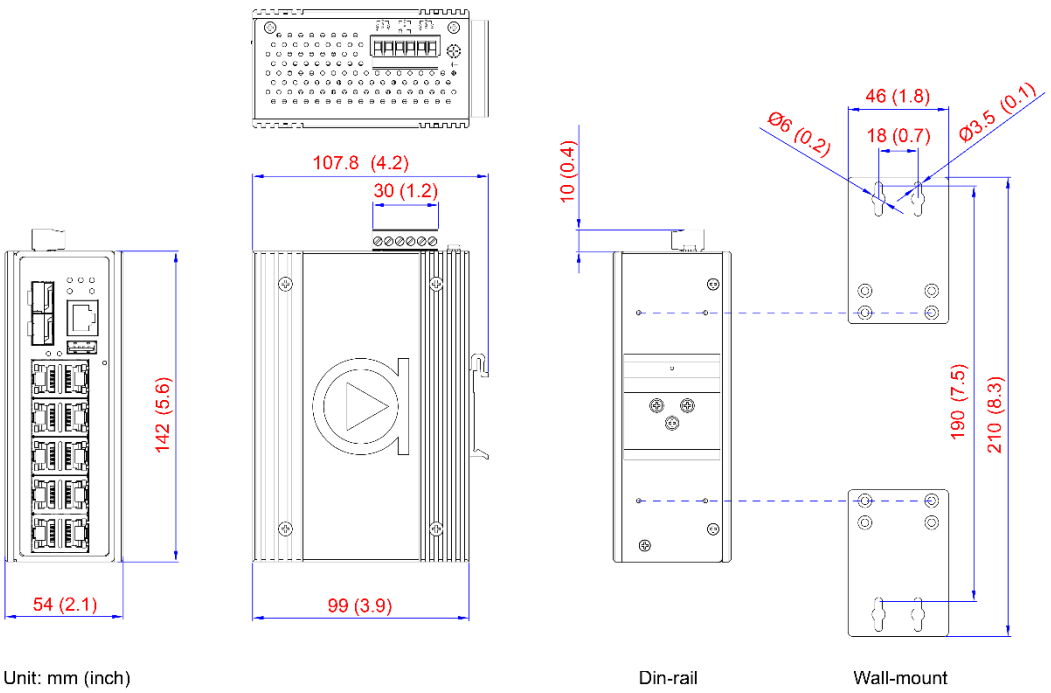

Figure 2.1 - LMP-1202M-SFP-24 Series Physical Dimensions

2.2 Front Panel

The front panel of the LMP-1202M-SFP-24 series industrial PoE+ managed Ethernet switch is shown below in *Figure 2.2*.

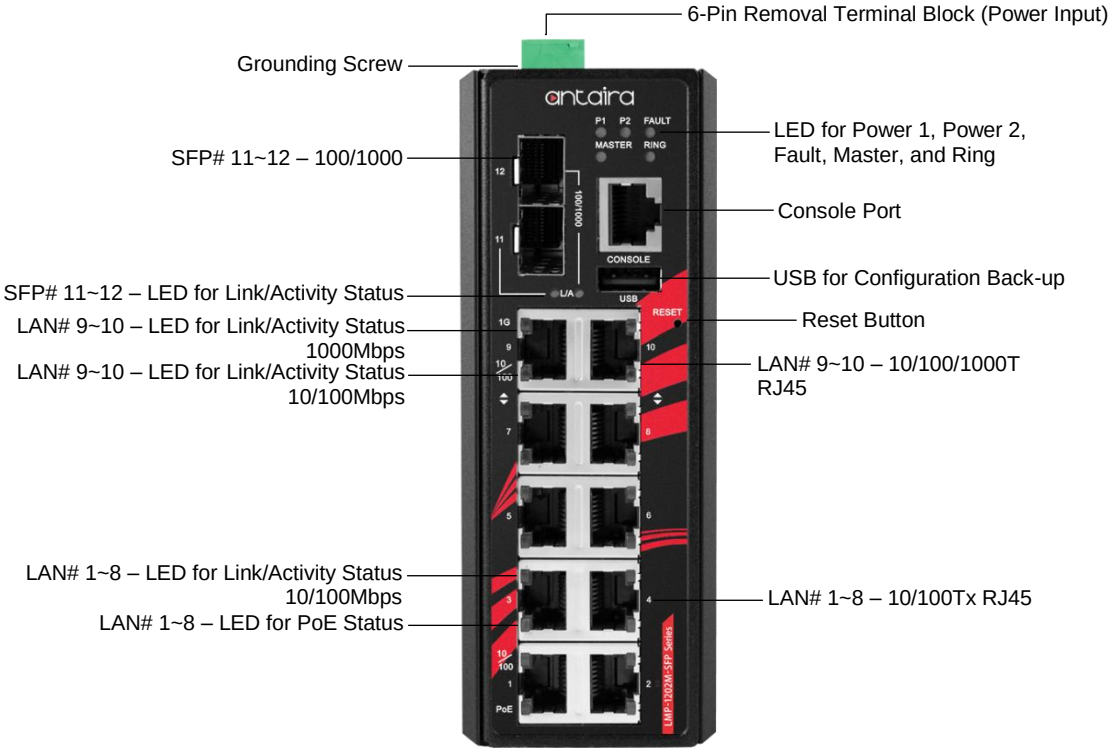

Figure 2.2 - The Front Panel of LMP-1202M-SFP-24 Series

2.3 Top View

Figure 2.3, below, shows the top panel of the LMP-1202M-SFP-24 series switch that is equipped with one 6-pin removal terminal block connector for dual DC power inputs 12~55VDC.

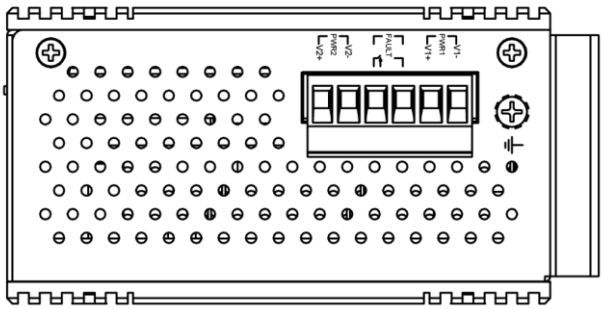

Figure 2.3- Top Panel View of LMP-1202M-SFP-24 Series

2.4 LED Indicators

There are LED light indicators located on the front panel of the industrial Ethernet switch that display the power status and network status. Each LED indicator has a different color and has its own specific meaning, see below in *Table 2.1*.

LED	Color	Description	
P1	Green	On	Power input 1 is active
		Off	Power input 1 is inactive
P2	Green	On	Power input 2 is active
		Off	Power input 2 is inactive
Fault	Green/ Red	Green	Preconfigured alarms are not detecting failure
		Red	Preconfigured alarms are detecting failure
		Flashing	Switch is in the process of booting
Owner	Green	On	ERPS Owner Mode (Ring Master) is ready
		Off	ERPS Owner Mode is not active
Ring	Green	On	Ring Network is active
		Off	Ring Network is not active
LAN Port 1 ~ 8 (Left LED)	Green	On	Connected to network, 10/100/1000Mbps
		Flashing	Networking is active
		Off	Not connected to network
LAN Port 1~ 8 (Right LED) PoE Indicators	Green 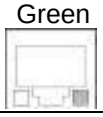	On	The port is supplying power to the powered-device
		Off	No powered-device attached or power supplying fails

Gigabit Ports LED Indicators

LED	Color	Description	
SFP Port 11~12 LNK/ACT	Green 1000Mbps	On	Connected to network
		Flashing	Networking is active
	Amber 100Mbps	Off	Not connected to network
LAN Port 9~10 (Upper LED)	Green	On	Connected to network, 1000Mbps
		Flashing	Networking is active
		Off	Not connected to network
LAN Port 9~10 (Lower LED)	Green	On	Connected to network, 10/100Mbps
		Flashing	Networking is active
		Off	Not connected to network

Table 2.1 - LED Indicators for LMP-1202M-SFP-24 Series

Caution: "P1" is the abbreviation for "Power ", “P2” is for “Power 2”, “LNK” is for “Link”, and "ACT" is for "Activity".

2.5 Reset Button

There is a 'Reset' button located on the front panel of the industrial Ethernet switch that helps users to reboot, restore default, or save running configurations by pressing the button for different seconds. Please refer to *Table 2.2* for the timing and function.

Seconds	Function
1	Save running configuration to USB
4-6	Reboot the switch
7 or more	Restore factory default

Table 2.2 – Reset Button Functions

2.6 Ethernet Ports

RJ-45 Ports

RJ-45 Ports (Auto MDI/MDIX): The RJ-45 ports are auto-sensing for 10BASE-T, 100BASE-TX, or 1000BASE-T connections. Auto MDI means that the switch can connect to another switch or workstation without changing the straight-through or crossover cabling. See the figures below for straight-through and crossover cabling schematics.

RJ-45 Pin Assignments

Pin Number	Assignment
1	Rx+
2	Rx-
3	Tx+
6	Tx-

Table 2.3 - RJ45 Pin Assignments

Note: *The "+" and "-" signs represent the polarity of the wires that make up each wire pair.*

All ports on this industrial Ethernet switch support automatic MDI operations. Users can use straight-through cables (see figure below) for all network connections to PCs, servers, and other switches or hubs. With straight-through cabling, pins 1, 2, 3, and 6 are at one end of the cable and are connected straight through to pins 1, 2, 3 and 6 at the other end of the cable. The table below (*Table 2.3*) shows the 10BASE-T/100BASE-TX/1000BASE-T MDI port pin outs.

Pin MDI-X	Signal Name	MDI Signal Name
1	Receive Data plus (RD+)	Transmit Data plus (TD+)
2	Receive Data minus (RD-)	Transmit Data minus (TD-)
3	Transmit Data plus (TD+)	Receive Data plus (RD+)
6	Transmit Data minus (TD-)	Receive Data minus (RD-)

Table 2.4 - Ethernet Signal Pin

The following figures show the cabling schematics for straight-through and crossover.

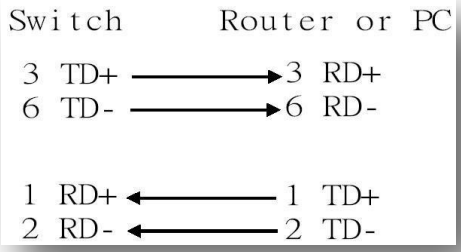

Figure 2.4
Straight-Through Cable Schematic

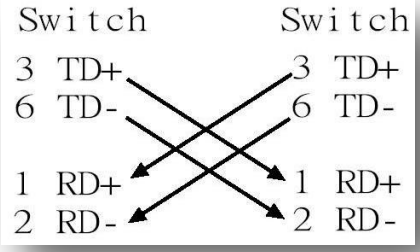

Figure 2.5
Crossover Cable Schematic

7

2.7 Cabling

Use the four twisted-pair, category 5e, or the above cabling for the RJ-45 port connections. The cable between the switch and the link partner (switch, hub, workstation, etc.) must be less than 100 meters (328 ft.) in length.

Caution: Please employ optional optical transceiver (SFP) that complies with IEC 60825-1 and classified as Class 1 laser product.

The small form-factor pluggable (SFP) is a compact optical transceiver used in optical communications for both telecommunication and data communication applications. To connect the transceiver and LC cable, please follow the steps below:

First, insert the SFP transceiver module into the SFP slot as shown below in *Figure 2.7*. Notice that the triangle mark is at the bottom of the SFP slot. *Figure 2.8* shows that the SFP transceiver module has been inserted.

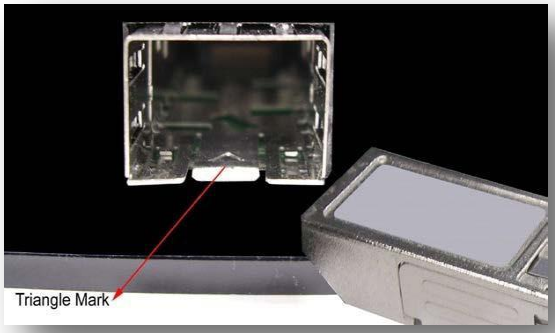

Figure 2.7 - Transceiver to the SFP Module

Figure 2.8 - Transceiver Inserted

Second, insert the fiber cable of the LC connector into the transceiver as shown in *Figure 2.9.*

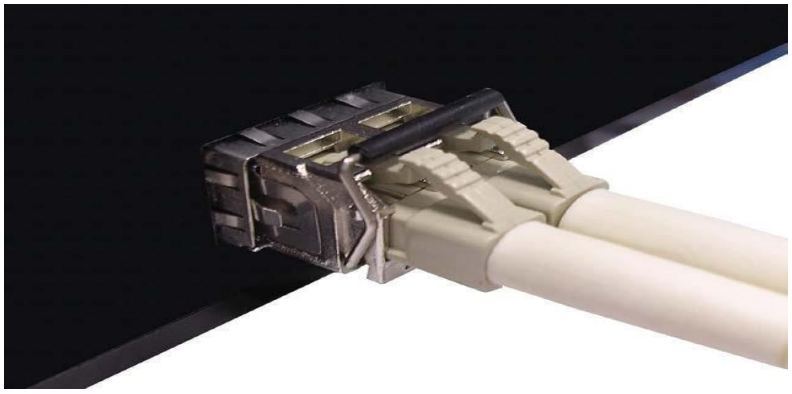

Figure 2.9 - LC Connector to the Transceiver

To remove the LC connector from the transceiver, please follow the steps shown below:

1. Press the upper side of the LC connector from the transceiver and pull it out to release as shown below in *Figure 2.10*.

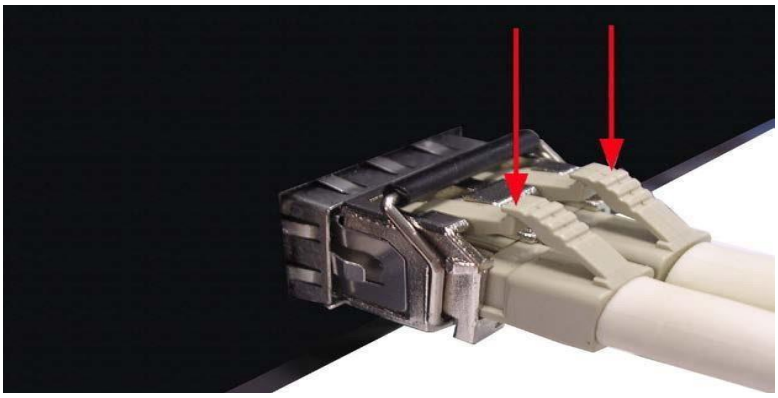

Figure 2.10 - Remove LC Connector

2. Push down the metal clasp and pull the transceiver out by the plastic part as shown below in *Figure 2.11*.

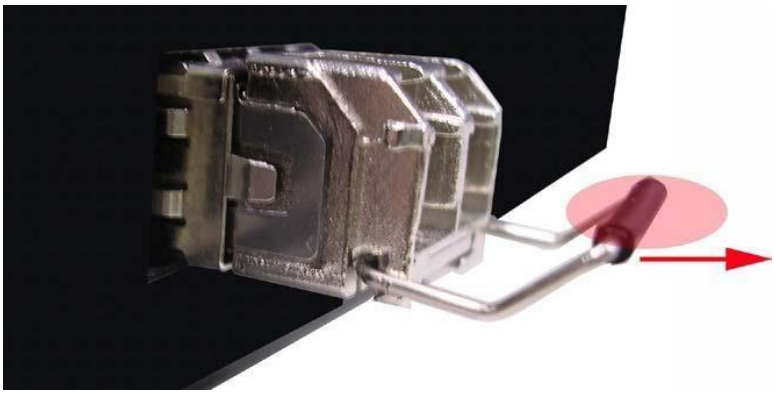

Figure 2.11
Pull Out from the SFP Module

2.7 Wiring the Power Inputs

Caution: Please follow the steps below when inserting the power wire.

1. Insert the positive and negative wires into the PWR1 (V1+, V1-) and PWR2 (V2+, V2-) contacts on the terminal block connector as shown below in *Figure 2.12*.

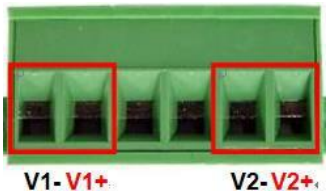

Figure 2.12 - Power Terminal Block

2. Tighten the wire-clamp screws to prevent the wires from loosening, as shown below in *Figure 2.13*.

Figure 2.13 - Power Terminal Block

Note	• *Only use copper conductors,* ***60/75°C****, tighten to* ***5lbs.***
	• *The wire gauge for the terminal block should range between* ***18~20 AWG****.*

2.8 Wiring the Fault Alarm Contact

The fault alarm contact is in the middle of the terminal block connector as the picture shows below in *Figure 2.14*. By inserting the wires, it will detect the fault status including power failure or port link failure (managed industrial switch only) and forma normally open circuit. An application example for the fault alarm contact is shown below in *Figure 2.14*.

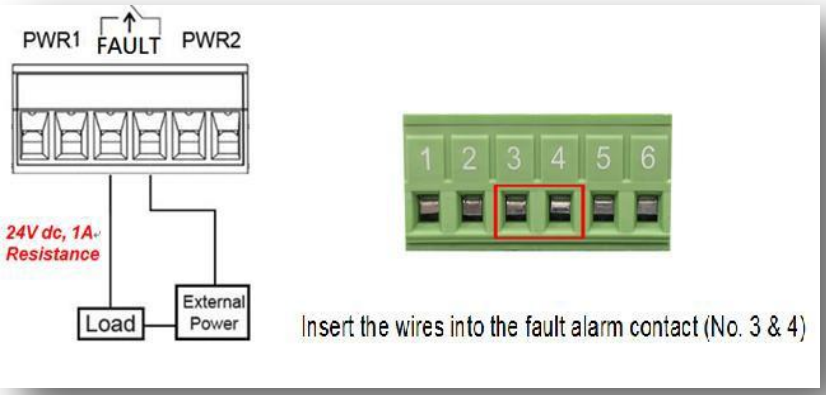

Figure 2.14 - Wiring the Fault Alarm Contact

Caution:
- *The wire gauge for the terminal block should range between **12 ~ 24AWG***
- *If only using one power source, jumper Pin 1 to Pin 5 and Pin 2 to Pin 6 to eliminate power fault alarm.*

2.10 Grounding Note

Grounding and wire routing help limit the effects of noise due to electromagnetic interference (EMI). Run the ground connection from the ground screw to the grounding surface prior to connecting devices. The grounding screw symbol is shown blow in Figure 2.15.

Figure 2.15 - Grounding screw

Caution: Using a shielded cable achieves better electromagnetic compatibility.

3. Mounting Installation

3.1 DIN-Rail Mounting

The DIN-Rail is pre-installed on the industrial Ethernet switch from the factory. If the DIN-Rail is not on the industrial Ethernet switch, please see Figure 3.1 to learn how to install the DIN-Rail on the switch.

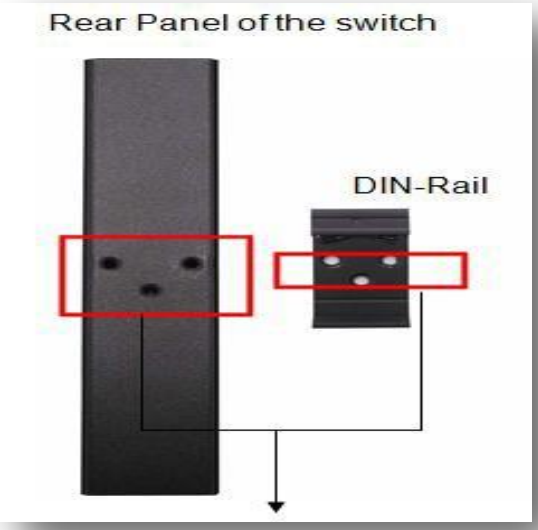

Figure 3.1
The Rear Side of the Switch and DIN-Rail Bracket

Follow the steps below to learn how to hang the industrial Ethernet switch.

1. Use the screws to install the DIN-Rail bracket on the rear side of the industrial Ethernet switch.

   Caution: The torque for tightening the screws on the device is 3.5 in-lbs.

2. To remove the DIN-Rail bracket, do the opposite from step 1.
3. After the DIN-Rail bracket is installed on the rear side of the switch, insert the top of the DIN-Rail on to the track as shown below in *Figure 3.2*.
4. Lightly pull down the bracket on to the rail as shown below in *Figure 3.3*.
5. Check if the bracket is mounted tightly on the rail.
6. To remove the industrial Ethernet switch from the rail, do the opposite from the above steps

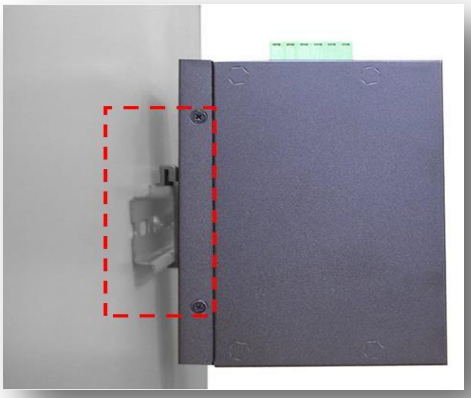

Figure 3.2

Insert the Switch on the DIN-Rail

Figure 3.3

Stable the Switch on DIN-Rail

3.2 Wall Mounting

Follow the steps below to mount the industrial Ethernet switch using the wall mounting bracket as shown below in *Figure 3.4*.

Caution: "Wall" means industrial control panel wall

1. Remove the DIN-Rail bracket from the industrial Ethernet switch by loosening the screws.
2. Place the wall mounting brackets on the top and bottom of the industrial Ethernet switch.
3. Use the screws to screw the wall mounting bracket on the industrial Ethernet switch.

   Caution: The torque for tightening the screws on the device is 3.5 in-lbs.

4. Use the hook holes at the corners of the wall mounting bracket to hang the industrial Ethernet switch on the wall.
5. To remove the wall mount bracket, do the opposite from the steps above.

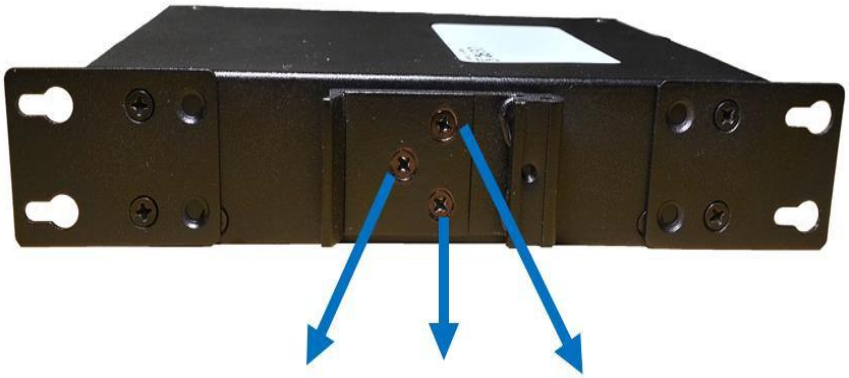

Figure 3.4

Remove DIN-Rail Bracket from the Switch

Below, in *Figure 3.5* are the dimensions of the wall mounting bracket.

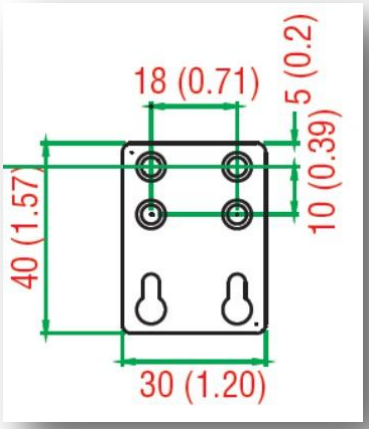

Figure 3.5

4. Hardware Installation

4.1 Installation Steps

This section will explain how to install Antaira's LMP-1202M-SFP-24 series: 12-port industrial PoE+ managed Ethernet switches with 8*10/100TX (PSE: 30W/Port), 2*10/100/1000T RJ45, and 2*100/1000 SFP Slots; 12~55VDC power input.

Caution: This device is intended for use indoor and at altitudes up to 2000 meters.

Caution: The device is intended to be installed in an industrial control enclosure and panel.

Installation Steps

1. Unpack the industrial Ethernet switch from the original packing box.
2. Check if the DIN-Rail bracket is screwed on the industrial Ethernet switch.
    - If the DIN-Rail is not screwed on the industrial Ethernet switch, please refer to the **DIN-Rail Mounting** section for DIN-Rail installation.
    - If you want to wall mount the industrial Ethernet switch, please refer to the **Wall Mounting** section for wall mounting installation.
3. To hang the industrial Ethernet switch on a DIN-Rail or wall, please refer to the **Mounting Installation** section.
4. Power on the industrial Ethernet switch and then the power LED light will turn on.
    - If you need help on how to wire power, please refer to the **Wiring the Power Inputs** section.
    - Please refer to the **LED Indicators** section for LED light indication.
5. Prepare the twisted-pair, straight-through category 5 cable for Ethernet connection.
6. Insert one side of the RJ-45 cable into switch's Ethernet port and on the other side into the networking device's Ethernet port, e.g. switch PC or server. The Ethernet port's (RJ-45) LED on the industrial Ethernet switch will turn on when the cable is connected to the networking device.
    - Please refer to the **LED Indicators** section for LED light indication.
7. When all connections are set and the LED lights all show normal, the installation is complete.

4.2 Maintenance and Service

- If the device requires servicing of any kind, the user is required to disconnect and remove it from its mounting. The initial installation should be done in a way that makes this as

convenient as possible.

- Voltage/Power lines should be properly insulated as well as other cables. Be careful when handling them so as to not trip over.
- Do not under any circumstance insert foreign objects of any kind into the heat dissipation holes located in the different faces of the device. This may not only harm the internal layout, but might cause harm to user as well.
- Do not under any circumstance open the device for any reason. Please contact your dealer for any repair needed or follow the instructions within the manual.
- Clean the device with dry soft cloth.

Antaira Customer Service and Support

(Antaira US Headquarter) + 844-268-2472

(Antaira Europe Office) + 48-22-862-88-81

(Antaira Asia Office) + 886-2-2218-9733

Please report any problems to Antaira:

www.antaira.com / support@antaira.com

www.antaira.eu / info@antaira.eu

www.antaira.com.tw / info@antaira.com.tw

Any changes to this material will be announced on the Antaira website.