LMX-1604G-4XS Series

16-Port Industrial Gigabit Managed Ethernet Switch, with 12*10/100/1000T and 4*1G/2.5G/10G SFP+ Slots, 12~48VDC Power Input

Hardware Manual

Version 1.0
(May 2025)

www.antaira.com

© Copyright 2025 Antaira Technologies, LLC

All rights reserved

This document contains information, which is protected by copyright. Reproduction, adaptation, or translation without prior permission is prohibited, except as allowed under the copyright laws.

Trademark Information

Antaira is a registered trademark of Antaira Technologies, LLC, Microsoft Windows and the Windows logo are the trademarks of Microsoft Corp. NetWare is the registered trademark of Novell Inc. WMM and WPA are the registered trademarks of Wi-Fi Alliance. All other brand and product names are trademarks or registered trademarks of their respective owners.

Notice: Copyrights © 2025 by Antaira Technologies, LLC. All rights reserved. Reproduction, adaptation, or translation without prior permission of Antaira Technologies, LLC is prohibited, except as allowed under the copyright laws.

Disclaimer

Antaira Technologies, LLC provides this manual without warranty of any kind, expressed or implied, including but not limited to the implied warranties of merchantability and fitness for a particular purpose. Antaira Technologies, LLC may make improvements and/or changes to the product and/or specifications of the product described in this manual, without prior notice. Antaira Technologies, LLC will not be liable for any technical inaccuracies or typographical errors found in this guide. Changes are periodically made to the information contained herein and will be incorporated into later versions of the manual. The information contained is subject to change without prior notice.

FCC Warning

This equipment has been tested and found to comply with the limits for a Class-A digital device, pursuant to Part 15 of the FCC rules. These limits are designed to provide reasonable protection against harmful interference in a residential installation. This equipment generates, uses, and can radiate radio frequency energy. It may cause harmful interference to radio communications if the equipment is not installed and used in accordance with the instructions. However, there is no guarantee that interference will not occur in a particular installation. If this equipment does cause harmful interference to radio or television reception, which can be determined by turning the equipment off and on, the user is encouraged to try to correct the interference by one or more of the following measures:

- Reorient or relocate the receiving antenna.
- Increase the separation between the equipment and receiver.
- Connect the equipment into an outlet on a circuit different from that to which the receiver is connected.
- Consult the dealer or an experienced radio/TV technician for help.

Caution: Any changes or modifications not expressly approved by the grantee of this device could void the user's authority to operate the equipment.

Avertissement FCC

Cet équipement a été testé et déclaré conforme aux limites d'un appareil numérique de classe A, conformément à la partie 15 des règles de la FCC. Ces limites sont conçues pour fournir une protection raisonnable contre les interférences nuisibles dans une installation résidentielle. Cet équipement génère, utilise et peut émettre de l'énergie radiofréquence. Cela peut provoquer des interférences nuisibles aux communications radio si l'équipement n'est pas installé et utilisé conformément aux instructions. Cependant, il n'y a aucune garantie qu'aucune interférence ne se produira dans une installation particulière. Si cet équipement provoque des interférences nuisibles à la réception radio ou télévision, ce qui peut être déterminé en éteignant puis en rallumant l'équipement, l'utilisateur est encouragé à essayer de corriger les interférences par une ou plusieurs des mesures suivantes:

- Réorientez ou déplacez l'antenne de réception.
- Augmentez la distance entre l'équipement et le récepteur.
- Connectez l'équipement à une prise sur un circuit différent de celui auquel le récepteur est connecté.
- Consultez le revendeur ou un technicien radio / TV expérimenté pour obtenir de l'aide.

CE Mark Warning

This is a Class-A product. In a domestic environment this product may cause radio interference in which case the user may be required to take adequate measures.

Avertissement de marque CE

Ceci est un produit de classe A. Dans un environnement domestique, ce produit peut provoquer des interférences radio, auquel cas l'utilisateur peut être amené à prendre des mesures adéquates.

Industrial Ethernet Switches

Industrial Grade Managed Ethernet Switches

Hardware Manual
Version 1.0 (May 2025)

The manual supports the following models:

- LMX-1604G-4XS
- LMX-1604G-4XS-T

This document is the current official release hardware manual. Please check our website (www.antaira.com) for any updated manual or contact us by e-mail (support@antaira.com).

Table of Contents

1 Overview **1**
1.1 Product Hardware Features 1
1.2 Package Contents 2
1.3 Safety Precaution 2
2 Hardware Description **4**
2.1 Physical Dimensions 4
2.2 Front View Panel 5
2.3 Rear View Panel 5
2.4 LED Indicators 6
2.5 Reset Button 7
2.6 Ethernet Ports 7
2.7 Cabling 8
2.8 Wiring the Power Inputs 10
2.9 Relay Contact Alarm Warning 11
2.10 Grounding Note 12
3 Mounting Installation **13**
3.1 DIN-Rail Mounting 13
3.1 Wall Mounting 15
4 Hardware Installation **16**
4.1 Installation Steps 16
4.2 Maintenance and Service 17
4.3 Troubleshooting 18

1 Overview

Antaira Technologies' LMX-1604G-4XS series is a 16-port industrial gigabit managed Ethernet switch embedded with 12*10/100/1000T Ethernet ports and 4*1G/2.5G/10G SFP+ slots for fiber connections. The LMX-1604G-4XS series is a fully manageable Ethernet switch that is pre-loaded with a user-friendly web management console design. There are also two wide operating temperature models for either a standard temperature range (STD: -10°C to 65°C) or an extended temperature range (EOT: -40°C to 75°C).

1.1 Product Hardware Features

System Interface and Performance

- All RJ45 ports support Auto MDI/MDI-X Function
- Embedded 12*10/100/1000T RJ45 ports and 4*1G/2.5G/10G SFP+ slots
- Store-and-forward switching architecture
- 32K MAC address table
- Supports 9.6Kbytes Jumbo Frame
- 32Mbits memory buffer
- Power Line EFT protection: 2,000VDC; Ethernet ESD protection: 6,000VDC

Product Input

- DC 12~48 redundant, with 1* 4-pin and 1*2-pin removable Terminal Block
- Max current: 2A
- The power input specification is complied with the requirements of SELV (Safety Extra Low Voltage) and the power supply should be complied with UL 61010-1 & UL 61010-2-201

Operating Temperature

- LMX-1604G-4XS: -10°C to 65°C
- LMX-1604G-4XS-T: -40°C to 75°C

Case / Installation

- IP30 protection metal housing
- Rack mount design
- Installation in a pollution degree 2 industrial environment
- Standalone installation

1.2 Package Contents

- LMX-1604G-4XS(-T)
- Quick Installation Guide

- Wall mounting brackets set with screws
- DC cable- 18AWG & DC jack 5.5 x 2.1mm
- RJ45 dust cover set
- RJ45 to DB9 serial console cable

1.3 Safety Precaution

Attention: If the DC voltage is supplied by an external circuit, please use a protection device on the power supply input. The industrial Ethernet switch's hardware specs, ports, cabling information, and wiring installation will be described within this hardware manual.

Attention: Si la tension CC est fournie par un circuit externe, veuillez utiliser un dispositif de protection sur l'entrée d'alimentation. Les spécifications matérielles, les ports, les informations de câblage et l'installation du câblage du commutateur Ethernet industriel seront décrits dans ce manuel d'utilisation.

Warning Labels

The caution label means that you should check the certain information on the user manual when working with the device. (Shown in *Figure 1.1*)

Étiquettes d'avertissement

L'étiquette d'avertissement signifie que vous devez vérifier certaines informations sur le manuel d'utilisation lorsque vous travaillez avec l'appareil. (Montré dans la *figure 1.1*)

Figure 1.1 - Caution Label
Figure 1.1 - Étiquette de mise en garde

Figure 1.2 - Hot Surface Warning Label
Figure 1.2 - Étiquette d'avertissement de surface chaude

2 Hardware Description

2.1 Physical Dimensions

Figure 2.1, below, shows the physical dimensions of this product series:

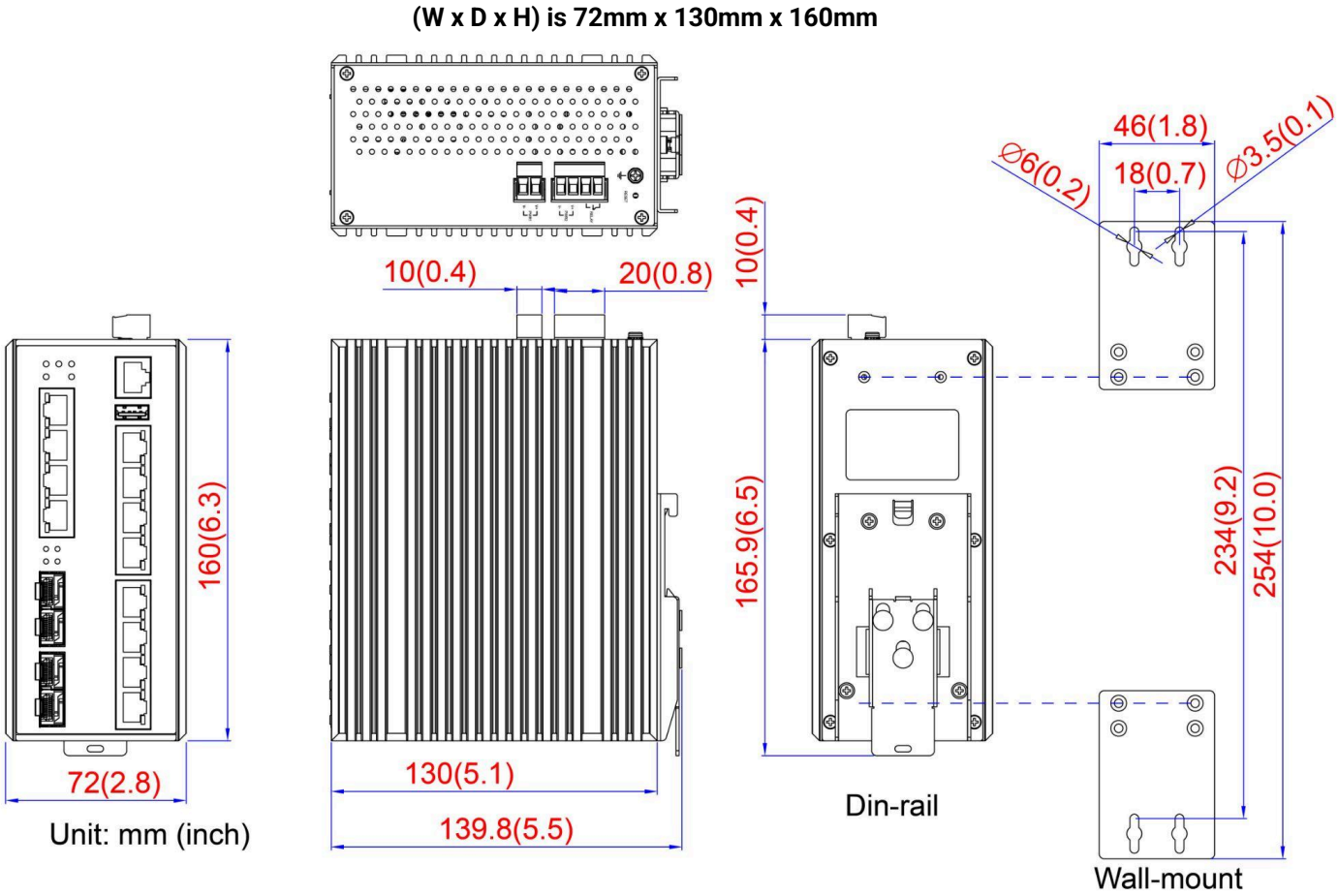

Figure 2.1 - Physical Dimensions

2.2 Front View Panel

Figure 2.2, below, shows the front panel of the product series:

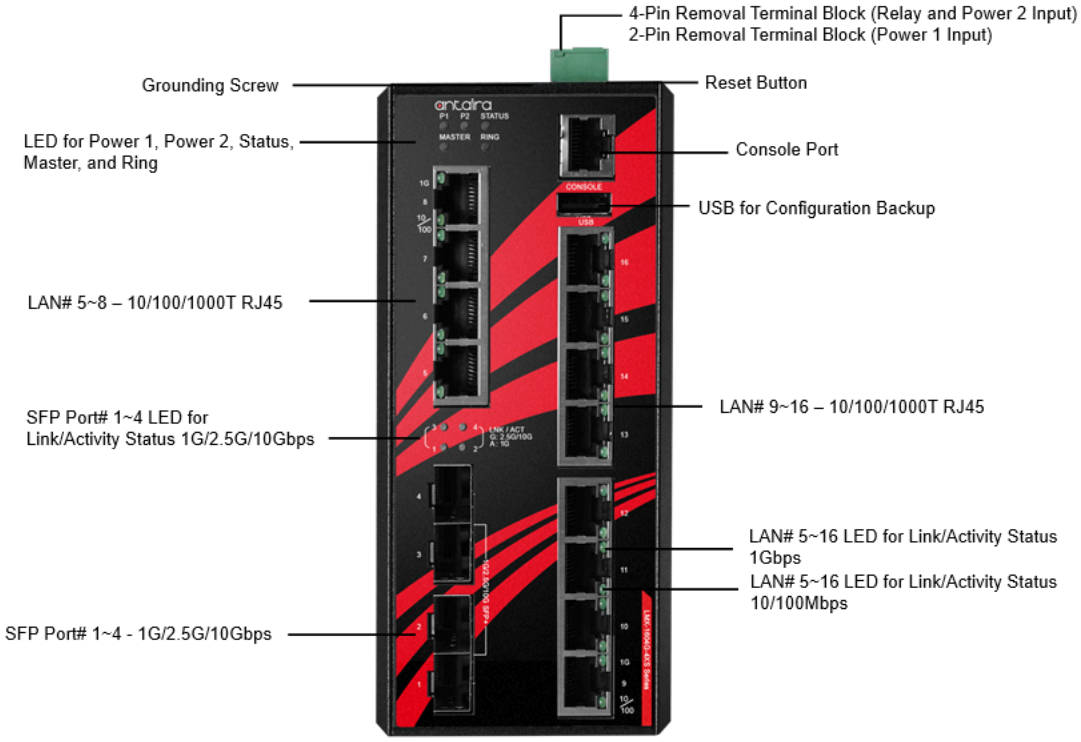

Figure 2.2 - Front View Panel

2.3 Rear View Panel

Figure 2.3, below, shows the rear panel of the product series:

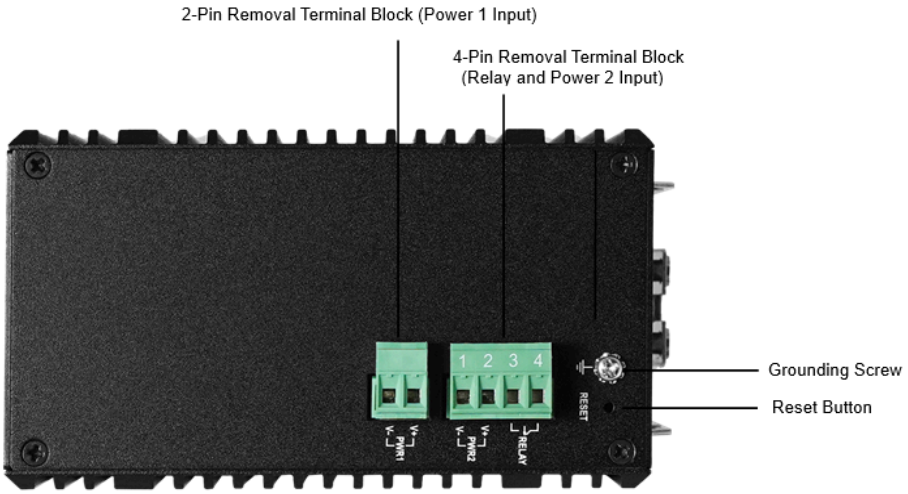

Figure 2.3 - Rear View Panel

2.4 LED Indicators

There are LED light indicators located on the front panel of the industrial Ethernet switch that display the power status and network status. Each LED indicator has a different color and has its own specific meaning, see below in *Table 2.1*.

LED	Color	Description	
P1	Green	On	Power Input 1 is active
		Off	Power Input 1 is inactive
P2	Green	On	Power Input 2 is active
		Off	Power Input 2 is inactive
Status	Green	On	No event happened
	Red	On	Event happened by software setting
		Flashing	1. System booting 2. Firmware upgrade or backup configuration to USB (for Reset Button)
	Green & Red	Flashing	Reset to default (for Reset Button)
Master	Green	On	ERPS Owner Mode (Ring Master) is ready
		Off	ERPS Owner Mode is not active
Ring	Green	On	ERPS Ring Network is active and works well
		Flashing	ERPS Ring Network works abnormally or misconfigure
		Off	ERPS Ring Network is not active
SFP Port 1~4 (Link/Activity)	Green	On	Connected to network, 2.5G/10Gbps
		Flashing	Networking is active
		Off	Not connected to network
	Amber	On	Connected to network, 1Gbps
		Flashing	Networking is active
		Off	Not connected to network
LAN Port 5~16 Speed	Green	On	Connected to network, 1000Mbps
		Flashing	Networking is active
		Off	Not connected to network

	Green	On	Connected to network, 10/100Mbps
		Flashing	Networking is active
		Off	Not connected to network

Table 2.1 - LED Indicators

Note: *"P1" is the abbreviation for "Power 1", "P2" is for "Power 2", "LNK" is for "Link", and "ACT" is for "Activity".*

2.5 Reset Button

There is a "reset" button located on the top panel of the industrial Ethernet switch that helps users to reboot, restore default, or save running configurations by pressing the button for different seconds. Please refer to *Table 2.1* for the timing and function.

Seconds	Function
0~4 seconds	Reboot the switch
4~8 seconds	Restore factory default
More than 8 seconds	Save running configuration to USB

Table 2.1 - Reset Button Functions

2.6 Ethernet Ports

RJ45 Ports (Auto MDI/MDI-X): The RJ45 ports are auto-sensing for 10BASE-T, 100BASE-TX, or 1000BASE-T connections. Auto MDI means that the switch can connect to another switch or workstation without changing the straight-through or crossover cabling. See the figures below for straight-through and crossover cabling schematics.

- **10/100BASE-TX RJ45 Pin Assignments**

Crossover Cable		Straight Through Cable	
Pin Number / Signal	**Pin Number / Signal**	**Pin Number / Signal**	**Pin Number / Signal**
1 / RX+	3 / TX+	1 / RX+	1 / TX+
2 / RX-	6 / TX-	2 / RX-	2 / TX-
3 / TX+	1 / RX+	3 / TX+	3 / RX+
6 / TX-	2 / RX-	6 / TX-	6 / RX-

Table 2.2 - 10/100BASE-TX RJ45 Pin Assignments

- **1000BASE-T RJ45 Pin Assignments**

Crossover Cable		Straight Through Cable	
Pin Number / Signal	**Pin Number / Signal**	**Pin Number / Signal**	**Pin Number / Signal**
1 / TP0+	3 / TP1+	1 / TP0+	1 / TP1+
2 / TP0-	6 / TP1-	2 / TP0-	2 / TP1-
3 / TP1+	1 / TP0+	3 / TP1+	3 / TP0+
4 / TP2+	7 / TP3+	4 / TP2+	4 / TP3+
5 / TP2-	8 / TP3-	5 / TP2-	5 / TP3-
6 / TP1-	2 / TP0-	6 / TP1-	6 / TP0-
7 / TP3+	4 / TP2+	7 / TP3+	7 / TP2+
8 / TP3-	5 / TP2-	8 / TP3-	8 / TP2-

Table 2.3 - 1000BASE-T RJ45 Pin Assignments

Note: *"+" and "-" signs represent the polarity of the wires that make up each wire pair.*

2.7 Cabling

Use the four twisted-pair, category 5e, or the above cabling for the RJ45 port connections. The cable between the switch and the link partner (switch, hub, workstation, etc.) must be less than 100 meters (328 ft.) in length.

The small form-factor pluggable (SFP) is a compact optical transceiver used in optical communications for both telecommunication and data communication applications.

Caution: Please employ optional optical transceiver (SFP/Fixed Fiber) that complies with IEC-60825-1 and classified as Class 1 laser product.

Attention: Veuillez utiliser un émetteur-récepteur optique en option (SFP/fibre fixe) conforme à la norme IEC-60825-1 et classé comme produit laser de classe 1.

To connect the transceiver and LC cable, please follow below steps:

Step 1 - Insert the SFP transceiver module into the SFP slot as shown below in *Figure 2.4*. Notice that the triangle mark is at the bottom of the SFP slot. *Figure 2.5* shows the SFP transceiver module was inserted.

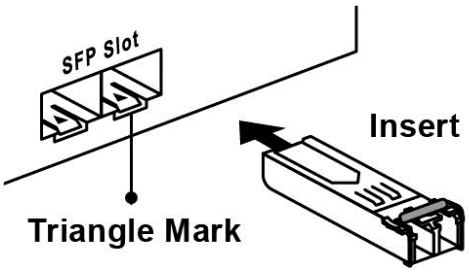

Figure 2.4 - Transceiver to the SFP Module

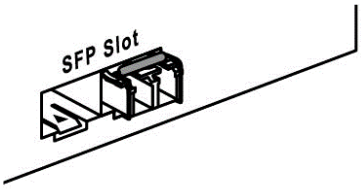

Figure 2.5 - Transceiver Inserted

Step 2 - Insert the fiber cable of the LC connector into the transceiver as shown below in *Figure 2.6*.

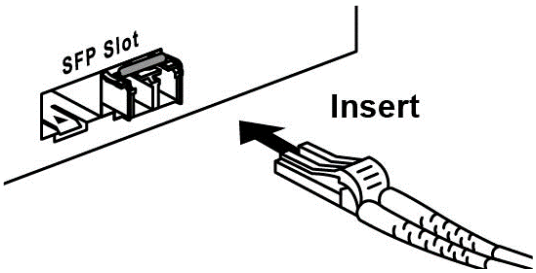

Figure 2.6 - LC Connector to the Transceiver

To remove the LC connector from the transceiver, please follow the steps shown below:

Step 1 - Press the upper side of the LC connector from the transceiver and pull it out to release as shown below in *Figure 2.7*.

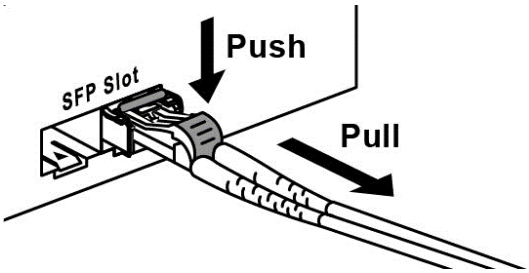

Figure 2.7 - Remove LC Connector

Step 2 - Push down the metal clasp and pull the transceiver out by the plastic part as shown below in *Figure 2.8*.

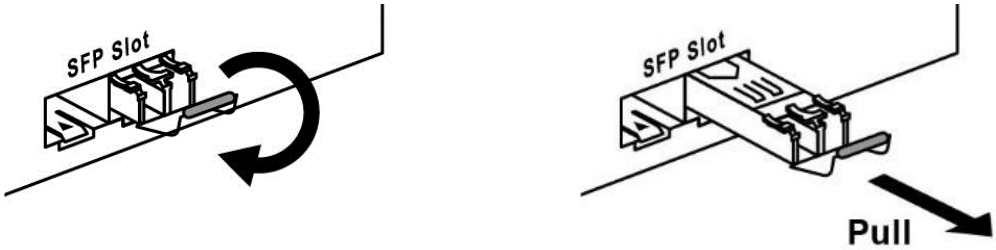

Figure 2.8 - Pull Out from the SFP Module

2.8 Wiring the Power Inputs

Caution: Please follow the steps below when inserting the power wire.

Attention: Veuillez suivre les étapes ci-dessous lors de l'insertion du câble d'alimentation.

1. Insert the positive and negative wires into the PWR1 (V1+, V1-) and PWR2 (V2+, V2-) contacts on the terminal block connector as shown below in *Figure 2.9*.

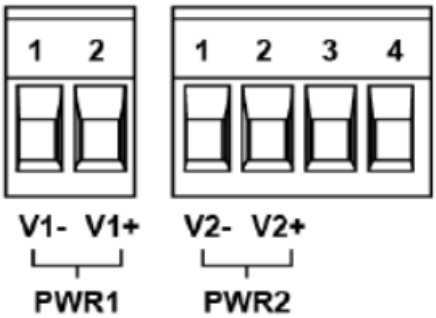

Figure 2.9 - Power Terminal Block Connector

2. Tighten the wire-clamp screws to prevent the wires from loosening, as shown below in *Figure 2.10*.

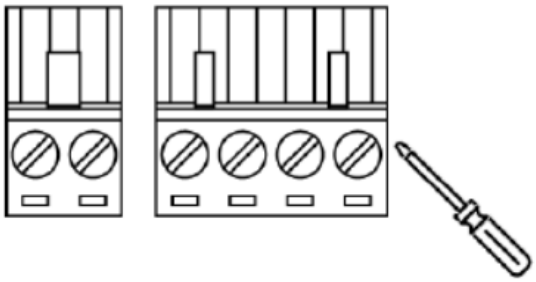

Figure 2.10 - Power Terminal Block Connector

Caution:

*Only use copper conductors, **125°C**, tighten to **7 lbs.***

*The wire gauge for the terminal block should range between **18~20 AWG**.*

Attention:

*Utilisez uniquement des conducteurs en cuivre, **125°C**, serrez à **7 lb.***

*Le calibre des fils du bornier doit être compris entre **18** et **20 AWG.***

2.9 Relay Contact Alarm Warning

1*24VDC@1A resistive normal open on a 2-pin terminal block.

The relay contact alarm will be triggered when any one of the pre-configured events occurs. Users can configure the event warning for the events listed below. (Software Default: OFF)

The relay contact alarm will be triggered when any one of the listed events occurs.

Key trigger event 1: Power-1 or Power-2 is inactive

Key trigger event 2: PoE total loading >100% PoE output budget

Key trigger event 3: PoE over current per port

Key trigger event 4: Cable short per port

Key trigger event 5: One of the channels in dual PD fail

[Notice] When the relay is triggered because of Event 2~5, the relay contact alarm will update the status every 30 seconds. If there is no event happening for 30 seconds, the relay contact alarm will be turned off. If the user disables the failed PoE port by removing the cable or Dip Switch manually, the relay will be recovered immediately.

Caution: The wire gauge for the terminal block should range between 12 ~ 24 AWG. If only using one power source, jumper Pin 1 to Pin 5 and Pin 2 to Pin 6 to eliminate power fault alarm.

Attention: Le calibre des fils du bornier doit être compris entre 12 et 24 AWG. Si vous n'utilisez qu'une seule source d'alimentation, jumelez les broches 1 à 5 et les broches 2 à 6 pour éliminer l'alarme de panne de courant.

2.10 Grounding Note

Grounding and wire routing help limit the effects of noise due to Electromagnetic Interference (EMI). Run the ground connection from the ground screw to the grounding surface prior to connecting devices. The grounding screw symbol is shown below in *Figure 2.11*.

Figure 2.11 - Grounding Screw Symbol

Caution: Using a shielded cable achieves better electromagnetic compatibility.

Attention: L'utilisation d'un câble blindé permet une meilleure compatibilité électromagnétique

3 Mounting Installation

3.1 DIN-Rail Mounting

The DIN-Rail is pre-installed on the industrial Ethernet Switch from the factory. If the DIN-Rail is not on the industrial Ethernet Switch, please see Figure 3.1 to learn how to install the DIN-Rail on the Switch.

Figure 3.1 - The Top View of the Switch and Rack Mounting Bracket

Follow the steps below to learn how to hang the industrial Switch.

Step 1 - Use the screws to install the DIN-Rail bracket on the rear side of the industrial Switch.

Step 2 - To remove the DIN-Rail bracket, do the opposite from Step 1.

Step 3 - After the DIN-Rail bracket is installed on the rear side of the Switch, insert the top of the DIN-Rail onto the track as shown below in Figure 3.2.

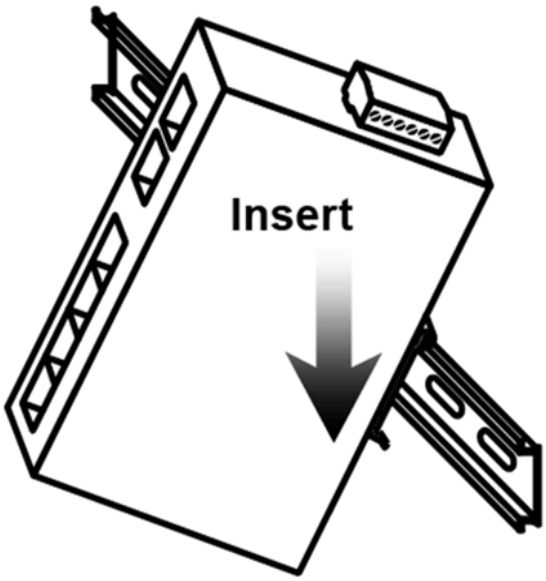

Figure 3.2 - Insert the Switch on the DIN-Rail

Step 4 - Lightly pull down the bracket onto the rail as shown below in *Figure 3.3*.

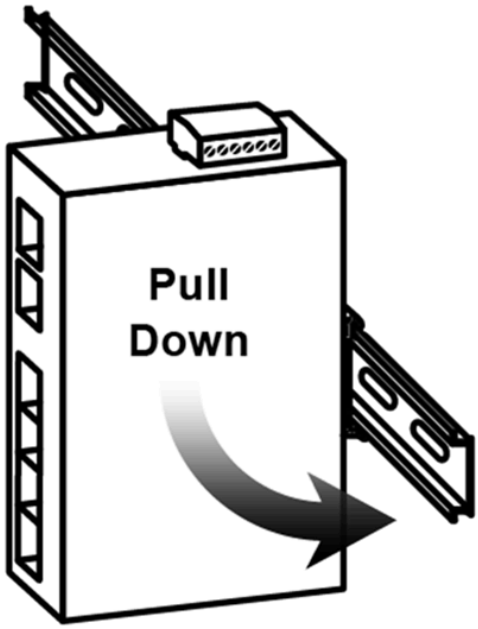

Figure 3.3 - Stable the Switch on DIN-Rail

Step 5 - Check if the bracket is mounted tightly on the rail.

Step 6 - To remove the industrial Switch from the rail, do the opposite from the above steps.

3.1 Wall Mounting

Follow the steps below to mount the industrial Switch using the wall mounting bracket as shown below in *Figure 3.4*.

Step 1 - Remove the DIN-Rail bracket from the industrial Switch by loosening the screws.

Step 2 - Place the wall mounting brackets on the top and bottom of the industrial Switch.

Step 3 - Use the screws to screw the wall mounting bracket on the industrial Switch.

Step 4 - Use the hook holes at the corners of the wall mounting bracket to hang the industrial Switch on the wall.

Step 5. To remove the wall mount bracket, do the opposite from the steps above.

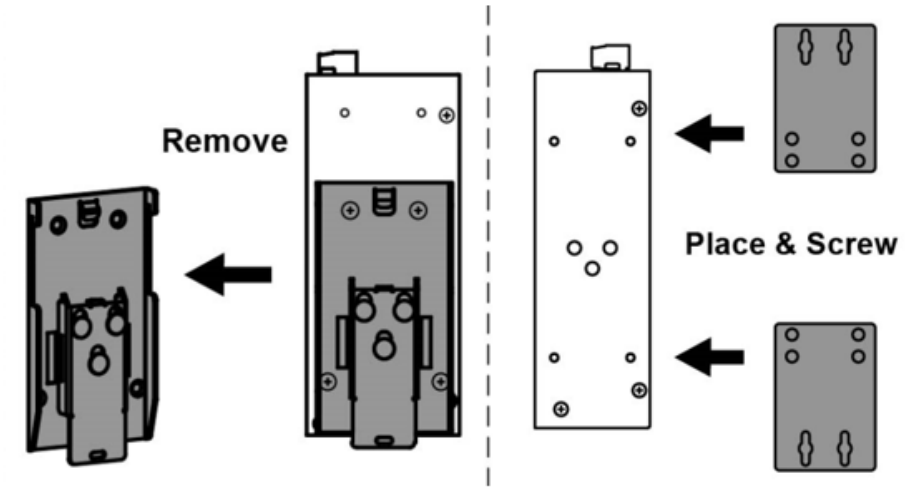

Figure 3.4 - Remove DIN-Rail Bracket from the Switch and Install the Wall Mount Bracket

Below, in *Figure 3.5* are the dimensions of the wall mounting bracket.

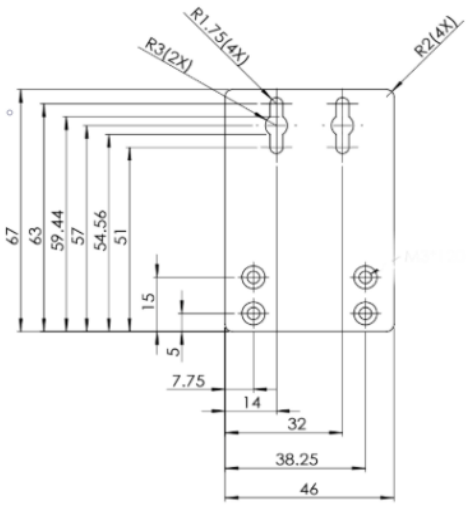

Figure 3.5 - Wall Mounting Bracket Dimensions

4 Hardware Installation

4.1 Installation Steps

This section will explain how to install the industrial Ethernet switch:

Installation Steps

1. Unpack the industrial Ethernet switch from the original packing box.
2. Check if the DIN-Rail bracket is screwed on the industrial Switch.
    - If the DIN-Rail is not screwed on the industrial Switch, please refer to the **DIN-Rail Mounting** section for DIN-Rail installation.
    - If you want to wall mount the industrial Switch, please refer to the **Wall Mounting** section for wall mounting installation.
3. To hang the industrial Switch on a DIN-Rail or wall, please refer to the **Mounting Installation** section.
4. Power on the industrial switch and then the power LED light will turn on.
    - If you need help on how to wire power, please refer to the **Wiring the Power Inputs** section.
    - Please refer to the **LED Indicators** section for LED light indication.
5. Prepare the twisted-pair, straight-through category 5 cable for Ethernet connection
6. Insert one side of the RJ45 cable into the switch's Ethernet port and on the other side into the networking device's Ethernet port, e.g. switch PC or server. The Ethernet port's (RJ45) LED on the industrial switch will turn on when the cable is connected to the networking device.
    - Please refer to the **LED Indicators** section for LED light indication.
7. Insert one side of the SFP cable into the switch's SFP port and on the other side into the networking device's SFP port, e.g. switch or server. The SFP port's LED on the industrial switch will turn on when the cable is connected to the networking device.
    - Please refer to the **LED Indicators** section for LED light indication.
8. When all connections are set and the LED lights all show normal, the installation is complete.

Caution: If the equipment is used in a manner not specified by the manufacturer, the protection provided by the equipment may be impaired.

Attention: Si l'équipement est utilisé d'une manière non spécifiée par le fabricant, la protection fournie par l'équipement peut être altérée.

Caution: The installation that the safety to any system incorporating the equipment is the responsibility of the assembler of the system.

Attention: L'installation que la sécurité de tout système intégrant l'équipement est de la responsabilité de l'assembleur du système.

Caution: This is an OPEN TYPE module and should be installed in a final safety enclosure characteristic.

Attention: Il s'agit d'un module de TYPE OUVERT et doit être installé dans une caractéristique finale d'enceinte de sécurité.

Caution: This device is intended for use indoor and at altitudes up to 2000 meters.

Attention: Cet appareil est destiné à être utilisé en intérieur et à des altitudes allant jusqu'à 2000 mètres.

Caution: Ambient Relative Humidity should be within the range of 5 and 95% (non-condensing).

Attention: L'humidité relative ambiante doit être comprise entre 5 et 95% (sans condensation).

4.2 Maintenance and Service

- If the device requires servicing of any kind, the user is required to disconnect and remove it from its mounting. The initial installation should be done in a way that makes this as convenient as possible.
- Voltage / Power lines should be properly insulated as well as other cables. Be careful when handling them so as to not trip over.
- Do not under any circumstance insert foreign objects of any kind into the heat dissipation holes located in the different faces of the device. This may not only harm the internal layout, but might cause harm to users as well.
- Do not under any circumstance open the device for any reason. Please contact your dealer for any repair needed or follow the instructions within the manual.

- Clean the device with dry soft cloth.

4.3 Troubleshooting

- Always verify the right power cord or adapter is being used. Never use a power supply or adapter with a non-compliant DC output voltage or it will burn the equipment.
- Select the proper UTP or STP cable in order to construct the network. Use an unshielded twisted-pair (UTP) or shield twisted-pair (STP) cable for RJ45 connections: 100Ω Category 5e for 10/100Mbps. Also be sure that the length of any twisted-pair connection does not exceed 100 meters (328 feet).
- Diagnosing LED Indicators: To assist in identifying problems, the switch can be easily monitored with the LED indicators which help to identify if any problems exist.
    - Please refer to the LED Indicators section for LED light indication.
- If the power indicator LED does not turn on when the power cord is plugged in, the user may have a problem with the power cord. Check for loose power connections, power losses or surges at the power outlet.
    - Please contact Antaira for technical support service if the problem still cannot be resolved.
- If the industrial switch LED indicators are normal and the connected cables are correct but the packets still cannot transmit, please check the system's Ethernet devices' configuration or status.

Antaira Customer Service and Support
(Antaira US Headquarter) + 844-268-2472
(Antaira Europe Office) +48-22-862-88-81
(Antaira Asia Office) +886-2-2218-9733
Please report any problems to Antaira:
www.antaira.com / support@antaira.com
www.antaira.eu / info@antaira.eu
www.antaira.com.tw / info@antaira.com.tw
Any changes to this material will be announced on the Antaira website.