LNX-2004G-SFP Series

20-Port Industrial Gigabit Unmanaged Ethernet Switch, with 16*10/100/1000Tx and 4*100/1000 SFP Slots

Hardware Manual

Version 1.0
(October 2022)

www.antaira.com

© Copyright 2022 Antaira Technologies, LLC

All rights reserved

This document contains information, which is protected by copyright. Reproduction, adaptation, or translation without prior permission is prohibited, except as allowed under the copyright laws.

Trademark Information

Antaira is a registered trademark of Antaira Technologies, LLC, Microsoft Windows and the Windows logo are the trademarks of Microsoft Corp. NetWare is the registered trademark of Novell Inc. WMM and WPA are the registered trademarks of Wi-Fi Alliance. All other brand and product names are trademarks or registered trademarks of their respective owners.

Notice: Copyrights © 2022 by Antaira Technologies, LLC. All rights reserved. Reproduction, adaptation, or translation without prior permission of Antaira Technologies, LLC is prohibited, except as allowed under the copyright laws.

Disclaimer

Antaira Technologies, LLC provides this manual without warranty of any kind, expressed or implied, including but not limited to the implied warranties of merchantability and fitness for a particular purpose. Antaira Technologies, LLC may make improvements and/or changes to the product and/or specifications of the product described in this manual, without prior notice. Antaira Technologies, LLC will not be liable for any technical inaccuracies or typographical errors found in this guide. Changes are periodically made to the information contained herein and will be incorporated into later versions of the manual. The information contained is subject to change without prior notice.

FCC Warning

This equipment has been tested and found to comply with the limits for a Class-A digital device, pursuant to Part 15 of the FCC rules. These limits are designed to provide reasonable protection against harmful interference in a residential installation. This equipment generates, uses, and can radiate radio frequency energy. It may cause harmful interference to radio communications if the equipment is not installed and used in accordance with the instructions. However, there is no guarantee that interference will not occur in a particular installation. If this equipment does cause harmful interference to radio or television reception, which can be determined by turning the equipment off and on, the user is encouraged to try to correct the interference by one or more of the following measures:

- Reorient or relocate the receiving antenna.
- Increase the separation between the equipment and receiver.
- Connect the equipment into an outlet on a circuit different from that to which the receiver is connected.
- Consult the dealer or an experienced radio/TV technician for help.

Caution: Any changes or modifications not expressly approved by the grantee of this device could void the user's authority to operate the equipment.

Avertissement FCC

Cet équipement a été testé et déclaré conforme aux limites d'un appareil numérique de classe A, conformément à la partie 15 des règles de la FCC. Ces limites sont conçues pour fournir une protection raisonnable contre les interférences nuisibles dans une installation résidentielle. Cet équipement génère, utilise et peut émettre de l'énergie radiofréquence. Cela peut provoquer des interférences nuisibles aux communications radio si l'équipement n'est pas installé et utilisé conformément aux instructions. Cependant, il n'y a aucune garantie qu'aucune interférence ne se produira dans une installation particulière. Si cet équipement provoque des interférences nuisibles à la réception radio ou télévision, ce qui peut être déterminé en éteignant puis en rallumant l'équipement, l'utilisateur est encouragé à essayer de corriger les interférences par une ou plusieurs des mesures suivantes:

- Réorientez ou déplacez l'antenne de réception.
- Augmentez la distance entre l'équipement et le récepteur.
- Connectez l'équipement à une prise sur un circuit différent de celui auquel le récepteur est connecté.
- Consultez le revendeur ou un technicien radio / TV expérimenté pour obtenir de l'aide.

CE Mark Warning

This is a Class-A product. In a domestic environment, this product may cause radio interference in which case the user may be required to take adequate measures.

Avertissement de marque CE

Ceci est un produit de classe A. Dans un environnement domestique, ce produit peut provoquer des interférences radio, auquel cas l'utilisateur peut être amené à prendre des mesures adéquates.

Industrial Ethernet Switches

Industrial Grade PoE+ Unmanaged Ethernet Switches

Hardware Manual
Version 1.0 (October 2022)

The manual supports the following models:

- LNX-2004G-SFP
- LNX-2004G-SFP-T

This document is the current official release hardware manual. Please check our website (www.antaira.com) for any updated manual or contact us by e-mail (support@antaira.com).

Table of Contents

1 Overview **5**
1.1 Product Hardware Features 5
1.2 Package Contents 1
1.3 Safety Precaution 1
2 Hardware Description **2**
2.1 Physical Dimensions 2
2.2 Front View Panel 2
2.3 Top View Panel 2
2.4 LED Indicators 3
2.5 Ethernet Ports 6
2.6 Cabling 7
2.7 Wiring the Power Inputs 8
2.8 Wiring the Fault Alarm Contact 8
2.9 Grounding Note 9
3 Mounting Installation **9**
3.1 DIN-Rail Mounting 9
3.2 Wall Mounting 11
4 Hardware Installation **12**
4.1 Installation Steps 12
4.2 Maintenance and Service 14
4.3 Troubleshooting 15

1 Overview

Antaira Technologies' LNX-2004G-SFP series is a 20-port industrial gigabit unmanaged Ethernet switch embedded with 16*10/100/1000Tx Ethernet ports and 4*100/1000 SFP slots for fiber connection. This rugged switch is enclosed in a metal IP30 rated design with a full gigabit high port count which allows for a more versatile implementation. There are also two wide operating temperature models for either a standard temperature range (STD: -10°C to 65°C) or an extended temperature range (EOT: -40°C to 75°C).

1.1 Product Hardware Features

System Interface and Performance

- All RJ45 ports support Auto MDI/MDI-X Function
- Embedded 16*10/100/1000Tx RJ45 ports
- Embedded 4*100/1000 SFP slots
- Store-and-forward switching architecture
- 8K MAC address table

Power Input

- DC 48~55V redundant, with a 6-pin removal terminal block
- The power input specification complies with the requirements of SELV (Safety Extra Low Voltage) and the power supply should comply with UL 61010-1 & UL 61010-2-201

Operating Temperature

- LNX-2004G-SFP: -10°C to 65°C
- LNX-2004G-SFP-T: -40°C to 75°C

Case / Installation

- IP30 protection metal housing
- DIN-Rail and wall-mount design
- Installation in a Pollution Degree 2 industrial environment
- Standalone Installation

1.2 Package Contents

- LNX-2004G-SFP(-T)
- Quick Installation Guide
- Wall mounting bracket set with screws
- DC cable- 18AWG & DC jack 5.5 x 2.1mm**Wire: White (+) / Black (-)
- RJ45 dust cover set

1.3 Safety Precaution

Attention: If the DC voltage is supplied by an external circuit, please use a protection device on the power supply input. The industrial Ethernet switch's hardware specs, ports, cabling information, and wiring installation will be described within this hardware manual.

Attention: Si la tension CC est fournie par un circuit externe, veuillez utiliser un dispositif de protection sur l'entrée d'alimentation. Les spécifications matérielles, les ports, les informations de câblage et l'installation du câblage du commutateur Ethernet industriel seront décrits dans ce manuel d'utilisation.

C1D2 Installation and Operating Instructions

These devices are open-type devices that are to be installed in an enclosure only accessible with the use of a tool, suitable for the environment.
"This equipment is suitable for use in Class I, Division 2, Groups A, B, C, and D or non-hazardous locations only."
WARNING: EXPLOSION HAZARD - Do not disconnect equipment unless power has been removed or the area is known to be non-hazardous."
WARNING: EXPLOSION HAZARD - Substitution of any components may impair suitability for Class I, Division 2."

Instructions d'installation et d'utilisation du C1D2

Ces appareils sont des appareils de type ouvert qui doivent être installés dans un boîtier accessible uniquement à l'aide d'un outil adapté à l'environnement.
«Cet équipement est conçu pour être utilisé uniquement dans les zones de classe I, division 2, groupes A, B, C et D ou non dangereuses.»
ATTENTION: RISQUE D'EXPLOSION - Ne débranchez pas l'équipement à moins que l'alimentation ait été coupée ou que la zone ne soit pas dangereuse. »
ATTENTION: RISQUE D'EXPLOSION - La substitution de tout composant peut nuire à la compatibilité avec la classe I, division 2.

Warning Labels

The caution label means that you should check certain information on the user manual when working with the device. (Shown in *Figure 1.1*)

Étiquettes d'avertissement

L'étiquette d'avertissement signifie que vous devez vérifier certaines informations du manuel d'utilisation lorsque vous travaillez avec l'appareil. (Illustré à la *figure 1.1*)

Figure 1.1 - Caution Label
Figure 1.1 - Étiquette de mise en garde

Figure 1.2 - Hot Surface Warning Label
Figure 1.2 - Étiquette d'avertissement de surface chaude

2 Hardware Description

2.1 Physical Dimensions

Figure 2.1, below, shows the physical dimensions of this product series:

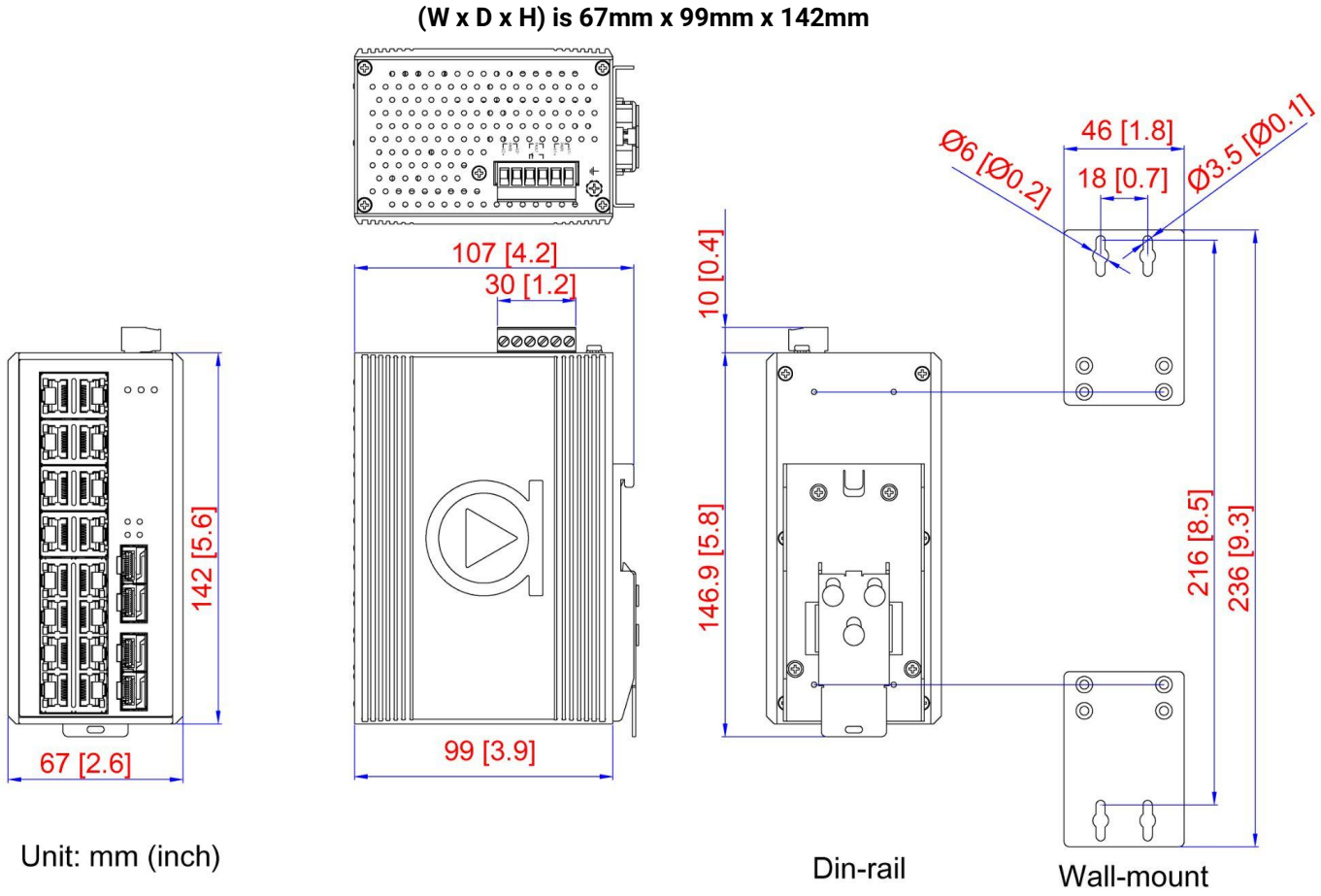

Figure 2.1 - Physical Dimensions

2.2 Front View Panel

Figure 2.2, below, shows the front panel of the product series:

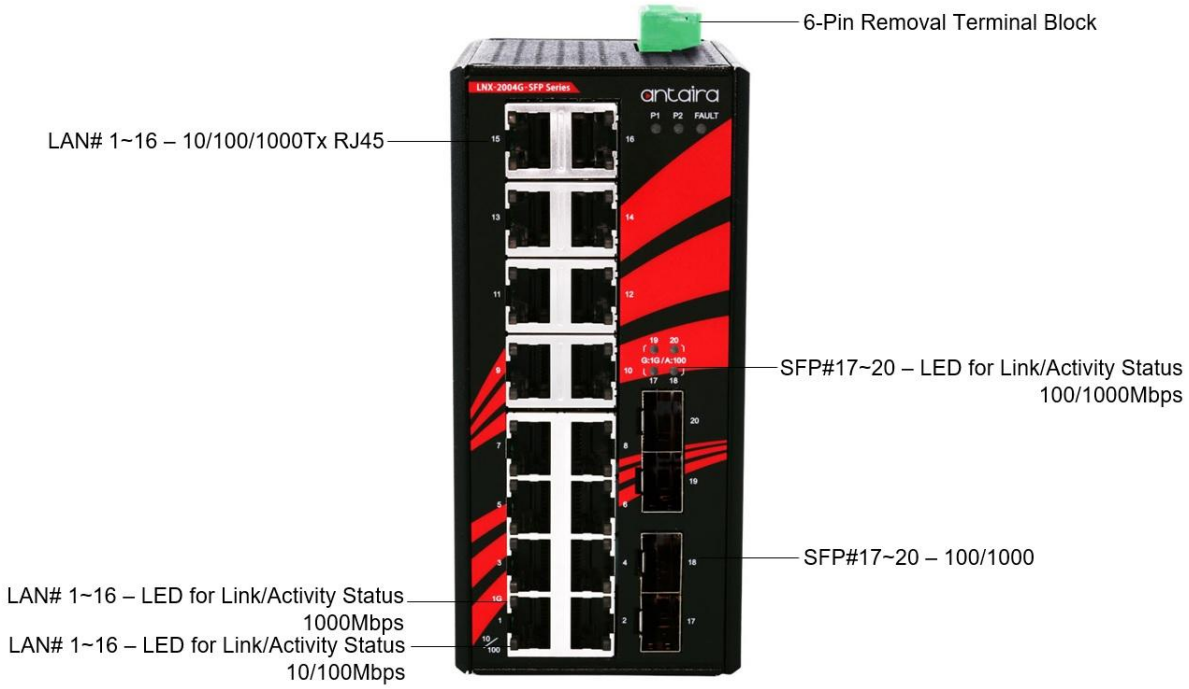

Figure 2.2 - Front View Panel

2.3 Top View Panel

Figure 2.3, below, shows the top panel of the product series:

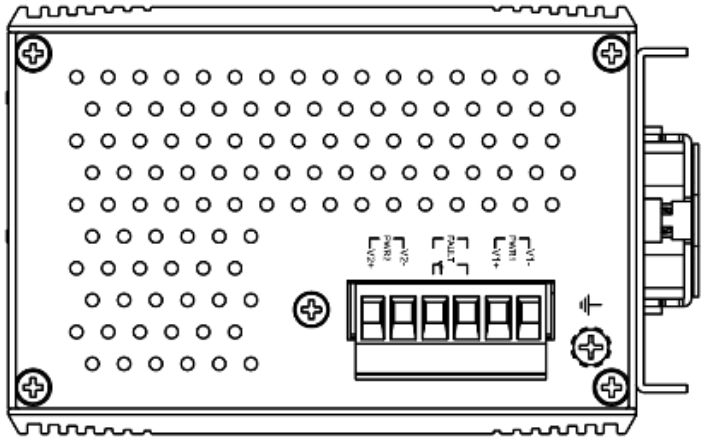

Figure 2.3 - Top View Panel

2.4 LED Indicators

There are LED light indicators located on the front panel of the industrial Ethernet switch that display the power status and network status. Each LED indicator has a different color and has its own specific meaning, see below in *Table 2.1*.

LED	Color	Description	
P1	Green	On	Power Input 1 is active
		Off	Power Input 1 is inactive
P2	Green	On	Power Input 2 is active
		Off	Power Input 2 is inactive
Fault	Red	On	Power Input 1 or 2 is inactive
		Off	Both Power Input 1 and 2 are active
LAN Port 1~16 (Upper LED)	Green	On	Connected to network, 1000Mbps
		Flashing	Networking is active
		Off	Not connected to network
LAN Port 1~16 (Lower LED)	Green	On	Connected to network, 10/100Mbps
		Flashing	Networking is active
		Off	Not connected to network
SFP Port 17~20	Green	On	Connected to network, 1000Mbps
		Flashing	Networking is active
		Off	Not connected to network
	Amber	On	Connected to network, 10/100Mbps
		Flashing	Networking is active
		Off	Not connected to network

Table 2.1 - LED Indicators

Note: *"P1" is the abbreviation for "Power 1", "P2" is for "Power 2", "LNK" is for "Link", and "ACT" is for "Activity".*

2.5 Ethernet Ports

- **RJ45 Ports**

RJ45 Ports (Auto MDI/MDI-X): The RJ45 ports are auto-sensing for 10Base-T, 100Base-TX, or 1000Base-T connections. Auto MDI means that the switch can connect to another switch or workstation without changing the straight-through or crossover cabling. See the figures below for straight-through and crossover cabling schematics.

- **RJ45 Pin Assignments**

Crossover Cable		Straight Through Cable	
Pin Number / Signal	**Pin Number / Signal**	**Pin Number / Signal**	**Pin Number / Signal**
1 / RX+	3 / TX+	1 / RX+	1 / TX+
2 / RX-	6 / TX-	2 / RX-	2 / TX-
3 / TX+	1 / RX+	3 / TX+	3 / RX+
6 / TX-	2 / RX-	6 / TX-	6 / RX-

Table 2.2 - 10/100Base-T(X) RJ45 Pin Assignments

Crossover Cable		Straight Through Cable	
Pin Number / Signal	**Pin Number / Signal**	**Pin Number / Signal**	**Pin Number / Signal**
1 / TP0+	3 / TP1+	1 / TP0+	1 / TP1+
2 / TP0-	6 / TP1-	2 / TP0-	2 / TP1-
3 / TP1+	1 / TP0+	3 / TP1+	3 / TP0+
4 / TP2+	7 / TP3+	4 / TP2+	4 / TP3+
5 / TP2-	8 / TP3-	5 / TP2-	5 / TP3-
6 / TP1-	2 / TP0-	6 / TP1-	6 / TP0-
7 / TP3+	4 / TP2+	7 / TP3+	7 / TP2+
8 / TP3-	5 / TP2-	8 / TP3-	8 / TP2-

Table 2.3 - 1000Base-T RJ45 Pin Assignments

Note: *"+" and "-" signs represent the polarity of the wires that make up each wire pair.*

2.6 Cabling

Use the four twisted-pair, category 5e, or the above cabling for the RJ45 port connections. The cable between the switch and the link partner (switch, hub, workstation, etc.) must be less than 100 meters (328 ft.) in length.

The small form-factor pluggable (SFP) is a compact optical transceiver used in optical communications for both telecommunication and data communication applications.

Caution: Please employ an optional optical transceiver (SFP/Fixed Fiber) that complies with IEC 60825-1, 21 CFR 1040 Section 1040.10 and 1040.11, classified as Class 1 laser product.

Attention: Veuillez utiliser un émetteur-récepteur optique en option (SFP/fibre fixe) conforme à la norme IEC 60825-1, 21 CFR 1040 Section 1040.10 et 1040.11, classé comme produit laser de classe 1.

2.7 Wiring the Power Inputs

Caution: Please follow the steps below when inserting the power wire.

Attention: Veuillez suivre les étapes ci-dessous lors de l'insertion du câble d'alimentation.

1. Insert the positive and negative wires into the PWR1 (V1+, V1-) and PWR2 (V2+, V2-) contacts on the terminal block connector as shown below in *Figure 2.6*.

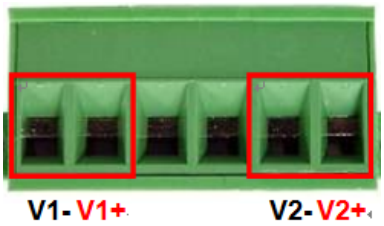

Figure 2.6 - Power Terminal Block

2. Tighten the wire-clamp screws to prevent the wires from loosening, as shown below in *Figure 2.7*.

Figure 2.7 - Power Terminal Block

Caution:

*Only use copper conductors, **125°C**, tighten to **5 lbs.***

*The wire gauge for the terminal block should range between **18~20 AWG**.*

Attention:

*Utilisez uniquement des conducteurs en cuivre, **125°C**, serrez à **5 lb.***

*Le calibre des fils du bornier doit être compris entre **18** et **20 AWG.***

2.8 Wiring the Fault Alarm Contact

The fault alarm contact is in the middle of the terminal block connector as the picture shows below in *Figure 2.8*. By inserting the wires, it will detect the fault status including power failure or port link failure (managed industrial switch only), and form a normal open circuit. An example is shown below in *Figure 2.8*.

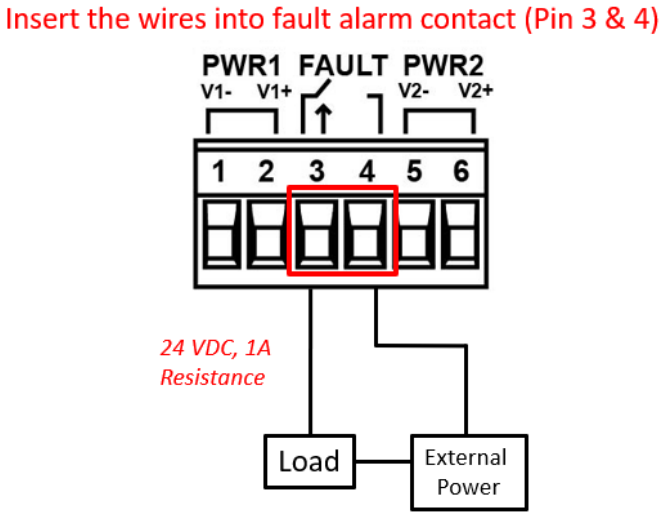

Figure 2.8 - Wiring the Fault Alarm Contact

Caution:

The wire gauge for the terminal block should range between 12 ~ 24 AWG.

If only using one power source, jumper Pin 1 to Pin 5 and Pin 2 to Pin 6 to eliminate power fault alarm.

Attention:

Le calibre des fils du bornier doit être compris entre 12 et 24 AWG.

Si vous n'utilisez qu'une seule source d'alimentation, connectez les broches 1 à 5 et les broches 2 à 6 pour éliminer l'alarme de panne de courant.

2.9 Grounding Note

Grounding and wire routing help limit the effects of noise due to Electromagnetic Interference (EMI). Run the ground connection from the ground screw to the grounding surface prior to connecting devices. The grounding screw symbol is shown below in *Figure 2.9*.

Figure 2.9 - Grounding Screw Symbol

Caution: Using a shielded cable achieves better electromagnetic compatibility.

Attention: L'utilisation d'un câble blindé permet une meilleure compatibilité électromagnétique

3 Mounting Installation

3.1 DIN-Rail Mounting

The DIN-Rail is pre-installed on the industrial Ethernet switch from the factory. If the DIN-Rail is not on the industrial Ethernet switch, please see *Figure 3.1* to learn how to install the DIN-Rail on the switch.

Follow the steps below to learn how to hang the industrial Ethernet switch:

1. Use the screws to install the DIN-Rail bracket on the rear side of the industrial Ethernet switch.

   Caution: The torque for tightening the screws on the device is 3.5 in-lbs.

   Attention: Le couple de serrage des vis sur l'appareil est de 3.5 pouces-livres.

2. To remove the DIN-Rail bracket, do the opposite from step 1.
3. After the DIN-Rail bracket is installed on the rear side of the switch, insert the top of the DIN- Rail on to the track as shown below in *Figure 3.2*.
4. Lightly pull down the bracket onto the rail as shown below in *Figure 3.3*.
5. Check if the bracket is mounted tightly on the rail.
6. To remove the industrial Ethernet switch from the rail, do the opposite from the above steps.

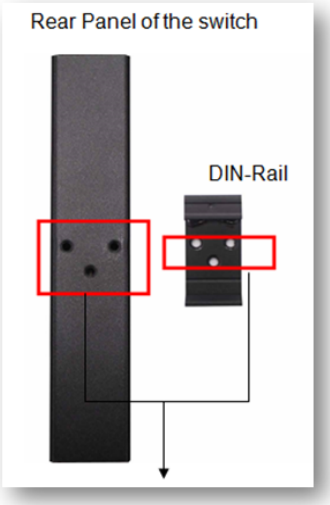

Figure 3.1 - Rear View of the Switch and DIN-Rail

Figure 3.2 - Insert the Switch on the DIN-Rail

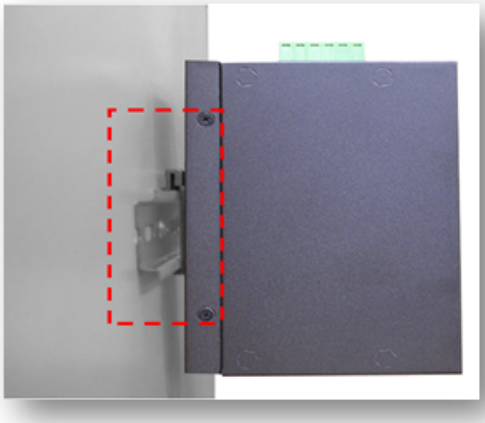

Figure 3.3 - Stable the Switch on the DIN-Rail

3.2 Wall Mounting

Follow the steps below to mount the industrial Ethernet switch using the wall mounting bracket as shown below in *Figure 3.4*.

Caution: “Wall” means industrial control panel wall

Attention: “Wall” signifie mur de panneau de commande industriel

1. Remove the DIN-Rail bracket from the industrial Ethernet switch by loosening the screws.
2. Place the wall mounting brackets on the top and bottom of the industrial Ethernet switch.
3. Use the screws to screw the wall mounting bracket on the industrial Ethernet switch.

   Caution: The torque for tightening the screws on the device is 3.5 in-lbs.

   Attention: Le couple de serrage des vis sur l'appareil est de 3.5 pouces-livres.

4. Use the hook holes at the corners of the wall mounting bracket to hang the industrial Ethernet switch on the wall.
5. To remove the wall mount bracket, do the opposite from the steps above.

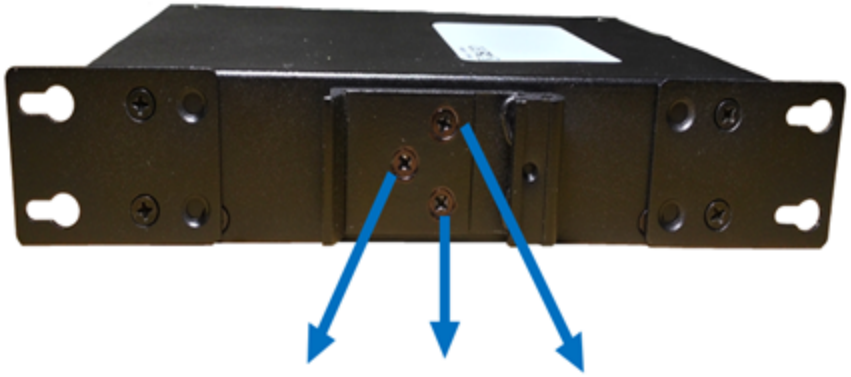

Figure 3.4 - Remove DIN-Rail bracket from the Switch

Below, in *Figure 3.5* are the dimensions of the wall mounting bracket.

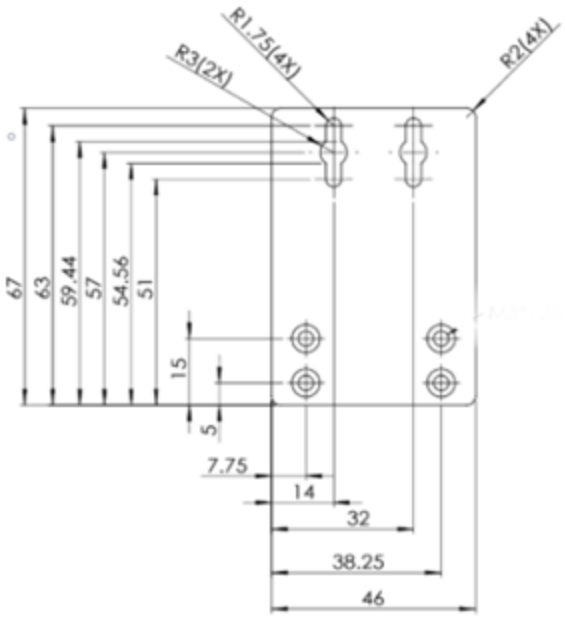

Figure 3.5 - Wall Mounting Bracket Dimensions

4 Hardware Installation

4.1 Installation Steps

This section will explain how to install the industrial Ethernet switch:

Caution: This device is intended for indoor use.

Attention: Cet appareil est destiné à une utilisation en intérieur.

Caution: The device is intended to be installed in an industrial control enclosure and panel.

Attention: L'appareil est destiné à être installé dans une armoire de commande et un panneau industriels.

Installation Steps

1. Unpack the industrial Ethernet switch from the original packing box.
2. Check if the DIN-Rail bracket is screwed on the industrial Ethernet switch.
   - If the DIN-Rail is not screwed on the industrial Ethernet switch, please refer to the **DIN-Rail Mounting** section for DIN-Rail installation.
   - If it is required to wall mount the industrial Ethernet switch, please refer to the **Wall Mounting** section for wall mounting installation.
3. To hang the industrial Ethernet switch on a DIN-Rail or wall, please refer to the **Mounting Installation** section.
4. Power on the industrial Ethernet switch and then the power LED light will turn on.
   - For the help on how to wire power, please refer to the **Wiring the Power Inputs** section.
   - Please refer to the **LED Indicators** section for LED light indication.
5. Prepare the twisted-pair, straight-through category 5 cable for Ethernet connection.
6. Insert one side of the RJ45 cable into the switch's Ethernet port and on the other side into the networking device's Ethernet port, e.g. switch PC or server.
   - The Ethernet port's (RJ45) LED on the industrial Ethernet switch will turn on when the cable is connected to the networking device.
   - Please refer to the **LED Indicators** section for LED light indication.
7. When all connections are set and the LED lights all show normal, the installation is complete.

4.2 Maintenance and Service

- If the device requires servicing of any kind, the user is required to disconnect and remove it from its mounting. The initial installation should be done in a way that makes this as convenient as possible.
- Voltage / Power lines should be properly insulated as well as other cables. Be careful when handling them so as to not trip over.
- Do not under any circumstance insert foreign objects of any kind into the heat dissipation holes located in the different faces of the device. This may not only harm the internal layout, but might cause harm to users as well.
- Do not under any circumstance open the device for any reason. Please contact your dealer for any repair needed or follow the instructions within the manual.
- Clean the device with dry soft cloth.

4.3 Troubleshooting

- Always verify the right power cord or adapter is being used. Never use a power supply or adapter with a non-compliant DC output voltage or it will burn the equipment.
- Select the proper UTP or STP cable in order to construct the network. Use an unshielded twisted-pair (UTP) or shield twisted-pair (STP) cable for RJ45 connections: 100Ω Category 5e for 10/100Mbps. Also be sure that the length of any twisted-pair connection does not exceed 100 meters (328 feet).
- Diagnosing LED Indicators: To assist in identifying problems, the switch can be easily monitored with the LED indicators which help to identify if any problems exist.
    - Please refer to the LED Indicators section for LED light indication.
- If the power indicator LED does not turn on when the power cord is plugged in, the user may have a problem with the power cord. Check for loose power connections, power losses or surges at the power outlet.
    - Please contact Antaira for technical support service if the problem still cannot be resolved.
- If the industrial switch LED indicators are normal and the connected cables are correct but the packets still cannot transmit, please check the system's Ethernet devices' configuration or status.

Antaira Customer Service and Support

(Antaira US Headquarter) + 844-268-2472

(Antaira Europe Office) +48-22-862-88-81

(Antaira Asia Office) +886-2-2218-9733

Please report any problems to Antaira:

www.antaira.com / support@antaira.com

www.antaira.eu / info@antaira.eu

www.antaira.com.tw / info@antaira.com.tw

Any changes to this material will be announced on the Antaira website.