S101NT

10.1" Edge-AI Rugged Tablet with NVIDIA Jetson Orin Nano

KEY FEATURES

- Edge-AI Rugged Tablet with NVIDIA Jetson Orin Nano
- 1920 x 1200 WUXGA with PCAP touch
- Sunlight readable with anti-glare solution
- IP65 water and dust proof with MIL-STD-810H rugged housing
- 2MP Webcam , 8MP Rear Camera
- Removable battery with hotswap function for all day productivity
- Ethernet thru Giga LAN (RJ45)
- Expansion port for add-on modules

INTRODUCTION

Winmate S101NT is a 10.1-inch Edge-AI Rugged Tablet with NVIDIA Jetson Orin Nano engineered for defense operations, field command, and mission-critical mobility. It combines NVIDIA Jetson Orin Nano The S101NT is a premium 10, 10.1-inch display with 1920x1200 resolution, and IP65 to support reliable operation in harsh industrial environments. With MIL-STD-810H, the S101NT helps OEMs, system integrators, and project teams deploy durable, configurable solutions for demanding field, factory, and mission-critical applications.

SPECIFICATIONS

Display

Resolution	1920x1200	**Size**	10.1 inches
Contrast Ratio	800:1	**Panel Brightness**	800.0 nits
View Angles	85,85,85,85	**Bonding**	Optical Bonding for Sunlight Viewability
Type	Projected Capacitive Multi Touch	**Viewability**	Anti-Glare touch treatment
Touch Mode	Support Hand/Rain, Stylus, Glove Mode		

System Specification

Processor	NVIDIA Jetson Orin Nano 8GB	**Memory**	8GB on Orin Nano SOM
Storage	128GB SSD (Default) 256GB SSD (Optional) 512GB SSD (Optional) 1TB SSD (Optional) 2TB SSD (Optional)	**Security**	Trusted Platform Module (TPM) 2.0 Kensington Lock
Operating System	Jetpack 6.2 Operating System	**WLAN**	Support
BT	Support	**WWAN**	4G (Optional) 5G (Optional)
GNSS	GPS, GLONASS	**Sensors**	Light sensor/ G-sensor / Gyro

Camera

Front Camera	2MP Front Camera	**Rear Camera**	8MP Rear Camera

Mechanical

Dimension	272 x 192 x 25 mm	**Weight**	1.1 kg
Cooling System	Fan Design		

IO Ports

USB Port	1 x USB 3.0 (Type A), 1 x USB 3.0 (Type-C support Power Delivery 20V In)	**SD Card Slot**	1 x Micro SDXC slot
SIM Card Slot	1 x Nano SIM card slot	**Audio**	1 x Audio combo 3.5mm audio combo jack (Mic in or Line Out) Dual Mic Built-in Microphone Single Speaker
Expansion Port	1 x Expansion Connector for USB3.0 / UART (Optional)	**LAN**	1 x RJ45-10/100/1000 GigaLAN port
Indicator	2x LED Indicator for Power, Battery	**Docking Connector**	1 x 19-pin docking connector

Environment

Operating Humidity	10% to 90% RH, non-condensing	**Operating Temperature**	-20°C to 60°C
Storage Temperature	-30°C to 70°C (-22°F to 158°F)	**Shock**	MIL-STD-810H Method 516.8 Procedure I
Vibration	MIL-STD-810H Method 514.8 Procedure I	**IP rating**	IP65
Drop	MIL-STD-810H Method 516.8, 4 ft		

Certification

Certification	CE, FCC

Security Function

SOTI MobiControl	SOTI MobiControl Compliance	**Kensington Lock**	Kensington Lock Support

Control

Button	1 x Power 2 x Programmable function Keys

Power

Battery	Hot-swappable 11.4V, typ. 3500 mAh Li-Ion Re-chargeable Battery (3S1P) 11.4V, typ. 4750 mAh Li-Ion Re-chargeable Battery (3S1P) (Optional)	**Power Rating**	19V DC
Adapter	100-240V, 50-60Hz / 19V DC		

Accessory

Accessory	Adapter and Power Cord Standard Battery	**Optional Accessory**	Vehicle Charger (Optional) Vehicle Dock (Optional) Desk Dock (Optional) Battery Charger (Optional) Hand Strap (Optional) Shoulder Strap (Optional) Carry Bag (Optional) Stylus (Optional)

Barcode Scanner

Barcode Scanner	1D/2D barcode reader (Optional)

DIMENSIONS UNIT:MM

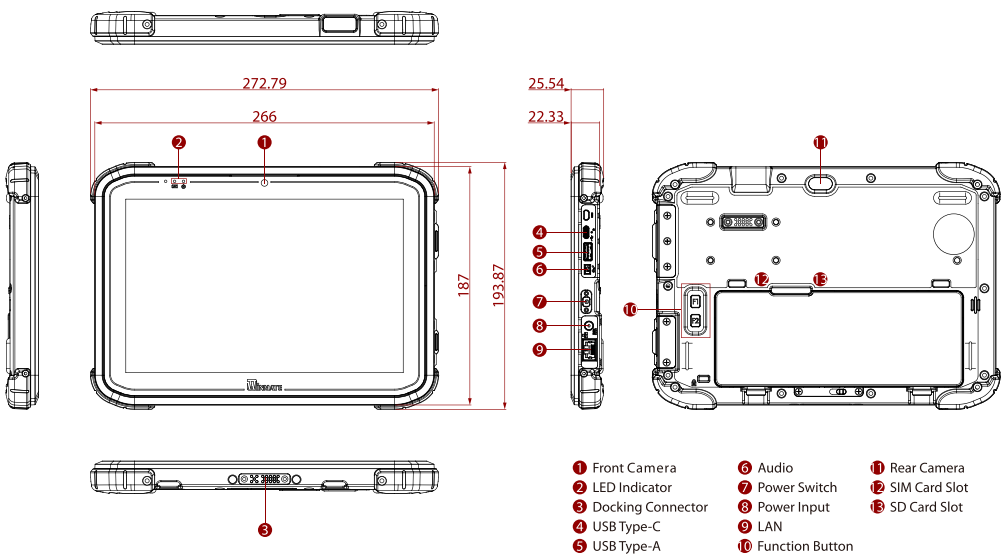

NOTE

1. This is a simplified drawing, and some components are not marked in detail.
2. Please contact our sales representative if you need further product information.
3. All specifications are subject to change without prior notice.
4. The product shown in this datasheet is a standard model. For diagrams that contain customized or optional I/O, please contact the Winmate Sales Team for more information.

* Some images or content on this page are created or enhanced using generative AI technology. All AI-generated content has been reviewed before publication.

No. 18, Zhongxing S. St., Sanchong Dist., New Taipei City 241017 , Taiwan (R.O.C.)
Tel: +886-2-8511-0288
Website: www.winmate.com

Revised:V.260323.260924